DPX³ 160 equipment and mounting accessories



4 210 40



4 210 36

Pack	Cat.Nos	Equipment for plug-in version
		A plug-in version DPX³ is a fixed version DPX³ mounted on a plug-in base
		Plug-in bases for DPX³ 160
		Front or rear terminal mounting base
1	4 210 40	For DPX³ 160 - 3P
1	4 210 41	For DPX³ 160 - 4P with or without earth leakage module
		Connectors for auxiliary contacts
1	4 210 44	Set of connectors
		Padlocks for plug-in base
1	4 210 45	Key barrel and flat key N° ABA90GEL6149
1	4 210 46	Key barrel and star key N° HBA90GPS6149
1	4 210 47	Padlock accessory
		Connection accessories
		High capacity cage terminals
		For Cu/Al cables, 1 x 120 mm² for flexible cables and 1 x 150 mm² for rigid cable and 18 mm bars
1	4 210 26	Set of 3 terminals
1	4 210 27	Set of 4 terminals
		Cage terminals
		For Cu/Al cables, 1 x 70 mm² for flexible cables and 1 x 95 mm² for rigid cables and 14 mm bars
1	4 210 93	Set of 3 terminals
1	4 210 94	Set of 4 terminals
		Insulated shields
1	4 210 70	Set of 3 insulated shields
		Screw terminals for bars connection
		For copper bars
1	4 210 28	Set of 3 terminals
1	4 210 29	Set of 4 terminals
		Spreaders
		For incoming bars or cable lugs
1	4 210 32	Set of 3 spreaders for DPX³ 160 3P
1	4 210 33	Set of 4 spreaders for DPX³ 160 4P
		Rear terminals
		Flat swivel terminals
		Used to convert a fixed version with front terminals to a fixed version with rear terminals
1	4 210 36	Set of 3 rear terminals for DPX³ 160 3P
1	4 210 37	Set of 4 rear terminals for DPX³ 160 4P
		Sealable terminal shields
		For front terminals
1	4 210 54	For DPX³ 160 3P
1	4 210 55	For DPX³ 160 3P
		For rear terminals
1	4 210 50	For DPX³ 160 3P
1	4 210 51	For DPX³ 160 4P
		Fixing plates
		For fixing DPX³ 160 on ⊔ rail or on plate
1	4 210 71	For DPX³ 160 3P/4P without earth leakage module
1	4 210 73	For DPX³ 160 4P with earth leakage module
1	4 210 68	For DPX³ 160 3P/4P with side mounting motor operator

Connection

Direct connection

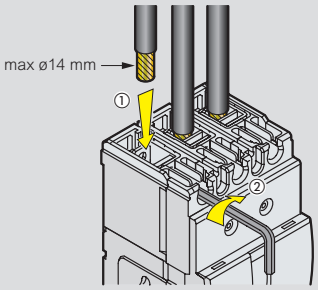

Flexible
1,5 ⟶ 70 mm²
#16 ⟶ #2/0 AWG
or
Solid
1,5 ⟶ 95 mm²
#16 ⟶ #4/0 AWG

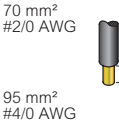

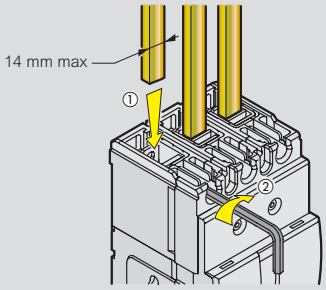

Spreaders

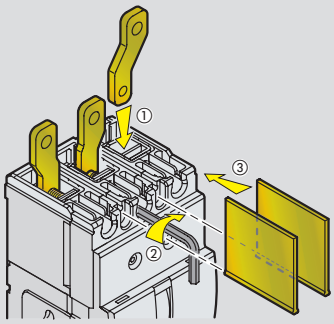

Rear terminals

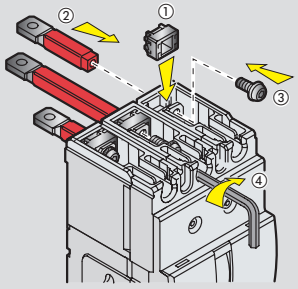

Sealable terminal shield

