DIGITUS® Cable Management Panel

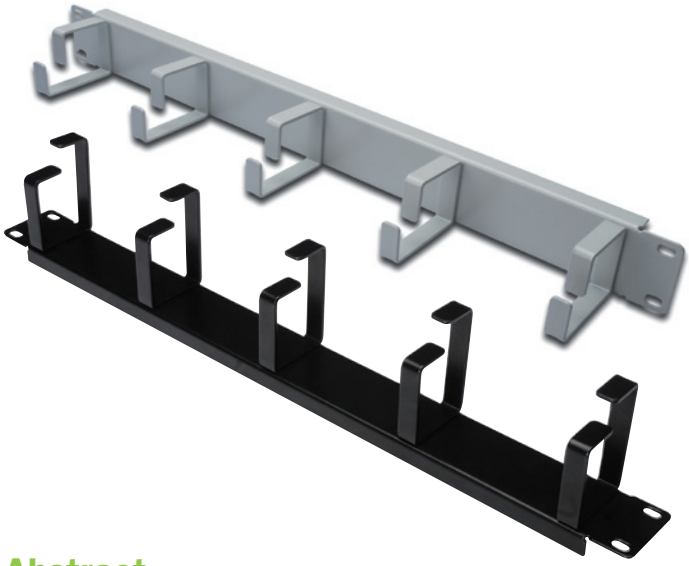

- ✓ 15 Year Product Warranty
- ✓ 25 Year System Warranty
- ✓ 19 Inch rack mountable

Abstract

DIGITUS® 1U Cable Management Panel 5 rings 40x60mm

Features

- Management of patch cables
- Available in grey and black color

Product Overview

DIGITUS® cable management panels are designed and produced to fit in 19" racks and cabinets. The panels are available in black RAL 9005 and light grey RAL 7035. The advantage of the cable management panel is to organize and manage the patch cables in the rack; moreover it helps to reduce the cable tangle. It is a big benefit due to the concept of structured caballing.

Part Number Information Cable Management Panel

DN-97601	DIGITUS® 1U Cable Management Panel 5 rings 40x60mm Color grey RAL 7035
DN-97602	DIGITUS® 1U Cable Management Panel 5 rings 40x60mm Color black RAL 9005

DIGITUS® Cable Management Panel

Technical Information

Material Information	DIN EN 10130 – 99 DC-01 6112 CRS
Body Thickness	1.0 mm
Ring Thickness	2.5 mm
Surface Treatment	Fosfat coating
Painting	RAL 9005, RAL 7035
Compliances	UL and cUL
Standards	ISO 9001:2000, TSE:EN 61587-1 Mechanical Structures for Electronic Equipment – Tests for IEC 60917 and IEC 60297 Climatic and Environment EN 61587-1/4.2, IEC60068-2-1, IEC60068-2-2, IEC60068-2-30, Flammability EN61587-1/6.3

Technical Drawing

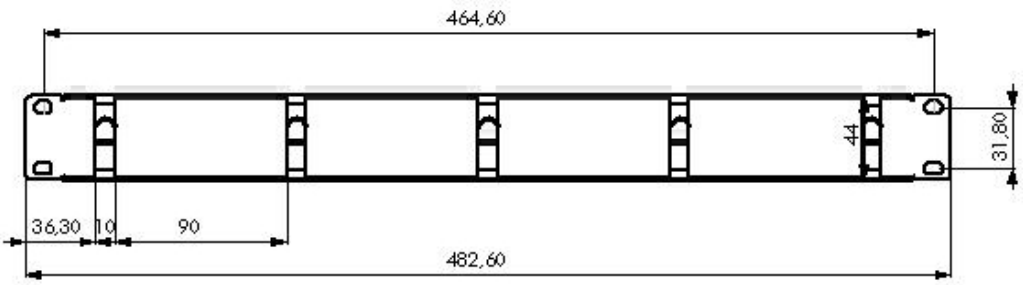

Front View

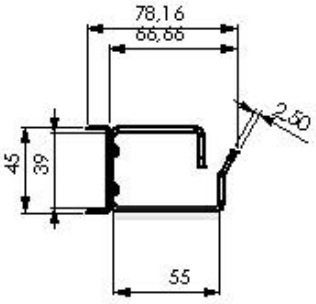

Side View

System Warranty

The DIGITUS® System Warranty provides 25-year product and applications assurance of compliance with the industry performance standard appropriate to the class of cabling installed. The System Warranty will be applied by a certified DIGITUS® Partner who has installed the said system.



DIGITUS® is made for high demand IT-Infrastructure Solutions – designed and developed on highest standard in Germany.

DIGITUS® is a registered Brand Name of ASSMANN Electronic GmbH