DIGITUS® WALL MOUNT ENCLOSURE
520x400mm (WxD) – unmounted

Product Picture:



Product Description:

The DIGITUS® Compact Series is a range of 19" wall mount enclosures developed for installation of both cabling and equipment. The enclosures are special designed to save a lot of space and are ideal for use a wide range of applications in the 19" area. The enclosures are designed for an optimal performance and come with a lot of features like quick release front door and fully adjustable profiles. The access on the top and the base of each cabinet makes the installation of the cabling very flexible, easy and time-saving. A full range of DIGITUS® accessories are available to complete the installation of the wall mounting cabinets with professional products. The enclosure will be shipped unmounted in a “Flat-Pack Design”, this reduces shipping costs.

the wall mount enclosures are available on request in black color RAL 9005

DIGITUS® WALL MOUNT ENCLOSURE
520x400mm (WxD) – unmounted

Item Number Information – 520x400mm:

Article No	Description		
DN-19 07U-S-1	DIGITUS® 7U SoHo Wall Mount Enclosure	unmounted 360x520x400mm	color grey RAL 7035
DN-19 09-U-S-1	DIGITUS® 9U SoHo Wall Mount Enclosure	unmounted 512x520x400mm	color grey RAL 7035
DN-19 12-U-S-1	DIGITUS® 12U SoHo Wall Mount Enclosure	unmounted 581x520x400mm	color grey RAL 7035

Product Details:

- 1.1 – 1.5mm strong sheet steel with high load capacity
- sheet steel powder coated
- IP 20 rating
- toughened safety glass door, lockable
- ventilation slots for active and passive ventilation and exhaustion
- 483mm (19") profile rails on the front side, adjustable in depth
- cable entry on top with brush and bottom with plastic cover
- inclusive 8 pieces mounting screws
- color: light grey, RAL 7035
- Dimensions (WxD): 520x400mm
- inclusive 2 pieces of keys

Standards:

• ISO 9001:2008	Quality Management System
• ISO 14001:2004	Environmental Management System
• 19" IEC 297-1	Mounting
• EN 61587-1	Mechanical Structures (Cabinets for Electronic equipment)

Equipment

Shelf (fixed):

DN-97609	DIGITUS® 1U Shelf	color grey RAL 7035	250x44mm (DxH)	15 kg loading capacity
DN-19 TRAY-1-SW	DIGITUS® 1U Shelf	color black RAL 9005	250x44mm (DxH)	15 kg loading capacity
DN-97610	DIGITUS® 2U Shelf	color grey RAL 7035	370x88mm (DxH)	20 kg loading capacity
DN-19 TRAY-2-SW	DIGITUS® 2U Shelf	color black RAL 9005	370x88mm (DxH)	20 kg loading capacity

Roof Cooling Unit:

DN-19 FAN-2-WM-N	Roof Cooling Unit, 2 Fans, with Switch inclusive Thermostat, color grey RAL 7035
DN-19 FAN-2-WM-BN	Roof Cooling Unit, 2 Fans, with Switch inclusive Thermostat, color black RAL 9005

the wall mount enclosures are available on request in black color RAL 9005

DIGITUS® WALL MOUNT ENCLOSURE
520x400mm (WxD) – unmounted

Rack Mount Cooling Unit:

DN-19 FAN-2-HO	1U Rack Mount Cooling Unit, 2 Fans, with Switch incl. Thermostat, color grey RAL 7035
DN-19 FAN-2-HO-SW	1U Rack Mount Cooling Unit, 2 Fans, with Switch incl. Thermostat, color black RAL 9005
DN-19 FAN-4-HO	1U Rack Mount Cooling Unit, 4 Fans, with Switch incl. Thermostat, color grey RAL 7035
DN-19 FAN-4-HO-SW	1U Rack Mount Cooling Unit, 4 Fans, with Switch incl. Thermostat, color black RAL 9005

Substitute Fan:

DN-19 FAN	Fan for Roof Cooling Unit and Rack Mount Cooling Unit

Cable Management Panel:

DN-97601	1U Cable Management Panel, 5 pcs metal rings (40x60mm), color grey RAL 7035
DN-97602	1U Cable Management Panel, 5 pcs metal rings (40x60mm), color black RAL 9005
DN-19 ORG-2U	2U Cable Management Panel, 5 pcs metal rings (80x60mm), color grey RAL 7035
DN-19 ORG-2U-SW	2U Cable Management Panel, 5 pcs metal rings (80x60mm), color black RAL 9005

Cable Management Rings:

DN-19 ORG-1	1U Cable Management Ring metal (44 x 60 mm), Set 10 pcs, color grey RAL 7035
DN-19 ORG-1-SW	1U Cable Management Ring metal (44 x 60 mm), Set 10 pcs, color black RAL 9005

Cable Put Through Panel:

DN-19 ORG-3U	1U Front Patch Cord Access Hole Panel with brush, color grey RAL 7035
DN-19 ORG-3U-SW	1U Front Patch Cord Access Hole Panel with brush, color black RAL 9005

Fixing Set:

DN-19 SET	Fixing Set, M6 screws, M6 nuts, M6 washer, 50 pcs, color black
DN-19 SET-S	Fixing Set, M6 screws, M6 nuts, M6 washer, 50 pcs, color silver

Potential Equalisation Panel:

DN-19 EARTH	Earthing Leads & potential, 6 Earthing leads with copper Busbar

Blank Panel:

DN-97612	1U Blank Panel, color grey RAL 7035
DN-19 BPN-01-SW	1U Blank Panel, color black RAL 9005
DN-97613	2U Blank Panel, color grey RAL 7035
DN-19 BPN-02-SW	2U Blank Panel, color black RAL 9005

the wall mount enclosures are available on request in black color RAL 9005

DIGITUS® is a registered Brand Name of ASSMANN Electronic GmbH

DIGITUS® WALL MOUNT ENCLOSURE
520x400mm (WxD) – unmounted

Lightning Fixture:

DN-19 LIGHT-2	1U Lightning Fixture LED, with door switch

PDU:

DN-95401	1U PDU, 8 x Schuko, 2 m connection cable with Schuko plug
DN-95402	1U PDU, 7 x Schuko, Switch, 2 m connection cable with Schuko plug
DN-95403	1U PDU, 7 x Schuko, Switch, Overload protection, 2 m connection cable with Schuko plug
DN-95407	1U PDU, 7 x Schuko, Switch, Overvoltage protection, 2 m connection cable with Schuko plug

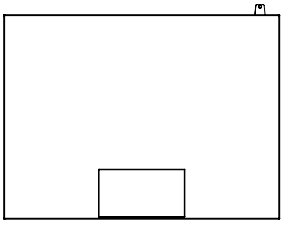

BOTTOM VIEW

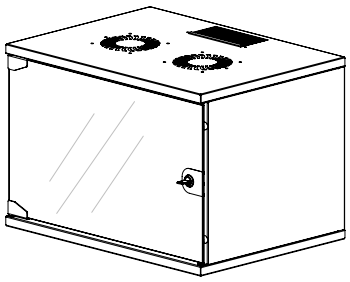

ISOMETRIC VIEW

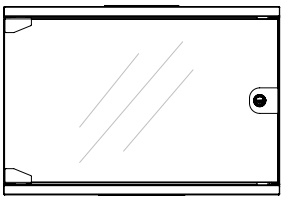

FRONT VIEW

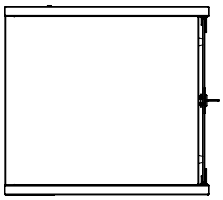

SIDE VIEW

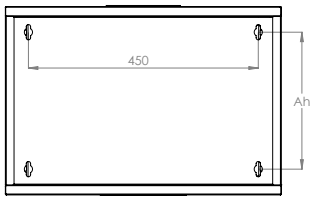

REAR VIEW

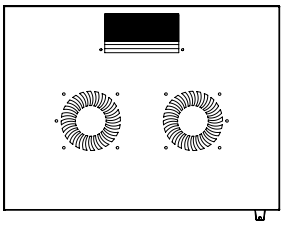

TOP VIEW

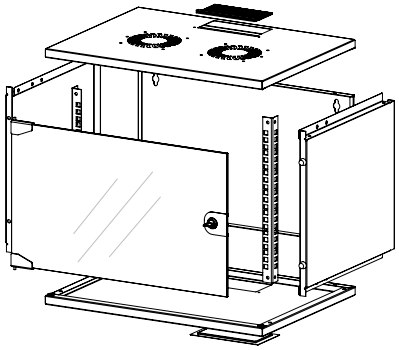

EXPLODED VIEW

the wall mount enclosures are available on request in black color RAL 9005

DIGITUS® WALL MOUNT ENCLOSURE

520x400mm (WxD) – unmounted

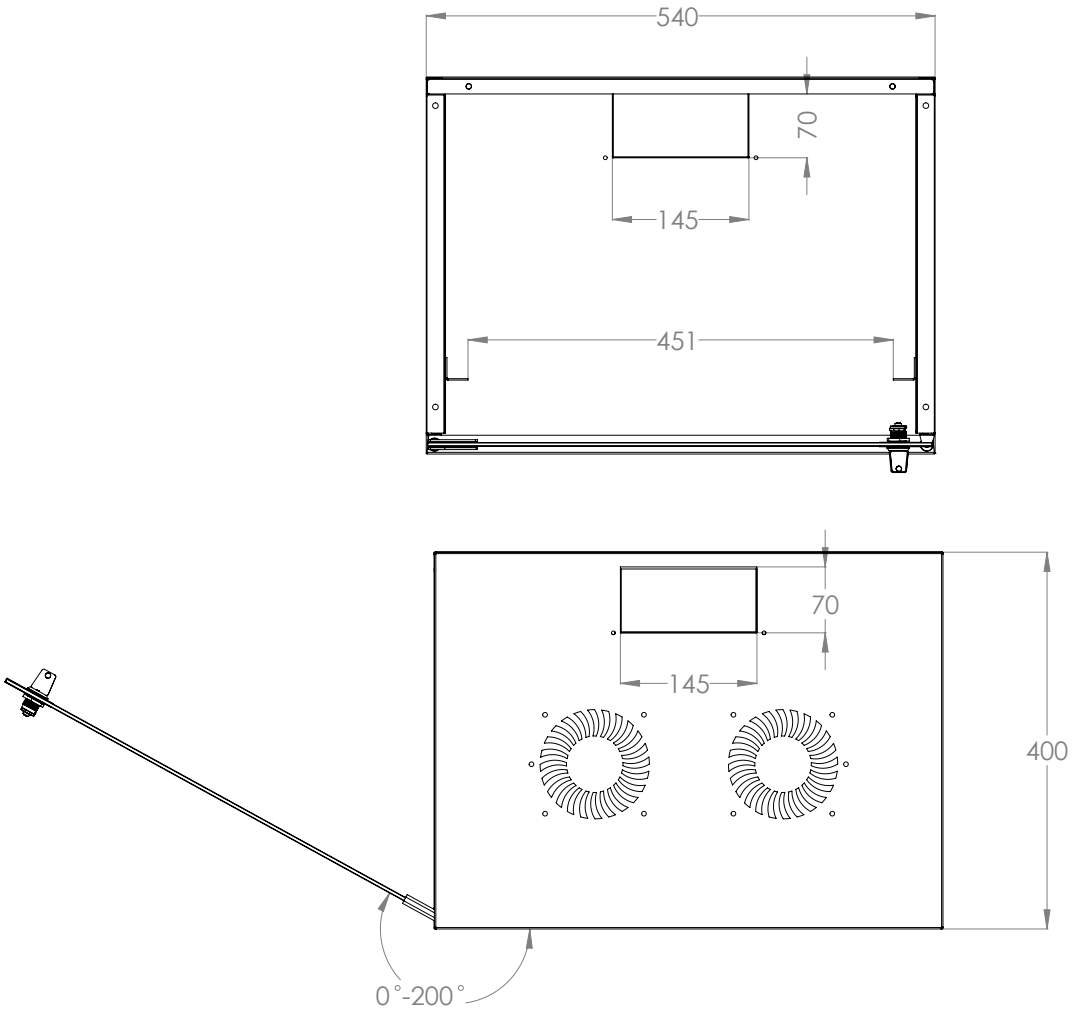

the wall mount enclosures are available on request in black color RAL 9005