Fixings for 50 mm width tray
UC50 – CAT30 – CAT40 30 → 54mm 50 mm
CM50 54 mm 50 mm

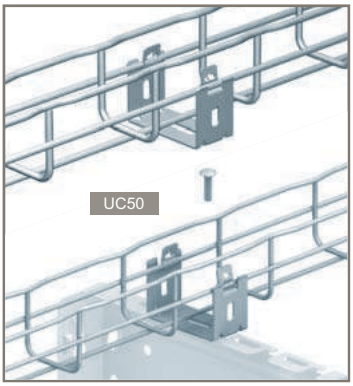

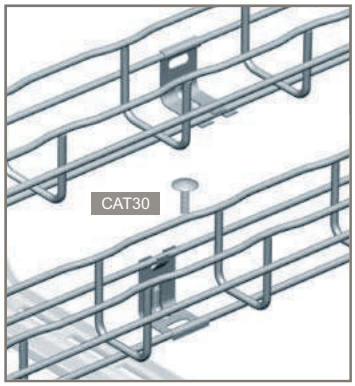

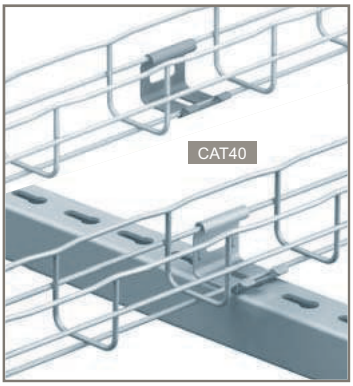

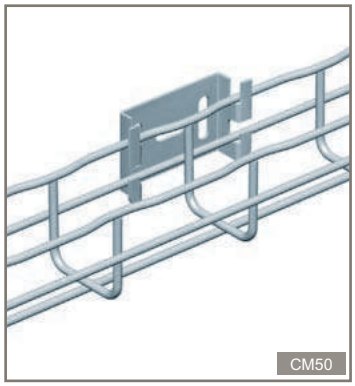

For technical data, refer to Cablofil's mounting guide

NOTE : please use Cat. No. when placing your order

Pack	Cat. Nos.		
	GS	GC	
1	CM586040	CM586043	12
	304L	316L	
1	CM586048	CM586044	12

UC50 – support cradles

For 50 mm tray widths and for 30 mm and 54 mm depths

F daN 12

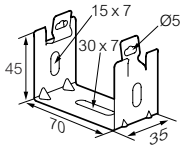

Pack	Cat. Nos.	
	GS	GC
1	CM586050	CM586057

CAT30 – cantilever arm fixing plates

Used to fix 50 mm width tray to cantilever arms

F daN 20

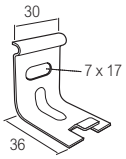

Pack	Cat. Nos.		
	GS	DC	
1	CM586190	CM586197	20
	304L	316L	
1	CM586198	CM586194	20

CAT40 – channel fixing plates

Used to fix 50 mm width tray to channel

F daN 20

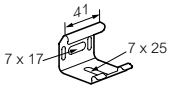

Pack	Cat. Nos.		
	GS	GC	
1	CM586060	CM586063	100
	304L	316L	
1	CM586068	CM586064	100

CM50 – universal mounting plates (small)

Can be used for horizontal or vertical mounting of tray runs

F daN 100

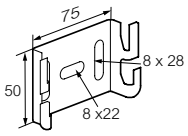

All dimensions (mm) are nominal

Fixings for 50 mm width tray
UC50 – CAT30 – CAT40 – CM50
assembly

■ UC50 – support cradle

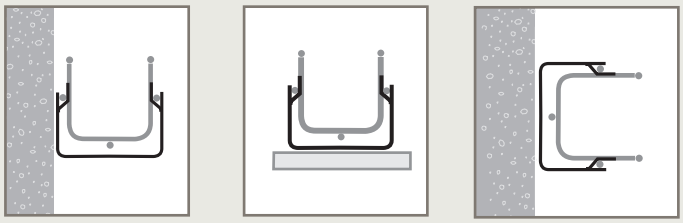

■ CAT30 – channel fixing plates

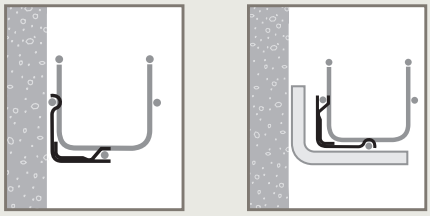

■ CAT40 – channel fixing plates

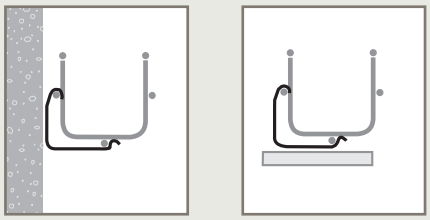

■ CM50 – universal mounting plates (small)

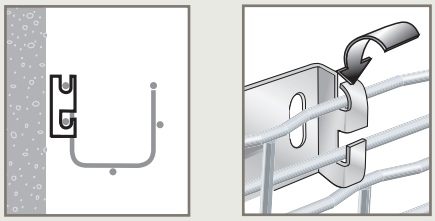



For Swiftrack channel support **p. 29**

Key :

- GS Pre-galvanised
- GC Hot dip galvanised after manufacture
- 304L Stainless steel 304L
- 316L Stainless steel 316L

For detailed information related to finishes, refer to **p. 8**