keuzetabel Cablofil draadgoot hulpstukken
sendzimir/elektrolytisch verzinkt & thermisch verzinkt

SEND ELVZ DC THVZ

technische gegevens: e-catalogus

■ Bochtverbinder Faslock auto

CF30 - CF54 - CF80 - CF105 - CF150 | 100 - 600 mm

Faslock S 100 t/m 200mm	SEND ELVZ	CM558340	N
	DC THVZ	CM558347	
Faslock XL 300 t/m 600mm	SEND ELVZ	CM558320	
	DC THVZ	CM558327	



■ Klemplaat CE 25 - CE 30

CF30 - CF54 - CF80 - CF105 - CF150 | 50 - 600 mm

KITASSTR CE25+CE30+BTRCC	SEND ELVZ	CM558081	
	DC THVZ	CM558087	
KITASSVS CE25VS+CE30ES	SEND ELVZ	CM558071	
	DC THVZ	CM558077	
CE 25	SEND ELVZ	CM558011	
	DC THVZ	CM558013	
CE 30	SEND ELVZ	CM558041	
	DC THVZ	CM558043	
BTRCC 6X20	SEND ELVZ	CM801011	
	DC THVZ	CM801017	

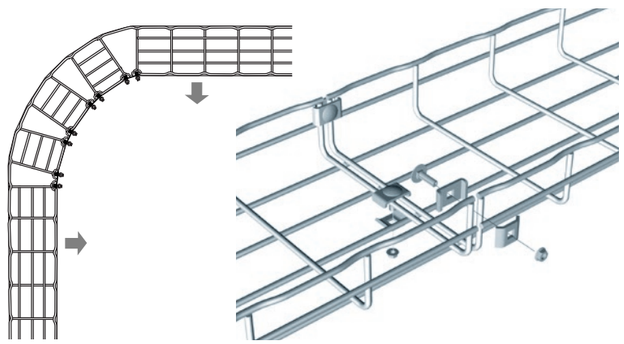

■ Universele binnenbocht PA

CF30 - CF54 - CF105 | 50 - 600 mm

PA 1 H30	SEND ELVZ	CM840101	N
	DC THVZ	CM840103	
PA 2 H54	SEND ELVZ	CM840111	
	DC THVZ	CM840113	
PA 2 H105	SEND ELVZ	CM840131	
	DC THVZ	CM840133	

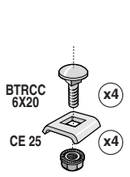

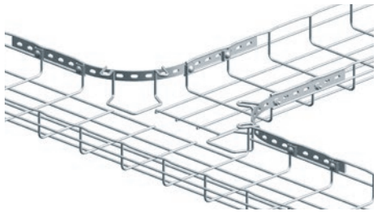

■ Universele verbindingsstrip ED 275

CF54 - CF105 - CF150 | 50 - 600 mm

ED275	SEND ELVZ	CM558221	
	DC THVZ	CM558223	
CE 25	SEND ELVZ	CM558011	
	DC THVZ	CM558013	
BTRCC 6X20	SEND ELVZ	CM801011	
	DC THVZ	CM801017	

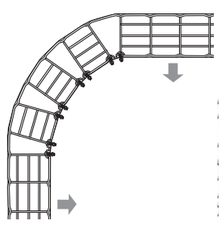

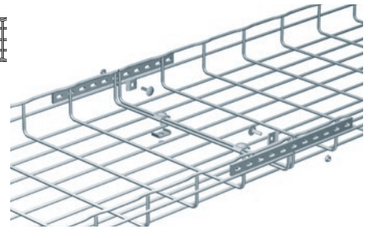

■ Montageplaat CE 40

CF30 - CF54 | 100 - 200 mm

CE 40	SEND ELVZ	CM558051	
	DC THVZ	CM558053	

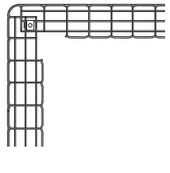

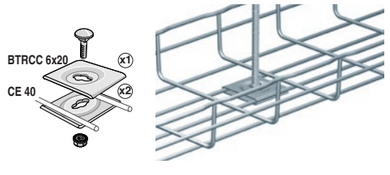

legrand

keuzetabel Cablofil draadgoot hulpstukken
sendzimir/elektrolytisch verzinkt & thermisch verzinkt

SEND ELVZ DC THVZ

■ Verbindingssstrips EZT 90 - ED250/90 - ED 1100

CF30 - CF54 - CF80 - CF105 - CF150 | 50 - 600 mm

Hoek-verbinder EZT 90	SEND ELVZ	CM840231	N
	DC THVZ	CM840233	
Aftakverbinder ED250/90	SEND ELVZ	CM558211	
	DC THVZ	CM558213	
Universele verbindingsstrip ED 1100	SEND ELVZ	CM558201	
	DC THVZ	CM558203	

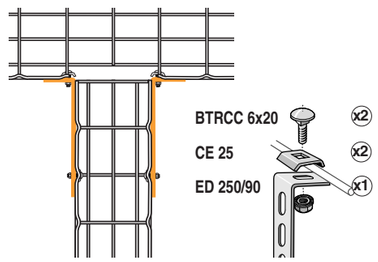

■ Aardconnector aluminium Grifequip

CF30 - CF54 - CF80 - CF105 - CF150 | 50 - 600 mm

Aardconnector GRIFEQUIP	AL	CM585327	
Aardconnector GRIFQUIP 2 N	AL	CM585427	

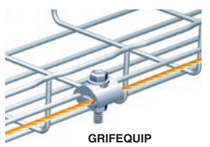



■ Aardconnector koper BLF - BLT - SBU

CF30 - CF54 - CF80 - CF105 - CF150 | 50 - 600 mm

BLF 8/16	CU	CM585387	
BLF 8/35	CU	CM585397	
BLF 8/50	CU	CM585407	
BLT 6/16	CU	CM585357	
BLT 6/35	CU	CM585367	
BLT 6/50	CU	CM585377	
Beugel voor aard-connector SBU	SEND ELVZ	CM585090	
	DC THVZ	CM585093	

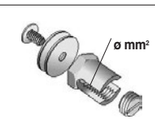



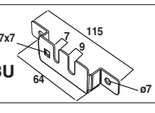

	Lengte	Ø
BLF 8/16	22	16
BLF 8/35	24	35
BLF 8/50	26	50
BLT 8/16	22	16
BLT 8/35	24	35
BLT 8/50	26	50

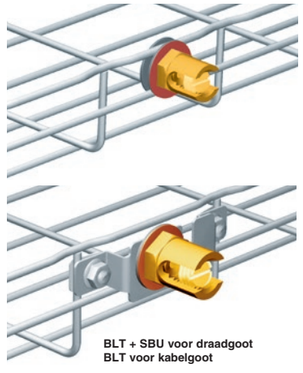

■ Plafondbeugel

CF30 - CF54 - CF80 - CF105 - CF150 | 50 - 600 mm

Plafondbeugel universeel	SEND ELVZ	8232000	
Plafondbeugel	SEND ELVZ	8232100	
	DC THVZ	8262100	

Plafondbeugel universeel: 150 daN
Plafondbeugel: 250 daN

