WERMA
SIGNALTECHNIK

Kombi*SIGN* 50, 70 and 71
Signals for combining
– at the twist of a hand



Kombi*SIGN* 71



Kombi*SIGN* 50



Kombi*SIGN* 70

Accessories for Signal Tower Kombi*SIGN* 71



ORDER SPECIFICATIONS:

Bulb BA 15 d, Total length max. 42 mm			
12 V, 5 Watt	**955 840 34**		
24 V, 5 Watt	**955 840 35**		
115 V, 5 Watt	**955 840 57**		
230 V, 5 Watt	**955 840 38**		
LED-Bulb BA 15d, Total length max. 42 mm			
Voltage	24 V ≅	115 V ~	230 V ~
Current consumption	< 45 mA	< 15 mA	< 15 mA
red	**956 100 75**	**956 100 67**	**956 100 68**
green	**956 200 75**	**956 200 67**	**956 200 68**
yellow	**956 300 75**	**956 300 67**	**956 300 68**
white	**956 400 75**	**956 400 67**	**956 400 68**
blue	**956 500 75**	**956 500 67**	**956 500 68**
Info transparencies available:			
neutral	**975 840 49**	number "5"	**975 840 55**
number "0"	**975 840 50**	number "6"	**975 840 56**
number "1"	**975 840 51**	number "7"	**975 840 57**
number "2"	**975 840 52**	number "8"	**975 840 58**
number "3"	**975 840 53**	number "9"	**975 840 59**

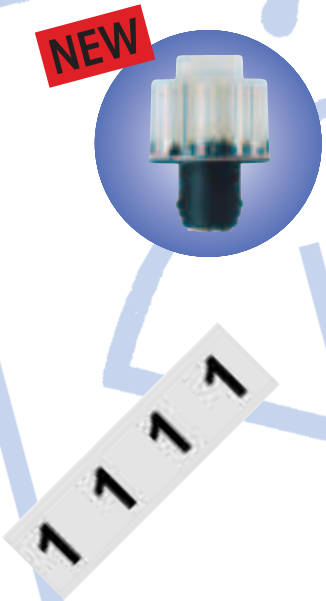

TECHNICAL DIAGRAMS

see pages 26 + 27

CAGE CLAMP®

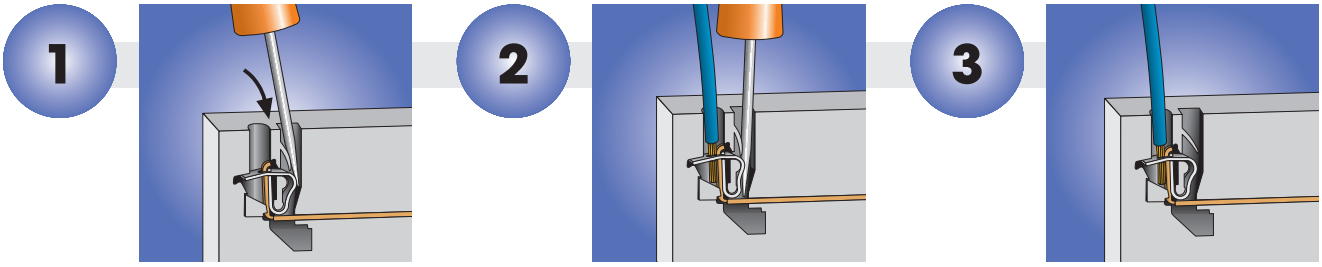

Insert screwdriver into opening as far as possible.

Open spring-loaded clamp with help of the screwdriver.

Remove screwdriver – the conductor is firmly clamped.

840 Signal Tower Kombi*SIGN* 70



Base with tube (accessory)



Bracket (accessory)



Tube mounting with Alu-tube

- **Signal tower system 70 mm ø modular construction**
- **360° visibility**
- **Wide range of optical and audible elements**
- **Elements can be assembled as required**

TECHNICAL SPECIFICATIONS:

Dimensions (Diameter x Height):	Terminal element: 70 mm x 30 mm Light element: 70 mm x 65 mm Audible element: 70 mm x 72 mm			
Housing and accessories:	Polyamide, high impact, black			
Dome:	Polycarbonate, transparent			
Fixing:	Base mounting Tube mounting, for tube ø 25 mm Bracket mounting			
Socket:	Bayonet, B 15 d, for bulb max. 7 W			
Connection:	Screw M3 in terminal element Contact protection according to VDE			
Element seal:	Standard pre-mounted with each module			
Protection rating:	Light elements: IP 54 Audible elements: IP 54 (Order no. 844 123 55 = IP 40)			
Number of modules possible:	max. 5 / max. 10 elements with 2-sided bracket			
Permanent light element Bulbs not included in assembly	12 - 240 V			
Blinking light element	24 V ≅	115 V ≅	230 V ≅	
Flashing light element Current consumption: reduced for AS-Interface:	12 V = 195 mA	24 V = 125 mA 80 mA	115 V ~ 20 mA	230 V ~ 15 mA
LED-Permanent light element Current consumption: Starting current:	24 V ≅ 45 mA < 0,5 A	115 V ~ 25 mA	230 V ~ 25 mA	
LED-Blinking light element Current consumption: Starting current:	24 V ≅ 40 mA < 0,5 A			
LED-Rotating light element Current consumption: Starting current:	24 V ≅ 70 mA < 0,5 A			

TECHNICAL DIAGRAMS

see page 25

ACCESSORIES

see pages 26 + 27

840	842	843
2	5	2

IP54 · +50°C / -20°C · 105 dB · 2 Ws

Phone +49 74 24 / 95 57 0 . Fax +49 74 24 / 95 57 44



Permanent / Blinking / Flashing light element

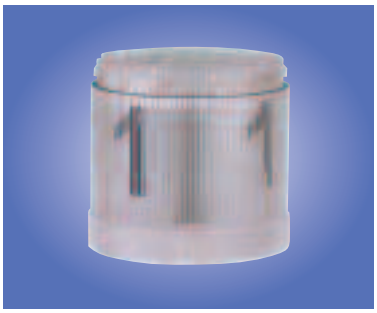

Permanent light, clear with info

Life duration up to 100.000 h



LED element

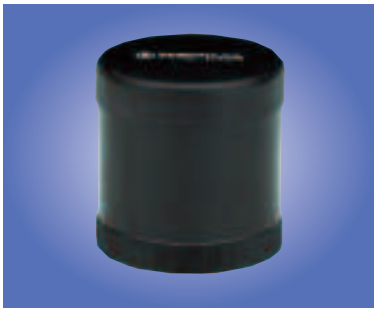

Audible element



Terminal element with cap

ORDER SPECIFICATIONS OPTICAL ELEMENTS:

Permanent light element	12-240 V		**Flashing light el.**	24 V =
red	**840 100 00**		(ASI)	**842 110 55**
green	**840 200 00**			**842 210 55**
yellow	**840 300 00**			**842 310 55**
clear	**840 400 00**			**842 410 55**
blue	**840 500 00**			**842 510 55**
Blinking light element	24 V ≅		115 V ≅	230 V ≅
red	**841 100 55**		**841 100 67**	**841 100 68**
green	**841 200 55**		**841 200 67**	**841 200 68**
yellow	**841 300 55**		**841 300 67**	**841 300 68**
clear	**841 400 55**		**841 400 67**	**841 400 68**
blue	**841 500 55**		**841 500 67**	**841 500 68**
Flashing light element	12 V =	24 V =	115 V ~	230 V ~
red	**842 100 54**	**842 100 55**	**842 100 67**	**842 100 68**
green	**842 200 54**	**842 200 55**	**842 200 67**	**842 200 68**
yellow	**842 300 54**	**842 300 55**	**842 300 67**	**842 300 68**
clear	**842 400 54**	**842 400 55**	**842 400 67**	**842 400 68**
blue	**842 500 54**	**842 500 55**	**842 500 67**	**842 500 68**
LED-Permanent light element		24 V ≅	115 V ~	230 V ~
red		**843 100 55**	**843 100 67**	**843 100 68**
green		**843 200 55**	**843 200 67**	**843 200 68**
yellow		**843 300 55**	**843 300 67**	**843 300 68**
clear		**843 400 55**	**843 400 67**	**843 400 68**
blue		**843 500 55**	**843 500 67**	**843 500 68**
LED-Blinking light element		24 V ≅		
red		**843 110 55**		
green		**843 210 55**		
yellow		**843 310 55**		
clear		**843 410 55**		
blue		**843 510 55**		
LED-Rotating light element		24 V ≅		
red		**843 130 55**		
green		**843 230 55**		
yellow		**843 330 55**		
clear		**843 430 55**		
blue		**843 530 55**		

ORDER SPECIFICATIONS AUDIBLE ELEMENTS:

Buzzer element	24 V ≅	115 V ≅	230 V ~
85 dB, 25 mA, IP 54, continuous or pulsating tone	**844 118 55**	**844 118 67**	**844 118 68**
Siren element	24 V =		
105 dB, 100 mA, IP 40 continuous tone alternating	**844 123 55**		
Multi-functional Siren	24 V ≅ / 80 mA	115 V ~ / 40 mA	230 V ~ / 40 mA
100 dB, IP 54, 8 different tones, volume adjustable	**844 126 55**	**844 126 67**	**844 126 68**
Multi-functional Siren, with remote control	24 V = **844 126 95**		
100 dB, 80 mA, IP 54, 7 different tones can be triggered remotely, volume adjustable			
Vocal element	24 V ≅		
	844 900 55		

ORDER SPECIFICATIONS TERMINAL ELEMENTS:

Terminal element for tube mounting including cap	**840 080 00**
Terminal element for bracket or base mounting, including cap and seal	**840 085 00**

Accessories for Kombi*SIGN* 70

ORDER SPECIFICATIONS:	
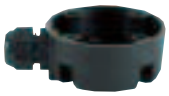 Contact box for cable exit at side, with mounting material	**975 840 01**
 Contact box with magnetic base and cable exit at side	**975 840 04**
 Bracket for base mounting, with cable gland	**960 000 01**
 Bracket for surface mounting, with cable gland	**960 000 02**
 Bracket for 1-sided mounting incl. rubber seal	**975 840 85**
 Bracket for 2-sided mounting incl. rubber seal	**975 840 86**
Tube ø 25 mm, all anodized aluminium	
 100 mm long	**975 845 10**
250 mm long	**975 840 25**
400 mm long	**975 840 40**
800 mm long	**975 840 80**
 Base for tube mounting ø 25 mm, plastic incl. rubber seal	**975 840 90**
 Base for tube mounting ø 25 mm, metal incl. rubber seal	**975 840 91**
 Base with integrated tube, ø 25 mm, 110 mm long, plastic incl. rubber seal	**975 840 10**
 Adapter for tube mounting ø 25 mm / 1/2″ screw	**975 840 02**
 Cable gland for surface mounting M 16 x 1,5	**960 000 04**

Phone +49 74 24 / 95 57 0 . Fax +49 74 24 / 95 57 44



ORDER SPECIFICATIONS:

Bulb BA 15 d, Total length max. 42 mm	
12 V, 5 Watt	**955 840 34**
24 V, 5 Watt	**955 840 35**
115 V, 5 Watt	**955 840 57**
230 V, 5 Watt	**955 840 38**



LED-Bulb BA 15d, Total length max. 42 mm			
Voltage	24 V ≅	115 V ~	230 V ~
Current consumption	< 45 mA	< 15 mA	< 15 mA
red	**956 100 75**	**956 100 67**	**956 100 68**
green	**956 200 75**	**956 200 67**	**956 200 68**
yellow	**956 300 75**	**956 300 67**	**956 300 68**
white	**956 400 75**	**956 400 67**	**956 400 68**
blue	**956 500 75**	**956 500 67**	**956 500 68**



Info transparencies available:	
neutral	**975 840 49**
number "0"	**975 840 50**
number "1"	**975 840 51**
number "2"	**975 840 52**
number "3"	**975 840 53**
number "4"	**975 840 54**
number "5"	**975 840 55**
number "6"	**975 840 56**
number "7"	**975 840 57**
number "8"	**975 840 58**
number "9"	**975 840 59**



ORDER SPECIFICATIONS VOCAL ELEMENT:

	24 V ≅
Vocal element	**844 900 55**
Recording station for vocal element, with microphone, 115 V ~	**844 901 67**
Recording station, 230 V ~ (available on loan, please enquire)	**844 901 68**



TECHNICAL DIAGRAMS

see pages 26 + 27

845 Signal Tower Kombi*SIGN* 50



Base with tube (accessory)



Bracket (accessory)



Base mounting

- **Signal tower system 50 mm ø modular construction**
- **360° visibility**
- **Choice of optical and audible elements**
- **Order of optical elements interchangeable as required**
- **Tool-free changing of elements and bulbs**

TECHNICAL SPECIFICATIONS:

Dimensions (Diameter x Height):	Terminal element: 52 mm x 16 mm		
	Light element: 52 mm x 65 mm		
	Audible element: 52 mm x 72 mm		
Housing and accessories:	Polyamide, high impact, black		
Dome:	Polycarbonate, transparent		
Fixing:	Base mounting		
	Tube mounting, for tube ø 25 mm		
	Single hole mounting		
	Bracket mounting		
Socket:	Bayonet, B 15 d, for bulb max. 5 W		
Connection:	Screwable connection M3,		
	max. 2,5 mm^2		
	Contact protection according to VDE		
Protection rating:	Light elements: IP 54		
	Audible elements: IP 54		
Number of modules possible:	max. 4		
Permanent light element	12 - 240 V ≅		
Bulbs not included in assembly			
Blinking light element	24 V ≅	115 V ≅	230 V ≅
LED-Permanent light element	24 V ≅	115 V ~	230 V ~
Current consumption:	45 mA	25 mA	25 mA
Starting current:	< 0,5 A at 24 V		

TECHNICAL DIAGRAMS

see page 25

846 848

IP54 +50°C -20°C 80 dB 3 2

Phone +49 74 24 / 95 57 0 . Fax +49 74 24 / 95 57 44



Permanent light element

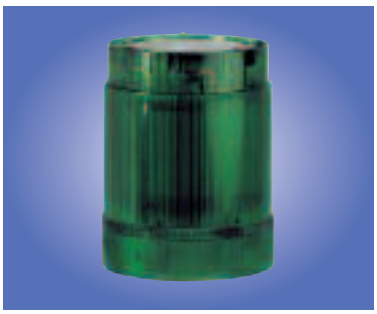

Blinking light element

Life duration up to 100.000 h



LED element

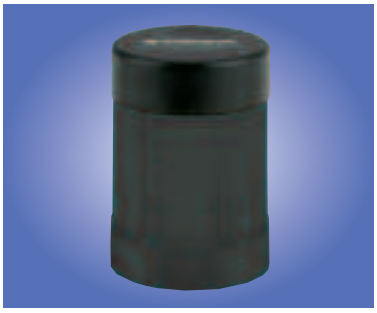

Audible element

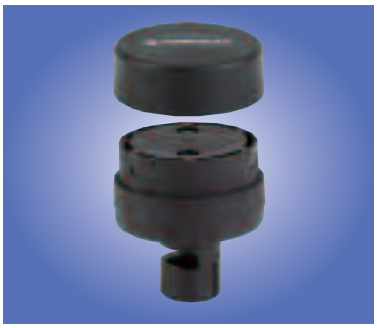

Terminal element with cap

ORDER SPECIFICATIONS OPTICAL ELEMENTS:

Permanent light element	12-240 V ≅		
red	**846 100 00**		
green	**846 200 00**		
yellow	**846 300 00**		
clear	**846 400 00**		
blue	**846 500 00**		
Blinking light element	24 V ≅	115 V ≅	230 V ≅
red	**847 100 55**	**847 100 67**	**847 100 68**
green	**847 200 55**	**847 200 67**	**847 200 68**
yellow	**847 300 55**	**847 300 67**	**847 300 68**
clear	**847 400 55**	**847 400 67**	**847 400 68**
blue	**847 500 55**	**847 500 67**	**847 500 68**
LED-Permanent light element	24 V ≅	115 V ~	230 V ~
red	**848 100 55**	**848 100 67**	**848 100 68**
green	**848 200 55**	**848 200 67**	**848 200 68**
yellow	**848 300 55**	**848 300 67**	**848 300 68**
clear	**848 400 55**	**848 400 67**	**848 400 68**
blue	**848 500 55**	**848 500 67**	**848 500 68**

ORDER SPECIFICATIONS AUDIBLE ELEMENTS:

Buzzer element	24 V ≅	115 V ~	230 V ~
80 dB, 24 V ≅, max. 25 mA, IP 54, continuous or pulsating tone, adjustable	**849 000 75**	**849 000 77**	**849 000 68**

ORDER SPECIFICATIONS TERMINAL ELEMENT:

Terminal element	**845 000 00**
for base mounting, tube mounting, single hole and bracket mounting, including cap	

ACCESSORIES

see page 26 + 27















ORDER SPECIFICATIONS:

Contact box for cable exit at side, with mounting material	**975 840 01**
Contact box with magnetic base and cable exit at side	**975 840 04**
Bracket for surface mounting, with cable gland	**960 000 01**
Bracket for tube mounting	**975 845 02**
Tube ø 25 mm, all anodized aluminium	
100 mm long	**975 845 10**
250 mm long	**975 840 25**
400 mm long	**975 840 40**
800 mm long	**975 840 80**
Base for tube mounting ø 25 mm, plastic incl. rubber seal	**975 840 90**
Base for tube mounting ø 25 mm, metal incl. rubber seal	**975 840 91**
Base for surface mounting	**975 845 01**
Adapter for single hole mounting incl. rubber seal	**975 845 03**

Bulb BA 15 d,
Total length max. 42 mm

12 V, 5 Watt	**955 840 34**
24 V, 5 Watt	**955 840 35**
115 V, 5 Watt	**955 840 57**
230 V, 5 Watt	**955 840 38**

LED-Bulb BA 15d,
Total length max. 42 mm

Voltage	24 V ≅	115 V ~	230 V ~
Current consumption	< 45 mA	< 15 mA	< 15 mA
red	**956 100 75**	**956 100 67**	**956 100 68**
green	**956 200 75**	**956 200 67**	**956 200 68**
yellow	**956 300 75**	**956 300 67**	**956 300 68**
white	**956 400 75**	**956 400 67**	**956 400 68**
blue	**956 500 75**	**956 500 67**	**956 500 68**

TECHNICAL DIAGRAMS

see pages 26 + 27

Signal Tower with AS-Interface Element





Signal towers Kombi*SIGN* 50, 70 and 71 with AS-interface element are capable of total communication: By simple integration of an AS-interface element the actuators are connected to the networking system actuator-sensor-interface - this considerably reduces complex wiring. This element is to be mounted as the lowermost element in the signal tower just like a light element.

TECHNICAL SPECIFICATIONS:

	AS-Interface Element [1]	AS-Interface Element with additional external voltage [1] [2]	
Number of signal elements	max. 4	max. 4	
Type of signal elements	Flashing light elements LED elements Buzzer elements Siren elements (the total consumption of the single elements must not exceed 200 mA)	Permanent light elements Flashing light elements [1] LED elements Buzzer elements Siren elements [1]	
IO-Code	8	8	
ID-Code	F	F	
Power supply	through bus conduction	through bus conduction	
Operaring voltage	18,5 V ... 31,6 V	18,5 V ... 31,6 V	
Current consumption	210 mA	75 mA [1] / 50 mA [2]	
Reverse battery protection	integrated	integrated	
Watchdog	integrated	integrated	
Terminals	4, electronic	4, relays	
On-load voltage	through bus conduction	additional external voltage:	10 V...120 V= [1] 10 V...30 V = [2] 10 V...230 V ~
Current carrying cap. ∑ Imax	200 mA	1,5 A	
Short current-/overload pro.	integrated	fuse M 1,6 A	

[1] valid for Kombi*SIGN* 70 and 71 / [2] valid for Kombi*SIGN* 50

ORDER SPECIFICATIONS AS-INTERFACE ELEMENTS KOMBI*SIGN* 70 + 71:

	Kombi*SIGN* 70	Kombi*SIGN* 71
AS-Interface Element	**840 800 55**	**646 800 55**
AS-Interface Element with add. external voltage	**840 800 68**	**646 800 68**

ORDER SPECIFICATIONS AS-INTERFACE ELEMENT KOMBI*SIGN* 50:

AS-Interface Element with add. external voltage	**845 800 68**

TECHNICAL DIAGRAMS

see pages 24 + 25 + 26

840/845 646

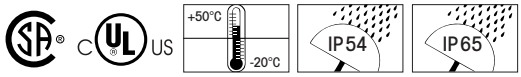

Summary of Kombi*SIGN* Accessories

Kombi*SIGN* 50

Order no.

975 845 01 Base for surface mounting and tube mounting



Order no.

975 845 02 Bracket for tube mounting

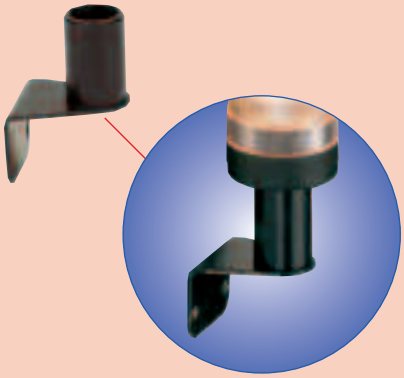

Order no.

975 845 03 Adapter for single hole mounting

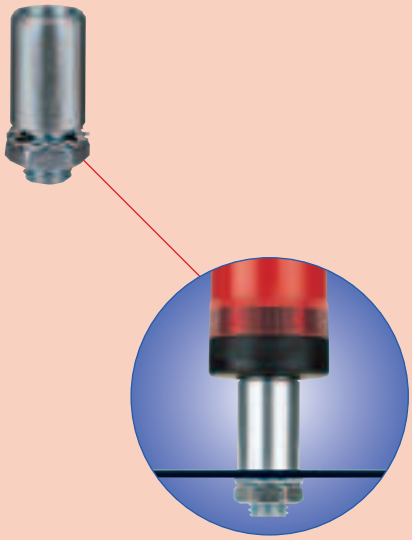

Kombi*SIGN* 50, 70 and 71

Order no.

975 840 01 Contact box for cable exit at side, with mounting material

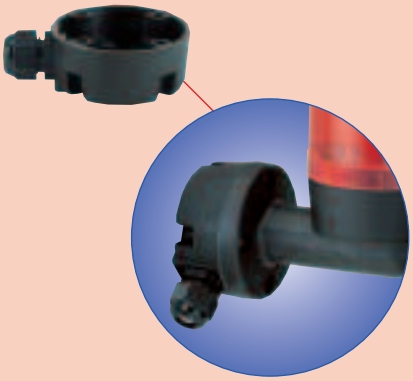

Order no.

975 840 04 Contact box with magnetic base and cable exit at side

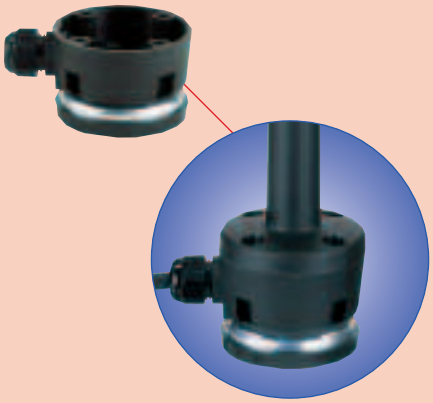

Order no..

960 000 01 Bracket for base mounting, including cable gland M 16 x 1,5

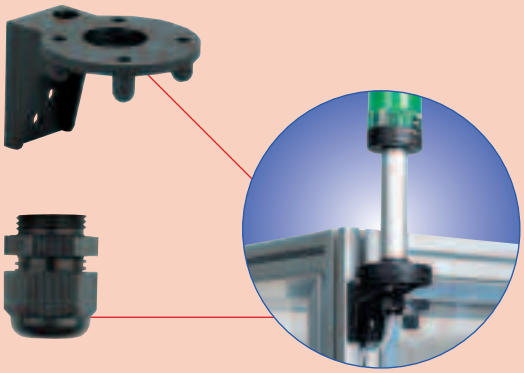

LED-Bulb BA 15d
Total length max. 42 mm

Voltage	24 V ≅	115 V ~	230 V ~
Current consumption	< 45 mA	< 15 mA	< 15 mA
red	956 100 75	956 100 67	956 100 68
green	956 200 75	956 200 67	956 200 68
yellow	956 300 75	956 300 67	956 300 68
white	956 400 75	956 400 67	956 400 68
blue	956 500 75	956 500 67	956 500 68



Bulb BA 15 d,
Total length max. 42 mm

955 840 34	12 V, 5 Watt
955 840 35	24 V, 5 Watt
955 840 57	115 V, 5 Watt
955 840 38	230 V, 5 Watt



TECHNICAL DIAGRAMS
see pages 26 + 27

Phone +49 74 24 / 95 57 0 . Fax +49 74 24 / 95 57 44

Summary of Kombi*SIGN* Accessories

Kombi*SIGN* 70 and 71

Order no.

975 840 90 Base for tube mounting ø 25 mm, plastic

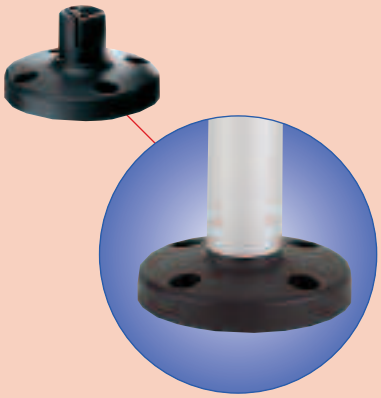

Order no.

975 840 91 Base for tube ø 25 mm, metal



Order no.

	Tube ø 25 mm, all anodized aluminium
975 845 10	100 mm long
975 840 25	250 mm long
975 840 40	400 mm long
975 840 80	800 mm long

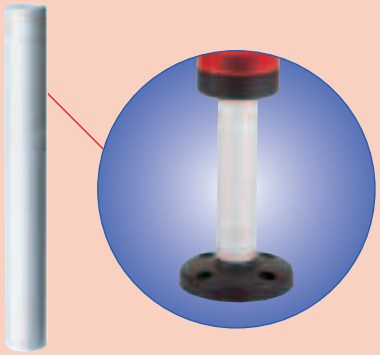

Order no.

975 840 85 Bracket for 1-sided mounting

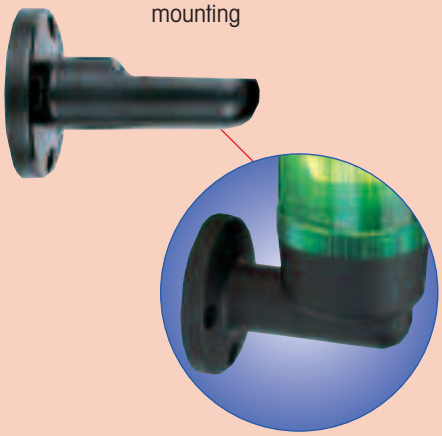

Order no.

975 840 86 Bracket for 2-sided mounting

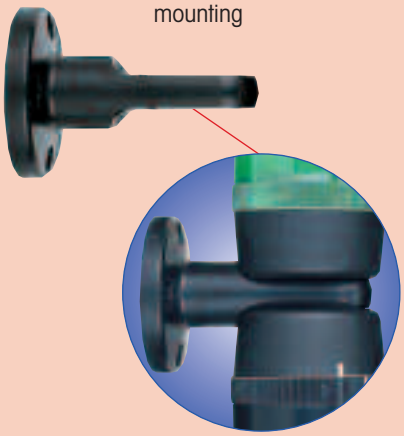

Order no.

975 840 10 Base with integrated tube, ø 25 mm, 110 mm long, plastic



Order no.

975 840 02 Adapter for tube mounting ø 25 mm / 1/2" screw

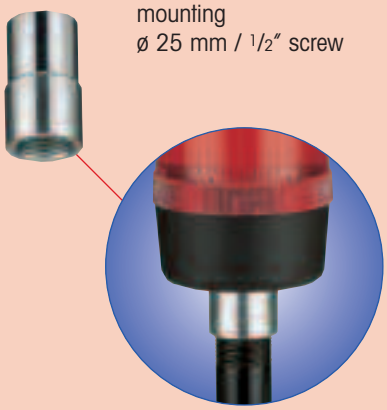

Order no.

960 000 02 Bracket for surface mounting including cable gland M 16 x 1,5

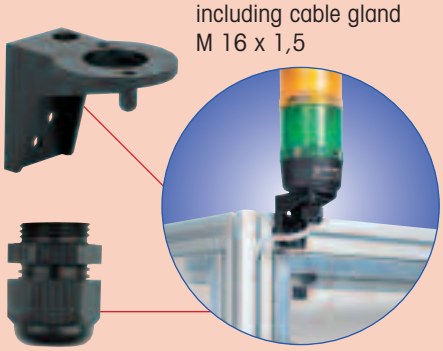

Order no.

960 000 04 Cable gland for surface mounting, M 16 x 1,5

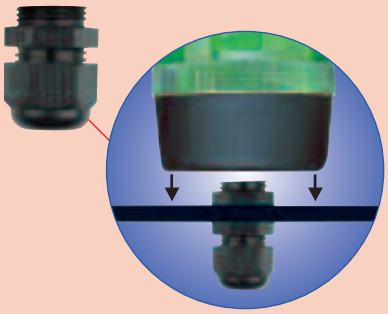

Order no.

Info transparencies:

975 840 49	neutral
975 840 50	number "0"
975 840 51	number "1"
975 840 52	number "2"
975 840 53	number "3"

Order no.

975 840 54	number "4"
975 840 55	number "5"
975 840 56	number "6"
975 840 57	number "7"
975 840 58	number "8"
975 840 59	number "9"

TECHNICAL DIAGRAMS
see pages 26 + 27

Interface Box for Kombi*SIGN* 50, 70 and 71



- Direct triggering via PC
- Triggering of four independent signal tower modules
- Software included in delivery

TECHNICAL SPECIFICATIONS:

Dimensions of interface box (L x W x H):	120 x 65 x 40 mm
Drive:	up to 4 signal elements 24 V via PC
Interface:	Serial RS 232
Connection:	COM with Sub-D 9-pin
Assembly:	Interface Box Network appliance 24 V Software: Driver for Labview
Working temperature:	- 20°C bis + 50°C

ORDER SPECIFICATIONS:

Interface Box	**960 000 06**

TECHNICAL DIAGRAMS

see page 116



Indication Board for Kombi*SIGN* 50, 70 and 71



- Indication board for one to five modules
- Simple mounting onto signal tower tube
- Ample space for written information
- Simply break off unwanted segments

TECHNICAL SPECIFICATIONS:

Dimensions of indication board (W x H):	153 x 345 mm
Surface area per section (W x H):	ca. 140 x 50 mm
Material:	PMMA
Assembly:	Indication board (5 sections) including mounting material
Mounting:	Fixing only possible on 25 mm diameter tube

ORDER SPECIFICATIONS:

Indication Board	**960 000 05**

TECHNICAL DIAGRAMS

see page 26

840 Vocal element for Kombi*SIGN* 70







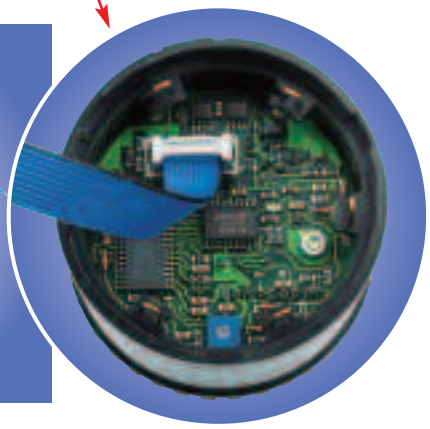

A vocal element is also available as a further audible signal element. Up to 15 different messages can be recorded and recalled. Volume can be adjusted using a potentiometer within a range at 0 - 88 dB. A distribution voltage of 24 V = is necessary. Total recording time available is 60 seconds. The drive of the individual messages uses 24 V =, 4 Bit parallel.

Up to 3 optical signal elements can be integrated in addition to the vocal element in any one signal tower. The number of messages is then limited to one. The recording of messages is carried out using a separate recording station.

TECHNICAL SPECIFICATIONS:

Dimensions (Diameter x Height):	70 x 69 mm
Housing:	Polyamide, high impact, black
Protection rating:	IP 53
Operating voltage:	24 V = (15 - 30 V =)
Current consumption:	≤ 350 mA
Volume:	0 - 88 dB (1m) adjustable
Number of texts:	max. 15
Total recording time:	60 seconds
Drive:	4 Bit parallel
Driving voltage:	+ 24 V

ORDER SPECIFICATIONS VOCAL ELEMENT:

	24 V ≅
Vocal element	**844 900 55**
Recording station for vocal element, with microphone, 115 V ~	**844 901 67**
Recording station, 230 V ~ (available on loan, please enquire)	**844 901 68**

TECHNICAL DIAGRAMS

see page 25

Technical Diagrams

640 **Kombi*SIGN* 71**

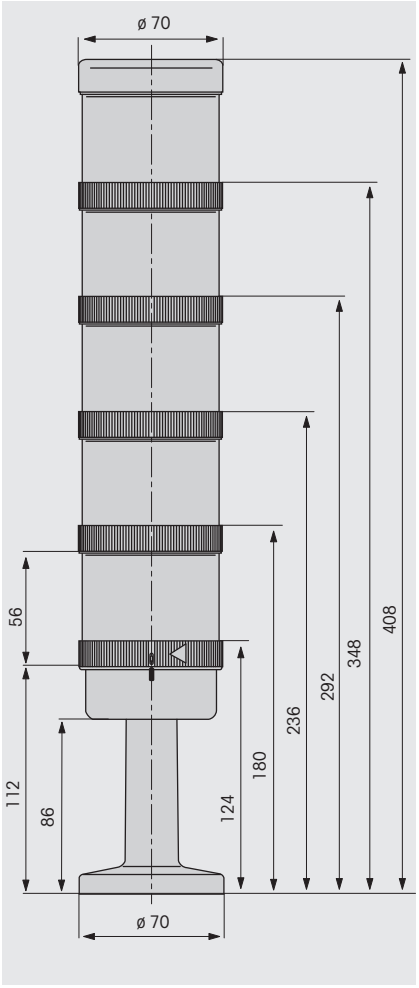

640

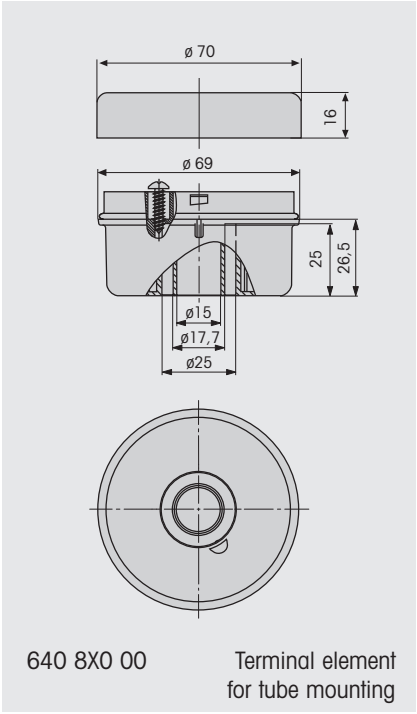

640 8X0 00 Terminal element for tube mounting

640

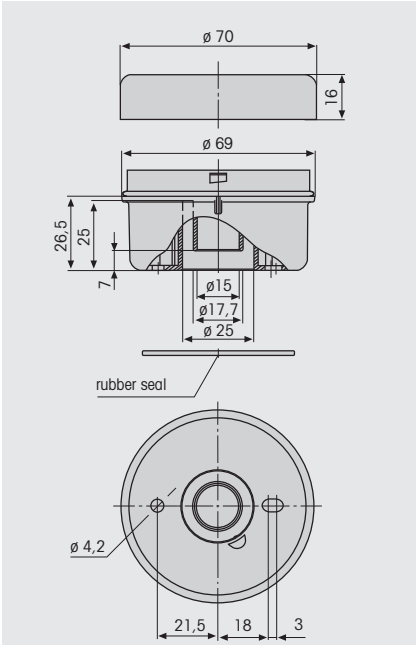

640 8X0 00 Terminal element for base/bracket mounting

Phone +49 74 24 / 95 57 0 . Fax +49 74 24 / 95 57 44

Technical Diagrams

840 **Kombi*SIGN* 70**

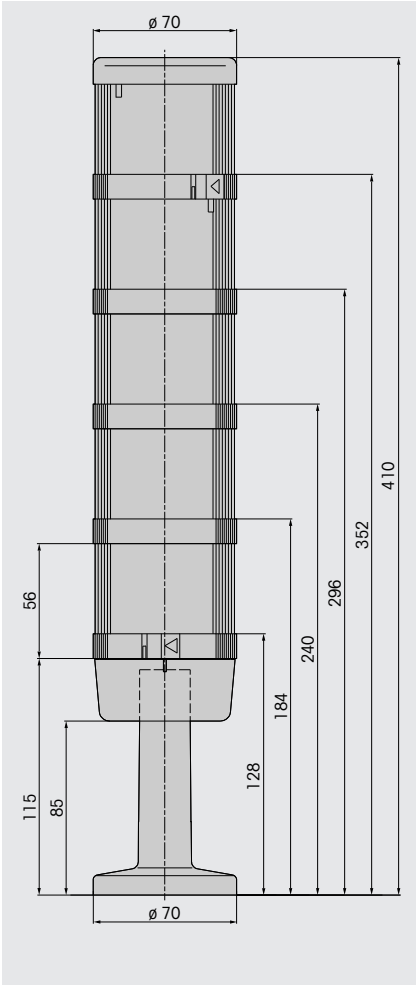

840

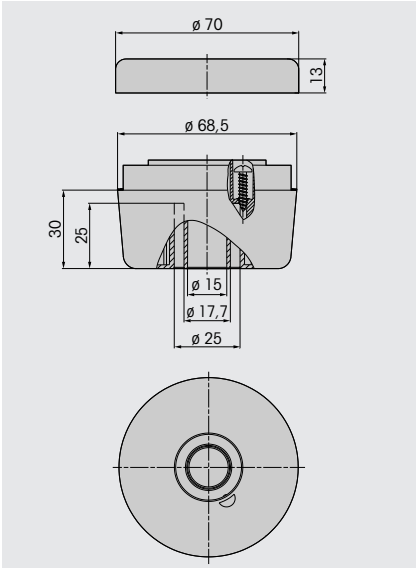

840 080 00 Terminal element for tube mounting

840

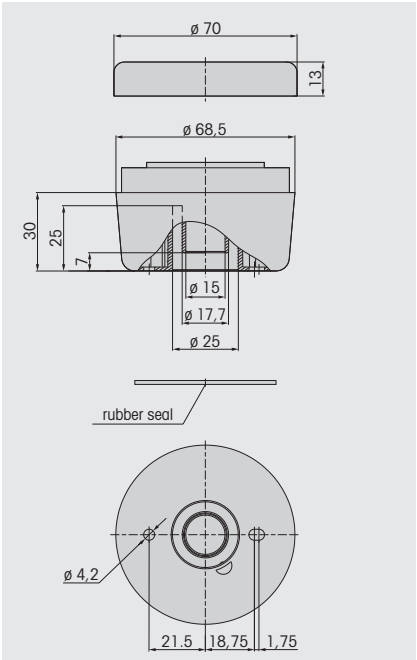

840 085 00 Terminal element for base/bracket mounting

840

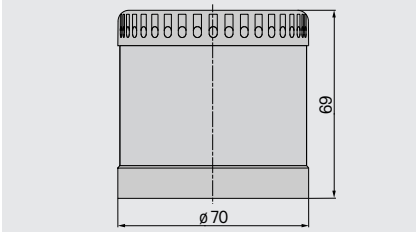

844 900 55 Vocal element

845 **Kombi*SIGN* 50**

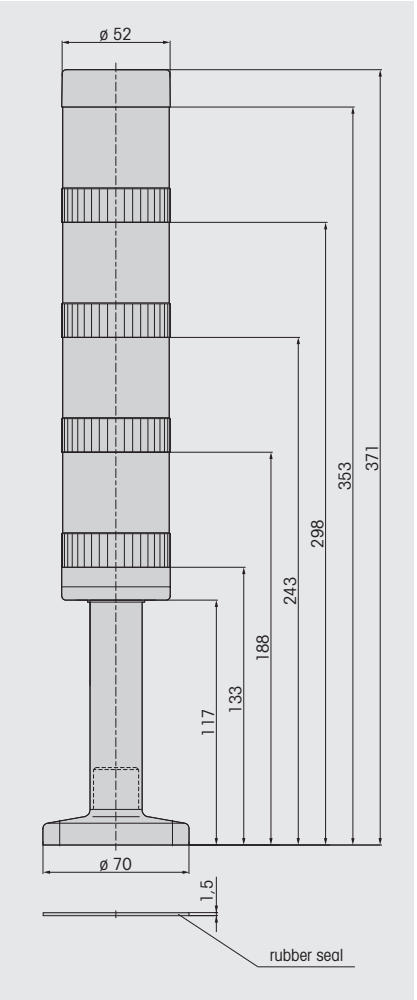

845

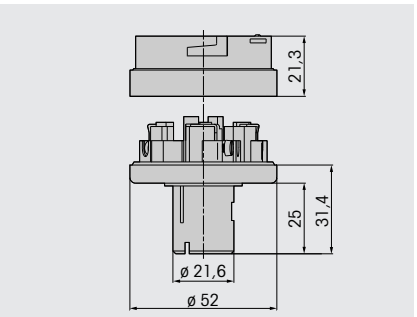

845 000 00 Terminal element

Technical Diagrams Accessories

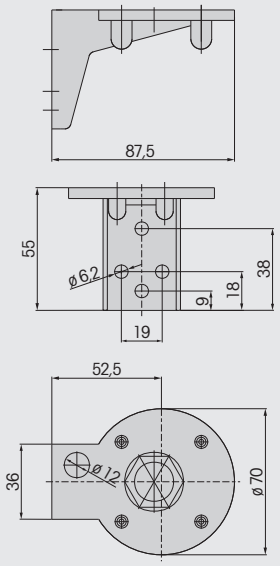

960 000 01 Bracket

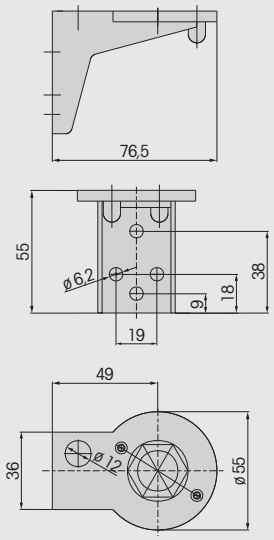

960 000 02 Bracket

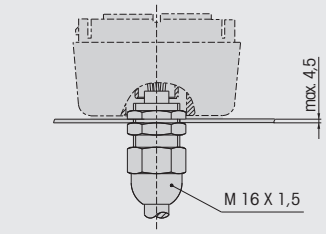

960 000 04 PG screw for base mounting

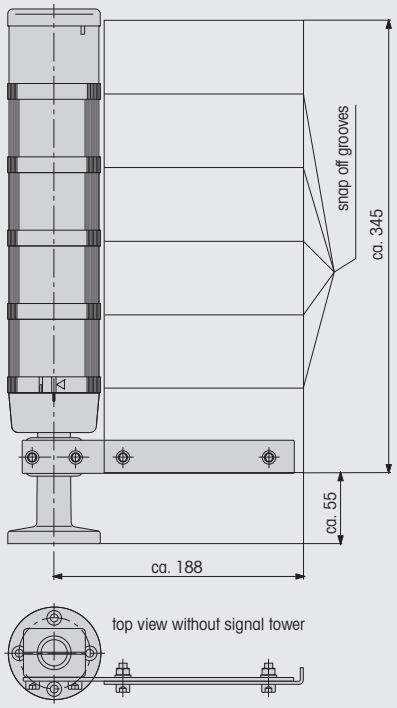

960 000 05 Indication board

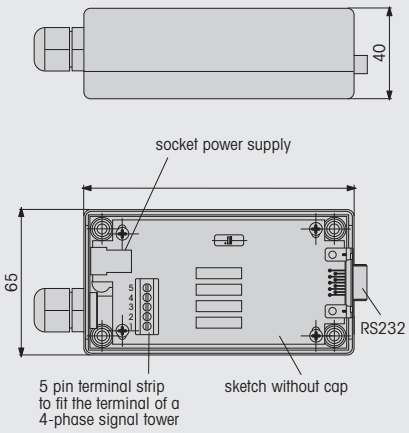

960 000 06 Interface Box

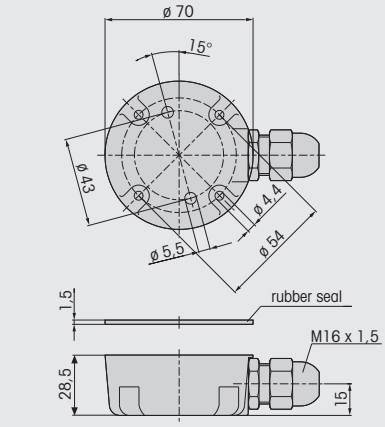

975 840 01 Adapter box

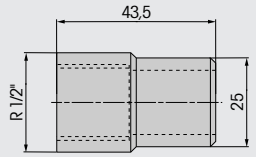

975 840 02 Adapter

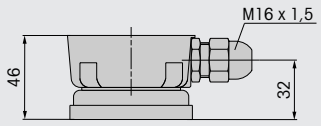

975 840 04 Adapter with magnetic base

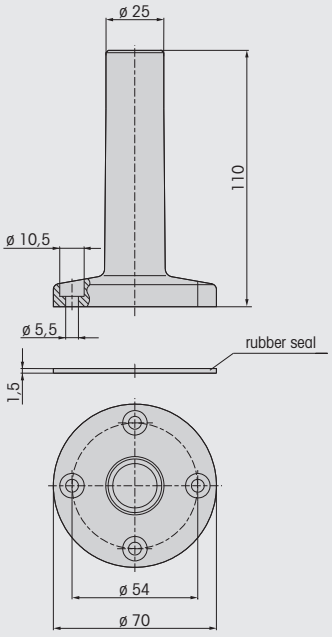

975 840 10 Base with tube

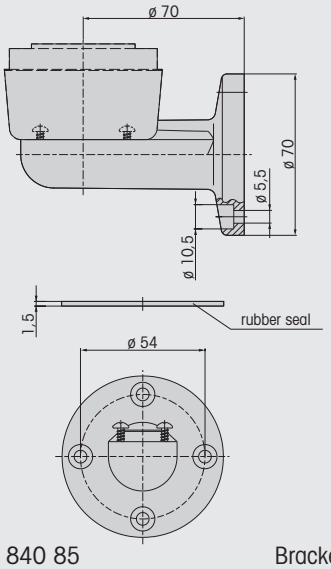

975 840 85 Bracket

Phone +49 74 24 / 95 57 0 . Fax +49 74 24 / 95 57 44

WERMA SIGNALTECHNIK

Technical Diagrams Accessories

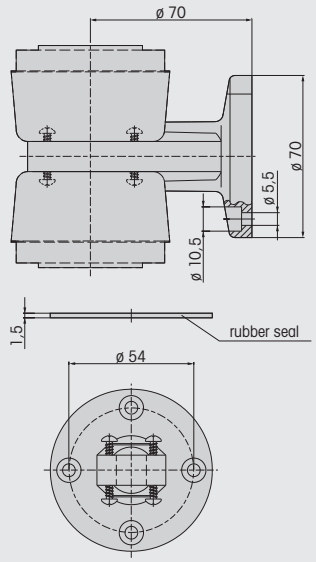

975 840 86 2-sided bracket

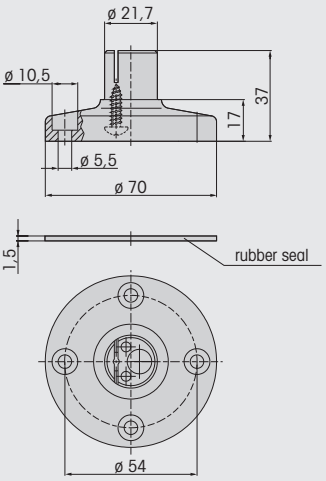

975 840 90 Base for tube, plastic

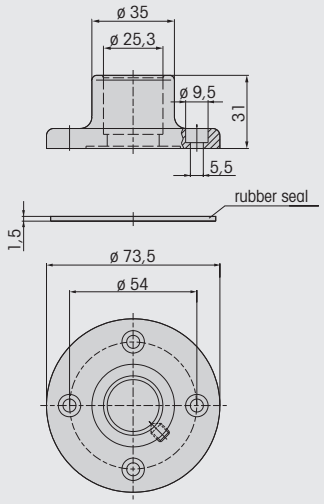

975 840 91 Base for tube, metal

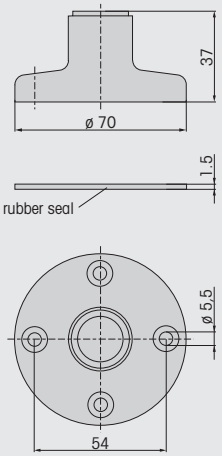

975 845 01 Base for surface mounting

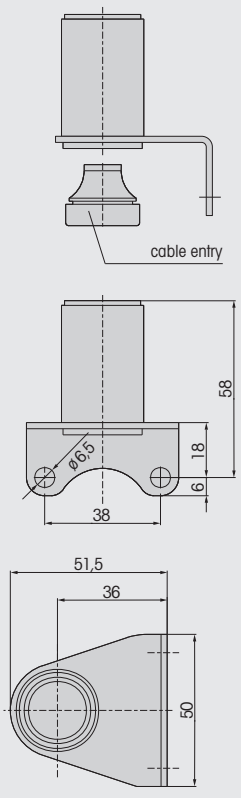

975 845 02 Bracket

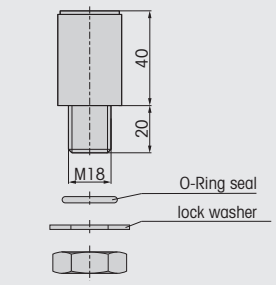

975 845 03 Adapter for single hole mounting

WERMA Product Groups

Signal Towers





Optical Signal Devices



Optical-Audible
Signal Devices



Audible
Signal Devices



Ex-Signal Devices

The WERMA Product Range

Please ask for our detailed catalogue.



- **Signal Towers**
- **Optical Signal Devices**
- **Optical-Audible Signal Devices**
- **Audible Signal Devices**
- **Ex-Signal Devices**

WERMA
SIGNALTECHNIK

WERMA Signaltechnik GmbH + Co.
78604 Rietheim-Weilheim
Phone +49 74 24 95 57 0
Fax +49 74 24 95 57 44
www.werma.de
info@werma.de

09/01 • 990 840 02 • E

Kombi*SIGN* 50

Protection rating IP 54

Slim design
modular Signal Tower system
with 50 mm diameter.

For use on
smaller machines.

Terminal element



Screwable
connection



Practical bayonet
fixing system.
Tool free
bulb change.



Kombi*SIGN* 70

Protection rating IP 54

For use in normal
conditions

Series 840

Not compatible with
Kombi*SIGN* 71

Terminal element



Screwable
connection

Optically different
to Kombi*SIGN* 71 due to:

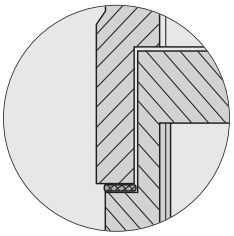

- Flat packing
- No phase on
  dome edge



- Conical
  terminal element

Phone +49 74 24 / 95 57 0 . Fax +49 74 24 / 95 57 44

WERMA SIGNALTECHNIK

Kombi*SIGN* 71

NEW



Protection rating IP 65

For use in extreme conditions

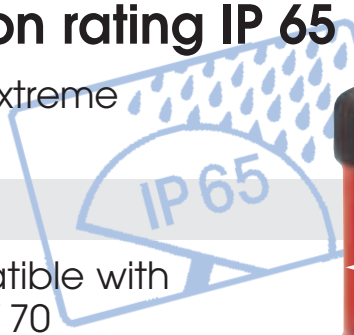

Series 640

Not compatible with Kombi*SIGN* 70

Terminal elements



Either: improved screwable connection



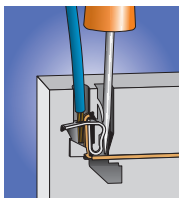

see page 11

Or: terminal element with CAGE CLAMP® technology

Optically different to Kombi*SIGN* 70 due to:

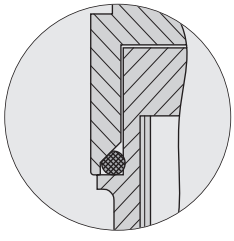

- O-Ring seal
- Phase in inside of dome



- Cylindrical terminal element



CAGE CLAMP® is a registered trademark of WAGO Kontakttechnik GmbH.

Complete Programme

The Kombi*SIGN* programme offers the customer the most diverse beacon elements in all voltages; these can be combined as required. All in all, Kombi*SIGN* offers a solution for every signalling field.

PERMANENT LIGHT ELEMENTS:

With socket B 15d for filament bulbs and LEDs.



LED PERMANENT LIGHT:

LED permanent light elements with integral Chip-On-Board technology have a high light intensity and durability.



FLASH ELEMENTS:

Flash elements can be combined as required with other signal elements within a signal tower.



LED ELEMENTS:

For Blinking and Rotating light – high light intensity and durability.



Flexible combination of optical and audible signal elements.

Comprehensive range of audible elements

Kombi*SIGN* audible elements do not require an open sound outlet. This ensures the high protection rating of IP 54 or IP 65 – even at a volume of up to 100 dB.

VOCAL ELEMENT:

Up to 15 different texts or melodies can be recorded or played with the vocal element.



AUDIBLE ELEMENTS:

The Kombi*SIGN* programme offers a huge selection of audible signal elements for each application.



Phone +49 74 24 / 95 57 0 . Fax +49 74 24 / 95 57 44

Bayonet screw

WERMA is the first signal beacon manufacturer with a quick screw system.
The bayonet screw makes it possible to connect elements both mechanically and electrically in seconds and the exchange of elements or bulb changes are made quick and easy as no tools are required.

SIMPLE OPERATION





Great diversity of accessories

A huge range of accessories enables the customer to put together signal towers which are both aesthetically pleasing and competitively priced for all fields of use.



Modular Signal Tower system in different sizes

Kombi*SIGN* is the only signal tower system with bayonet screw in different sizes.
The modular assembly makes it easy to find a fitting combination for every application.

LED with Chip-On-Board technology (COB)

WERMA Signal Towers with LED-COB

The need for high operational safety has increased the importance of light diodes in signal technology. WERMA has adopted a totally new and revolutionary approach with the introduction of Chip-On-Board technology. This involves bonding LEDs with 180° visibility directly onto a gold-plated printed circuit board.

STRIP WITH LED-COB

LED chip-on-board technology involves setting the individual LED chips directly onto the gold-plated contact surface of the printed circuit board with the aid of an automatic bonding system. Bonding follows using a gold wire to the antipole.

The colours clear, green and blue have a higher light intensity than red and yellow; here only four of the six gold surfaces are fitted with LED chips.

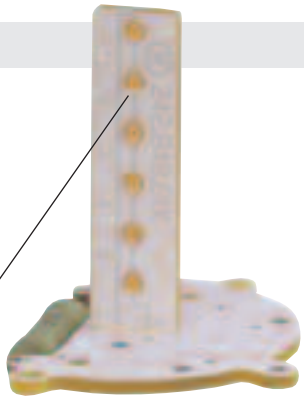

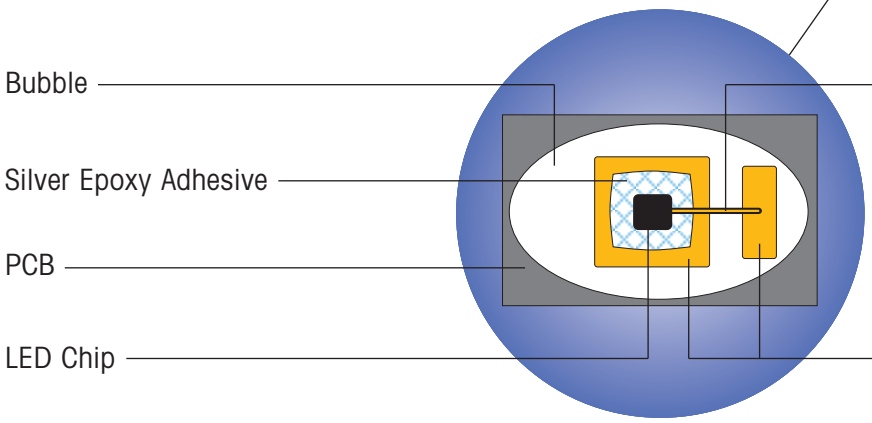



OUTSTANDING FEATURES OF LED-COB:

- **Extreme durability**
- **Low current consumption**
- **High resilience**
- **Resistance to vibration and mechanical wear and tear**

Phone +49 74 24 / 95 57 0 . Fax +49 74 24 / 95 57 44

LED with Chip-On-Board technology (COB)

Two models with COB technology are available:
As LED bulb and as an integral element.



1 LED BULB BA 15d

The compact construction form has made it possible to produce an independent LED bulb with a BA 15d dome. Bulb 956 can be inserted into permanent beacons with a B 15d socket instead of a conventional light bulb.

- **High light intensity with 360° visibility**
- **High light efficiency with optimised prism form**
- **Manual grip facility on dome**



LED BULB 956 IN PLACE OF FILAMENT BULB

LED Bulb 956 can be inserted into permanent light elements with BA 15d socket instead of a conventional bulb.

OPTIMISED FOR USE IN WERMA SIGNAL TOWERS

LED Bulb 956 is optimised for use in WERMA signal towers.



2 COB-STRIPS IN LED PERMANENT LIGHT ELEMENT

An LED-COB strip is integrated into the housing of LED permanent light.

- **Life duration of up to 100.000 hours**
- **360° visibility**
- **Protective switch for current limitation and surge voltage**



640 Signal Tower Kombi*SIGN* 71



Bracket (accessory)



Base with tube (accessory)

- **High protection rating IP 65**
- **Signal tower system 70 mm ø modular construction**
- **360° visibility**
- **Flexible combination of optical and audible devices**

TECHNICAL SPECIFICATIONS:

Dimensions (Diameter x Height):	Terminal element: 70 mm x 26,5 mm Light element: 70 mm x 65 mm Audible element: 70 mm x 72 mm			
Housing and accessories:	Polyamide, high impact, black			
Dome:	Polycarbonate, transparent			
Fixing:	Base mounting Tube mounting, for tube ø 25 mm Bracket mounting			
Socket:	Bayonet, B 15 d, for bulb max. 7 W			
Connection:	CAGE CLAMP® technology up to 2,5 mm² or screwable connection M3 Contact protection according to VDE			
Element seal:	Standard pre-mounted with each module			
Protection rating:	Light elements: IP 65 Audible elements: IP 65 (Order no. 645 830 55 = IP 40)			
Number of modules possible:	max. 5 / max. 10 elements with 2-sided bracket			
Permanent light element Bulbs not included in assembly	12 - 240 V			
Blinking light element	24 V ≅	115 V ≅	230 V ≅	
Flashing light element Current consumption: reduced for AS-Interface:	12 V = 195 mA	24 V = 125 mA 80 mA	115 V ~ 20 mA	230 V ~ 15 mA
LED-Permanent light element Current consumption: Starting current:	24 V ≅ 45 mA < 0,5 A	115 V ~ 25 mA	230 V ~ 25 mA	
LED-Blinking light element Current consumption: Starting current:	24 V ≅ 40 mA < 0,5 A			
LED-Rotating light element Current consumption: Starting current:	24 V ≅ 70 mA < 0,5 A			

TECHNICAL DIAGRAMS

see page 24

ACCESSORIES

see pages 26 + 27

641 643 644



Phone +49 74 24 / 95 57 0 . Fax +49 74 24 / 95 57 44

WERMA SIGNALTECHNIK

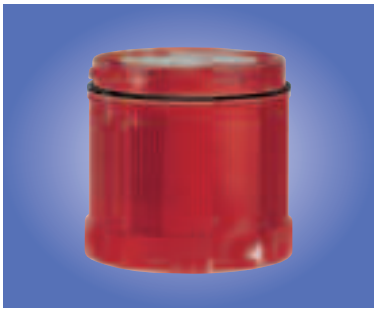

Permanent / Blinking / Flashing light element

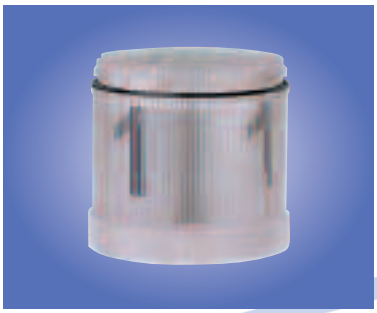

Permanent light, clear with text

Life duration up to 100.000 h



LED element

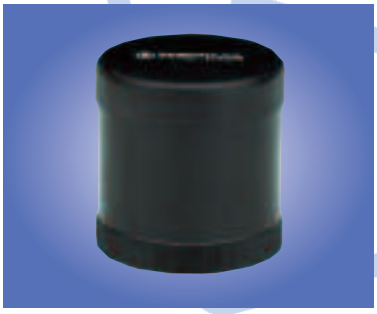

Audible element



Terminal element with cap

ORDER SPECIFICATIONS OPTICAL ELEMENTS:

Permanent light element	12-240 V		
red	**641 100 00**		
green	**641 200 00**		
yellow	**641 300 00**		
clear	**641 400 00**		
blue	**641 500 00**		
Blinking light element	24 V ≅	115 V ≅	230 V ≅
red	**642 100 75**	**642 100 77**	**642 100 78**
green	**642 200 75**	**642 200 77**	**642 200 78**
yellow	**642 300 75**	**642 300 77**	**642 300 78**
clear	**642 400 75**	**642 400 77**	**642 400 78**
blue	**642 500 75**	**642 500 77**	**642 500 78**
Flashing light element	24 V =	115 V ~	230 V ~
red	**643 100 55**	**643 100 67**	**643 100 68**
green	**643 200 55**	**643 200 67**	**643 200 68**
yellow	**643 300 55**	**643 300 67**	**643 300 68**
clear	**643 400 55**	**643 400 67**	**643 400 68**
blue	**643 500 55**	**643 500 67**	**643 500 68**
LED-Permanent light element	24 V ≅	115 V ~	230 V ~
red	**644 100 75**	**644 100 67**	**644 100 68**
green	**644 200 75**	**644 200 67**	**644 200 68**
yellow	**644 300 75**	**644 300 67**	**644 300 68**
clear	**644 400 75**	**644 400 67**	**644 400 68**
blue	**644 500 75**	**644 500 67**	**644 500 68**
LED-Blinking light element	24 V ≅		
red	**644 110 75**		
green	**644 210 75**		
yellow	**644 310 75**		
clear	**644 410 75**		
blue	**644 510 75**		
LED-Rotating light element	24 V ≅		
red	**644 130 75**		
green	**644 230 75**		
yellow	**644 330 75**		
clear	**644 430 75**		
blue	**644 530 75**		

ORDER SPECIFICATIONS AUDIBLE ELEMENTS:

Buzzer element 85 dB, 25 mA, IP 65, continuous or pulsating tone	24 V ≅ **645 800 75**	115 V ≅ **645 800 77**	230 V ~ **645 800 68**
Siren element 105 dB, 100 mA, IP 40 continuous tone alternating	24 V = **645 830 55**		
Multi-functional Siren 100 dB, 40 mA, IP 65, 8 different tones, volume adjustable	24 V ≅ / 80 mA **645 820 75**	115 V ~ / 40 mA **645 820 67**	230 V ~ / 40 mA **645 820 68**
Multi-functional Siren, with remote control 100 dB, 80 mA, IP 65, 7 different tones can be triggered remotely, volume adjustable	24 V = **645 850 55**		

ORDER SPECIFICATIONS TERMINAL ELEMENTS:

Terminal element for tube mounting	**CAGE CLAMP®**	**Screw connection**
including cap	**640 810 00**	**640 830 00**
Terminal element for bracket or base mounting		
including cap and seal	**640 800 00**	**640 820 00**

Accessories for Signal Tower Kombi*SIGN* 71

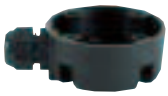























ORDER SPECIFICATIONS:	
Contact box for cable exit at side, with mounting material	**975 840 01**
Contact box with magnetic base and cable exit at side	**975 840 04**
Bracket for base mounting, with cable gland	**960 000 01**
Bracket for surface mounting, with cable gland	**960 000 02**
Bracket for 1-sided mounting incl. rubber seal	**975 840 85**
Bracket for 2-sided mounting incl. rubber seal	**975 840 86**
Tube ø 25 mm, all anodized aluminium	
100 mm long	**975 845 10**
250 mm long	**975 840 25**
400 mm long	**975 840 40**
800 mm long	**975 840 80**
Base for tube mounting ø 25 mm, plastic incl. rubber seal	**975 840 90**
Base for tube mounting ø 25 mm, metal incl. rubber seal	**975 840 91**
Base with integrated tube, ø 25 mm, 110 mm long, plastic incl. rubber seal	**975 840 10**
Adapter for tube mounting ø 25 mm / 1/2" screw	**975 840 02**
Cable gland for surface mounting M 16 x 1,5	**960 000 04**

Phone +49 74 24 / 95 57 0 . Fax +49 74 24 / 95 57 44