884 Revolving Signal Beacon



- Greater signal effect particularly in poor conditions thanks to three light beams
- Low rotation rate
- Three Fresnel lenses effect light convergence and optimise visibility
- High impact resistance to 20 Joules

TECHNICAL SPECIFICATIONS:

Dimensions (Ø x Height):	142 m x 218 mm
Housing:	PC/ABS-Blend
Lens:	PC, transparent
Fixing:	Base mounting, bracket mounting, tube mounting (accessory)
Connection:	Screw terminal with wire protection max. 2.5 mm²
Cable entry:	Cable diameter 5-7 mm
Drive:	Wheel and disc drive, motor in centre of gravity
Halogen bulb:	G 6.35 35 W 12 V / 24 V
Mirror rotation rate:	60 r.p.m.
Service life of drive:	> 5,000 hrs
Duty cycle:	100 %

Halogen bulb included in assembly.

ORDER SPECIFICATIONS:

Voltage	24 V AC/DC	230 V AC
Current consumption	1.6 A	0.17 A
red	**884 100 75**	**884 100 68**
green	**884 200 75**	**884 200 68**
yellow	**884 300 75**	**884 300 68**
blue	**884 500 75**	**884 500 68**

Further colours and voltages on request.



Bracket (accessory)



Plastic bracket, adaptor for tube mounting and wire guard (accessories)

ACCESSORIES:

Plastic bracket for wall mounting	**975 883 06**
Adaptor for tube mounting	**975 883 09**
Base for tube mounting	**975 840 91**
Tube, Ø 25 mm, 100 mm long	**975 845 10**
Tube, Ø 25 mm, 250 mm long	**975 840 25**
Wire guard, only for base mounting	**975 883 08**

SPARE PARTS:

Halogen bulb 35 W/12 V for 230 V AC	**955 883 34**
Halogen bulb 35 W/24 V for 24 V AC/DC	**955 883 35**



3 Fresnel lenses are set at a 120° angle

TECHNICAL DIAGRAMS:

see page 325

Sizes of Rotating Beacons



See note on page 347

883 Rotating Mirror Beacon



- Extreme durability thanks to lowwear wheel and disc drive
- Adaptor for tube mounting (accessory)
- Installation without the need to disassemble the mechanism
- High impact resistance to 20 Joules

TECHNICAL SPECIFICATIONS:

Dimensions (Ø x Height):	142 mm x 218 mm
Housing:	PC/ABS-Blend
Lens:	PC, transparent
Fixing:	Base mounting, bracket mounting, tube mounting (accessory)
Connection:	Screw terminal with wire protection max. 2.5 mm²
Cable entry:	Cable diameter 5-7 mm
Drive:	Wheel and disc drive, motor in centre of gravity
Halogen bulb:	G 6.35 35 W 12 V / 24 V
Mirror rotation rate:	c. 180 r.p.m.
Service life of drive:	> 5,000 hrs
Duty cycle:	100 %

Halogen bulb included in assembly.



Bracket (accessory)

ORDER SPECIFICATIONS:

Voltage	12 V DC	24 V AC/DC	115 V AC/DC	230 V AC
Current consumpt.	3 A	1.6 A	0.35 A	0.17 A
red	**883 100 54**	**883 100 75**	**883 100 77**	**883 100 68**
green	**883 200 54**	**883 200 75**	**883 200 77**	**883 200 68**
yellow	**883 300 54**	**883 300 75**	**883 300 77**	**883 300 68**
blue	**883 500 54**	**883 500 75**	**883 500 77**	**883 500 68**

Further colours and voltages on request.

ACCESSORIES:

Plastic bracket for wall mounting	**975 883 06**
Adaptor for tube mounting	**975 883 09**
Base for tube mounting	**975 840 91**
Tube, Ø 25 mm, 100 mm long	**975 845 10**
Tube, Ø 25 mm, 250 mm long	**975 840 25**
Wire guard, only for base mounting	**975 883 08**



Plastic bracket, adaptor for tube mounting and wire guard (accessories)

SPARE PARTS:

Halogen bulb 35 W/12 V for 12 V DC, 115 V AC/DC, 230 V AC	**955 883 34**
Halogen bulb 35 W/24 V for 24 V AC/DC	**955 883 35**



Low wear wheel and disc drive

TECHNICAL DIAGRAMS:

see page 325

Sizes of Rotating Beacons



See note on page 347

WERMA SIGNALTECHNIK

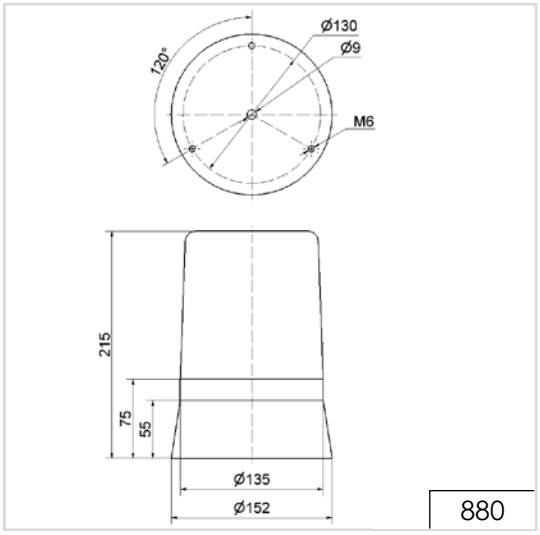

880

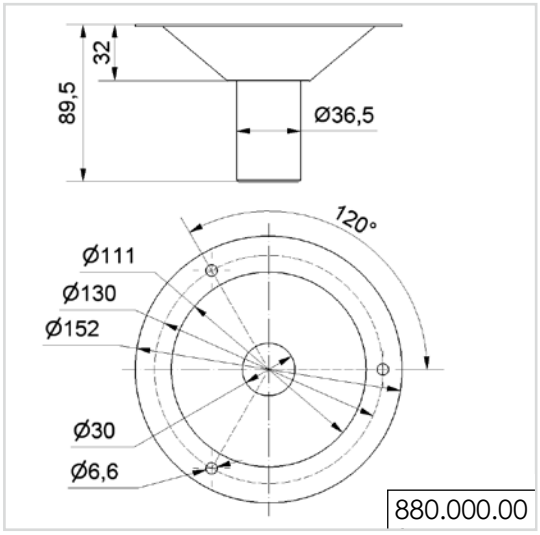

880.000.00

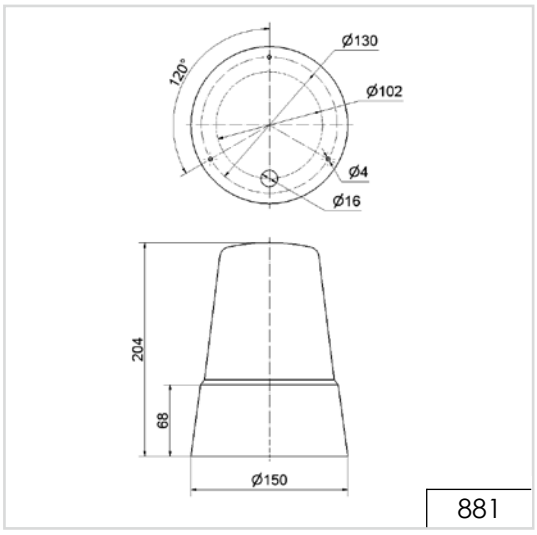

881

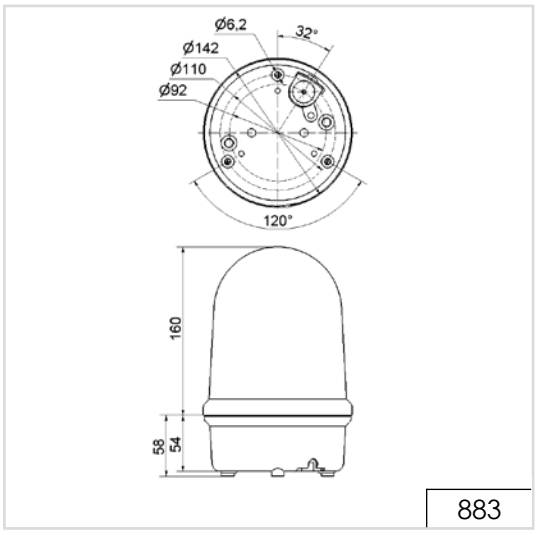

883

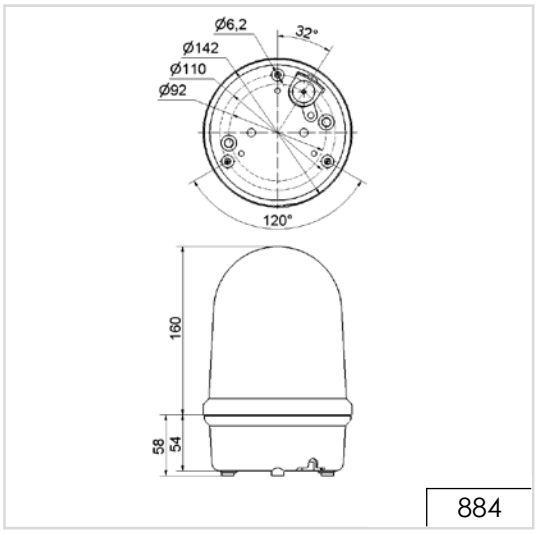

884

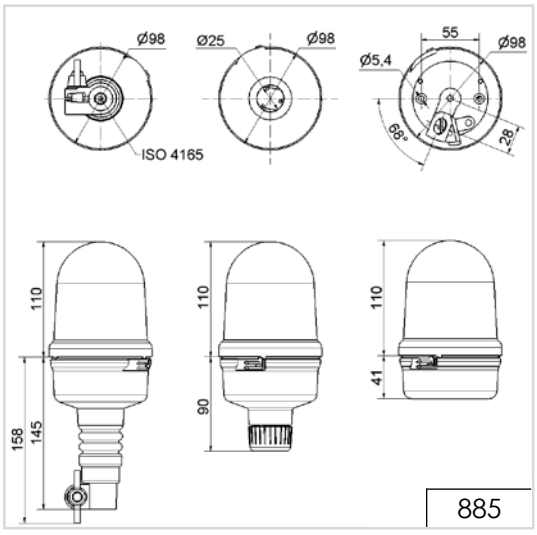

885

ADDITIONAL INFORMATION:

You are welcome to request the technical diagrams in digital form. The relevant 3D models, instruction leaflets and connection diagrams can be obtained from us or downloaded from our homepage at any time.

Technical Diagrams

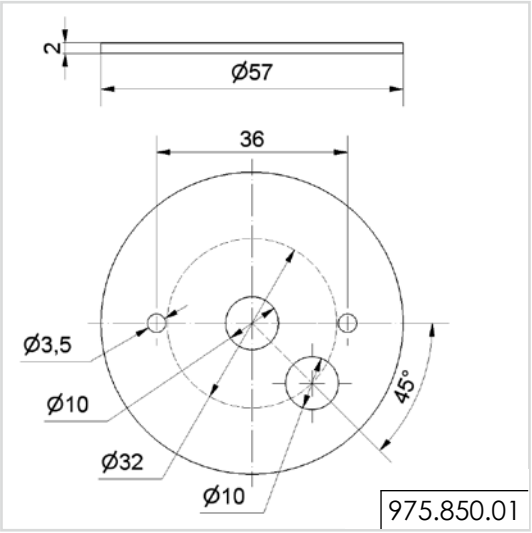

975.850.01

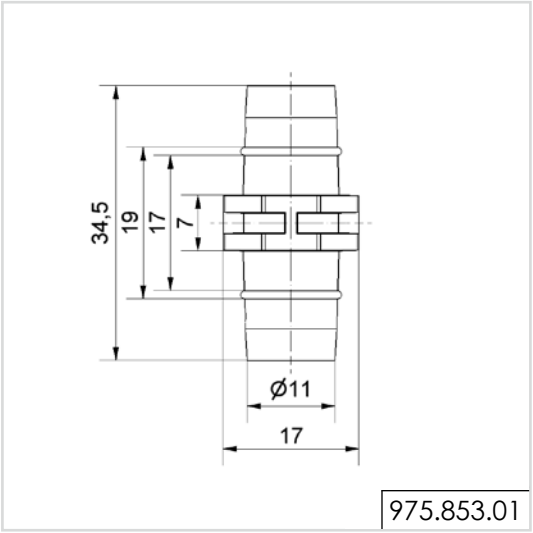

975.853.01

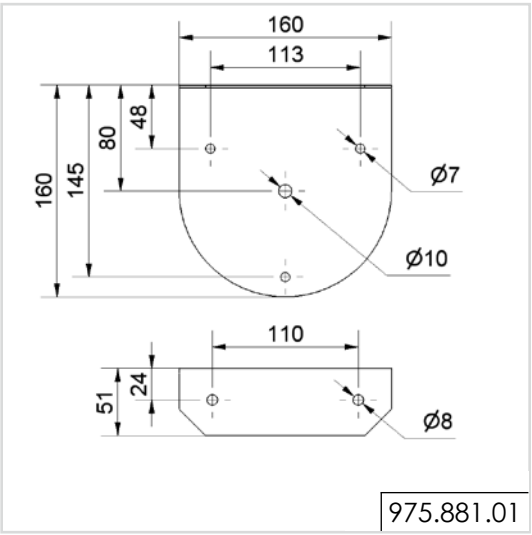

975.881.01

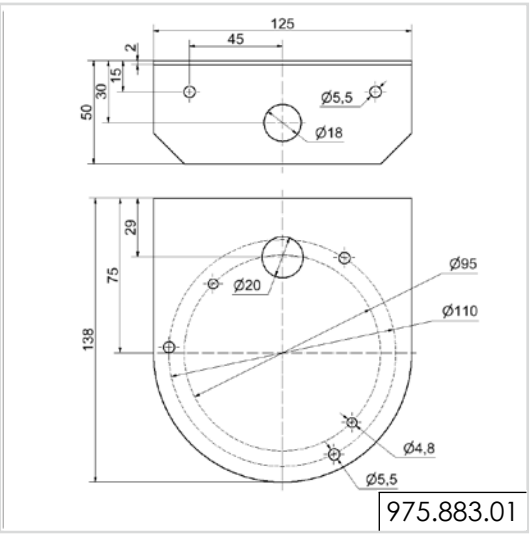

975.883.01

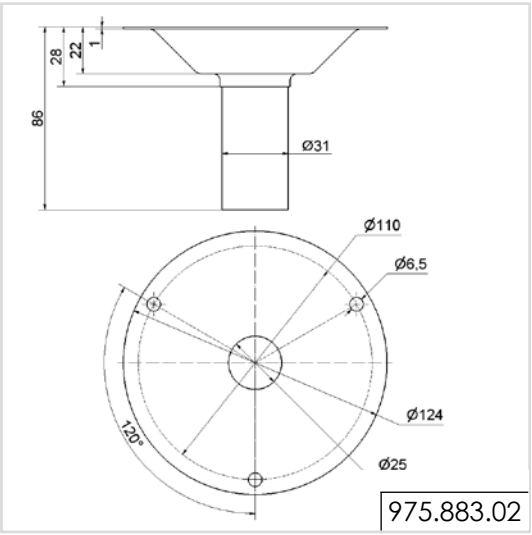

975.883.02

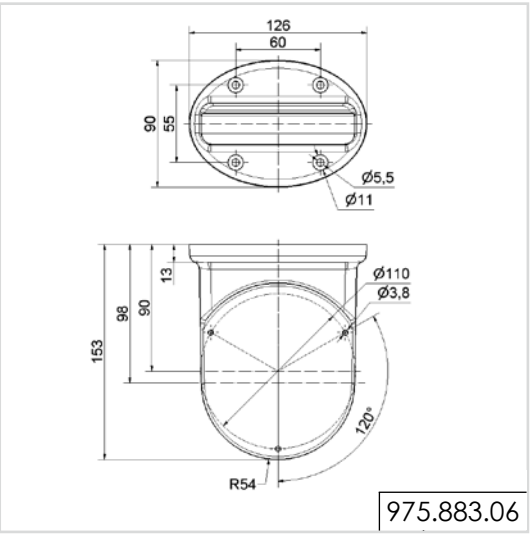

975.883.06

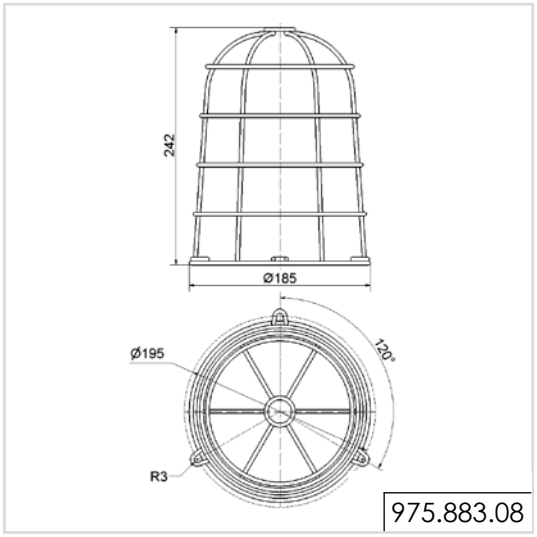

975.883.08

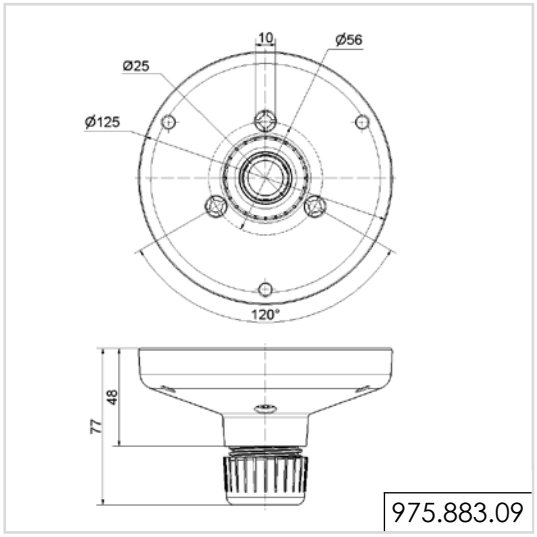

975.883.09

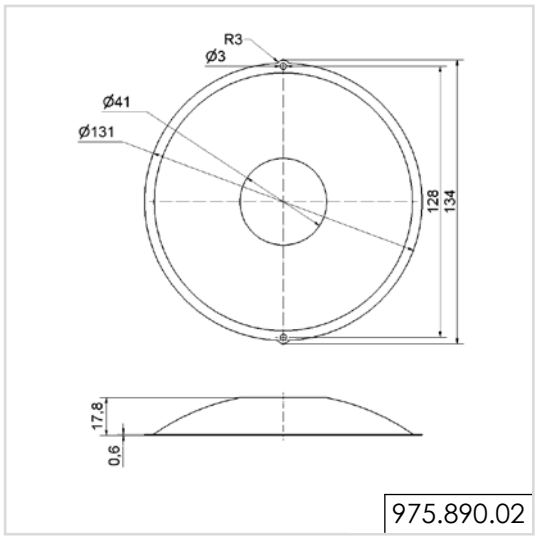

975.890.02

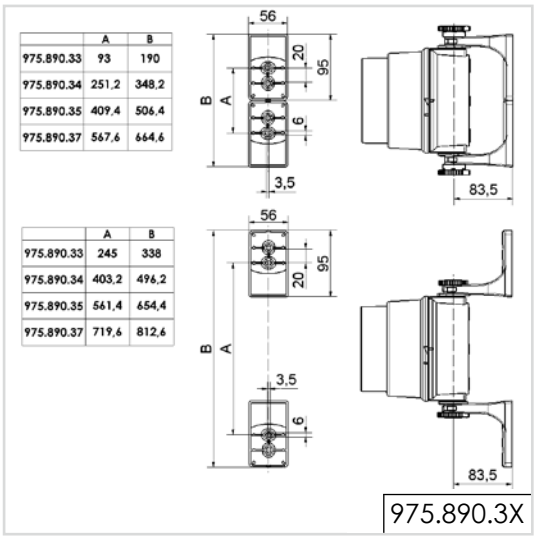

975.890.3X

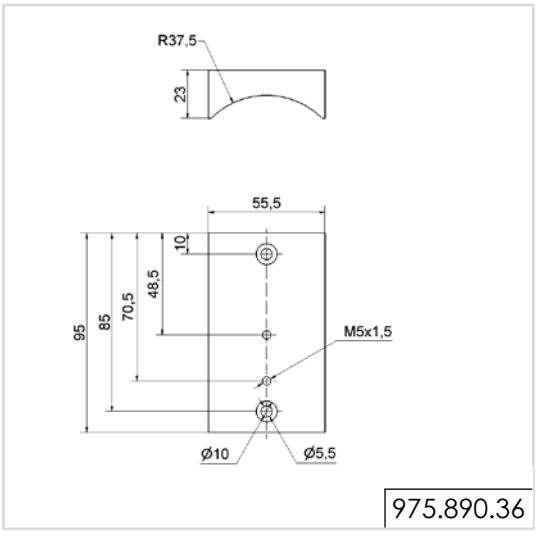

975.890.36

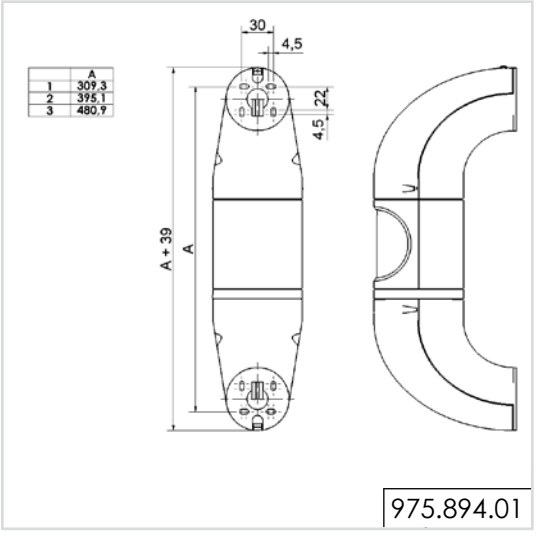

975.894.01

ADDITIONAL INFORMATION:

You are welcome to request the technical diagrams in digital form. The relevant 3D models, instruction leaflets and connection diagrams can be obtained from us or downloaded from our homepage at any time.