This is how to select your signal tower

▸ STEP 1
Select the signal tower of your choice with or without buzzer, with the appropriate connection, housing colour, voltage and number of tiers.

Part numbers can be found on pages 74 and 75.



- 2-5 tiers
- With or without buzzer
- M12 plug or cable
- Black or silver finish

▸ STEP 2
Select up to two extension tubes.

optional:



Extension tube, black
Order no. **960 698 02**

Extension tube, silver finish
Order no. **960 698 04**

▸ STEP 3
Select the appropriate fixing accessories for your application, using for example a tube and base or a bracket mount.

Single Hole Mounting | **Bracket Mounting** | **Base Mounting**



Bracket for base mounting
Order no. **960 698 05**



Base with integrated tube, black
Order no. **960 698 01**



Base with integrated tube, silver finish
Order no. **960 698 03**

▸ STEP 4
Where appropriate, select the bracket and the contact box.



Bracket for base mounting with concealed cable entry
Order no. **960 000 14**



Contact box for cable exit at side
Order no. **975 840 01**



Bracket for tube mounting
Order no. **960 000 01**



Contact box with magnetic base and cable exit at side
Order no. **975 840 04**

NEW



Corner fixing bracket
Order no. **960 000 41**

TIP

The Signal Devices Site on the internet: www.werma.com
On the signal tower pages of www.werma.com use the selection tool „Configurator" to select the Kompakt 37 signal tower according to your requirements. With the help of intuitive questions and pictures you will be able to make your choice with just a few mouse clicks.

698/699 LED Signal Tower KOMPAKT 37



- Pre-assembled signal tower with max. 5 tiers
- With or without buzzer
- LED permanent light
- Available with M12 plug or cable connection
- Also available in metal finish and clear lens

TECHNICAL SPECIFICATIONS:

Life duration up to 50,000 hrs

Dimensions (Ø x Height):	2 tier: 37.5 mm x 127.5 mm 3 tier: 37.5 mm x 161.5 mm 4 tier: 37.5 mm x 195.5 mm 5 tier: 37.5 mm x 229.5 mm (Protrusion from panel)
Housing:	PC
Fixing:	Single hole mounting for Ø 22.5 mm (M22 x 1.5 mm) Base or bracket mounting (accessory)
Connection:	Cable connection: Cable, 2 m long, Plug connection: M12 Plug (2/3 tier: 5 pole; 4/5 tier: 8 pole)
Current consumption:	50 mA per tier / buzzer

Nut and seal included in assembly.



Two tier Kompakt 37 with integral tube and base (accessory)



Three tier Kompakt 37 with bracket (accessory)

ORDER SPECIFICATIONS:

KOMPAKT 37 with coloured lens and buzzer

		Connection	24 V AC/DC	12 V AC/DC
2 tier	green/red	Cable	**699 120 75**	**699 120 74**
	yellow/red	Cable	**699 130 75**	**699 130 74**
	green/red	Plug	**699 220 75**	**699 220 74**
	yellow/red	Plug	**699 230 75**	**699 230 74**
3 tier	green/yellow/red	Cable	**699 110 75**	**699 110 74**
	green/yellow/red	Plug	**699 210 75**	**699 210 74**
4 tier	clear/green/yellow/red	Cable	**699 140 75**	
	blue/green/yellow/red	Cable	**699 150 75**	
	clear/green/yellow/red	Plug	**699 240 75**	
	blue/green/yellow/red	Plug	**699 250 75**	
5 tier	blue/clear/green/yellow/red	Cable	**699 160 75**	
	blue/clear/green/yellow/red	Plug	**699 260 75**	

KOMPAKT 37 with coloured lens and without buzzer

		Connection	24 V AC/DC	12 V AC/DC
2 tier	green/red	Cable	**698 120 75**	**698 120 74**
	yellow/red	Cable	**698 130 75**	**698 130 74**
	green/red	Plug	**698 220 75**	**698 220 74**
	yellow/red	Plug	**698 230 75**	**698 230 74**
3 tier	green/yellow/red	Cable	**698 110 75**	**698 110 74**
	green/yellow/red	Plug	**698 210 75**	**698 210 74**
4 tier	clear/green/yellow/red	Cable	**698 140 75**	
	blue/green/yellow/red	Cable	**698 150 75**	
	clear/green/yellow/red	Plug	**698 240 75**	
	blue/green/yellow/red	Plug	**698 250 75**	
5 tier	blue/clear/green/yellow/red	Cable	**698 160 75**	
	blue/clear/green/yellow/red	Plug	**698 260 75**	

12 V-Versions: available in May 2014

WERMA SIGNALTECHNIK



The height of the KOMPAKT 37 can be increased by max. 160 mm with the use of extension tubes, ensuring optimum visibility

ORDER SPECIFICATIONS:

KOMPAKT 37 in silver finish with clear lens and buzzer

		Connection	24 V AC/DC	12 V AC/DC
2 tier	green/red	Cable	**699 320 75**	**699 320 74**
	yellow/red	Cable	**699 330 75**	**699 330 74**
	green/red	Plug	**699 420 75**	**699 420 74**
	yellow/red	Plug	**699 430 75**	**699 430 74**
3 tier	green/yellow/red	Cable	**699 310 75**	**699 310 74**
	green/yellow/red	Plug	**699 410 75**	**699 410 74**
4 tier	clear/green/yellow/red	Cable	**699 340 75**	
	blue/green/yellow/red	Cable	**699 350 75**	
	clear/green/yellow/red	Plug	**699 440 75**	
	blue/green/yellow/red	Plug	**699 450 75**	
5 tier	blue/clear/green/yellow/red	Cable	**699 360 75**	
	blue/clear/green/yellow/red	Plug	**699 460 75**	

KOMPAKT 37 in silver finish with clear lens and without buzzer

		Connection	24 V AC/DC	12 V AC/DC
2 tier	green/red	Cable	**698 320 75**	**698 320 74**
	yellow/red	Cable	**698 330 75**	**698 330 74**
	green/red	Plug	**698 420 75**	**698 420 74**
	yellow/red	Plug	**698 430 75**	**698 430 74**
3 tier	green/yellow/red	Cable	**698 310 75**	**698 310 74**
	green/yellow/red	Plug	**698 410 75**	**698 410 74**
4 tier	clear/green/yellow/red	Cable	**698 340 75**	
	blue/green/yellow/red	Cable	**698 350 75**	
	clear/green/yellow/red	Plug	**698 440 75**	
	blue/green/yellow/red	Plug	**698 450 75**	
5 tier	blue/clear/green/yellow/red	Cable	**698 360 75**	
	blue/clear/green/yellow/red	Plug	**698 460 75**	

12 V-Versions: available in May 2014

ACCESSORIES:

Base with integrated tube, black	**960 698 01**
Extension tube, black	**960 698 02**
Base with integrated tube, silver finish	**960 698 03**
Extension tube, silver finish	**960 698 04**
Fixing bracket	**960 698 05**
Cable 5 m with M12 plug (5 pole)	**960 693 05**
Cable 5 m with M12 plug (8 pole)	**960 000 47**
Cable 5 m with M12 connector and plug (8 pole)	**960 000 46**

Further accessories can be found on page 79.

TECHNICAL DIAGRAMS:

see page 312

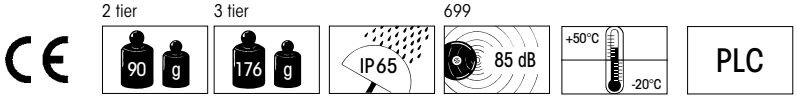

Technical Diagrams

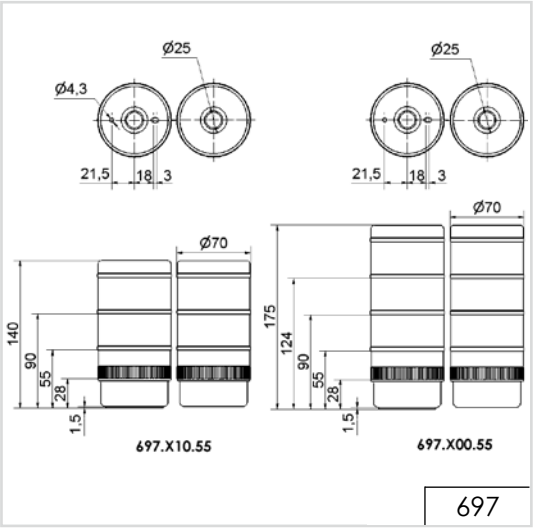

697

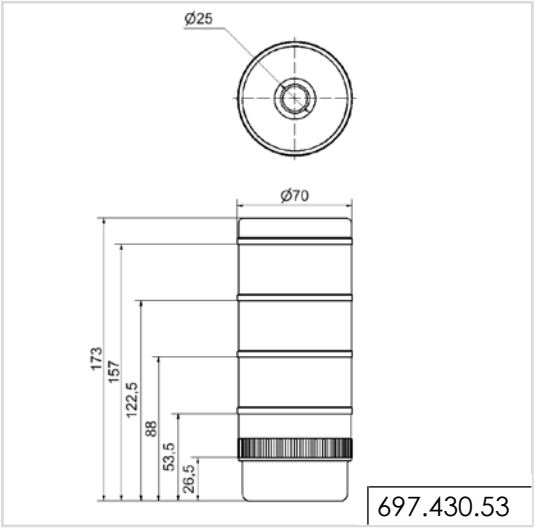

697.430.53

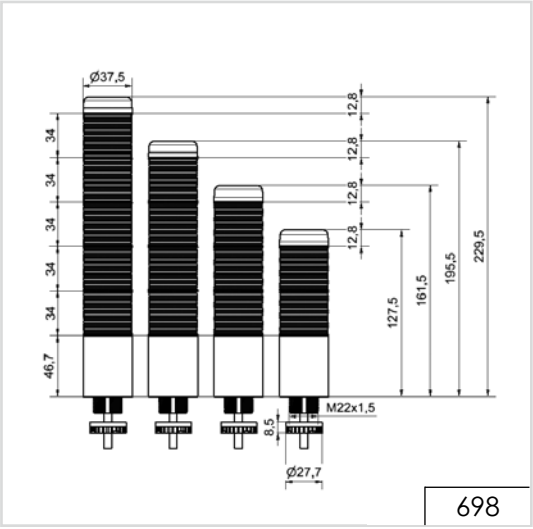

698

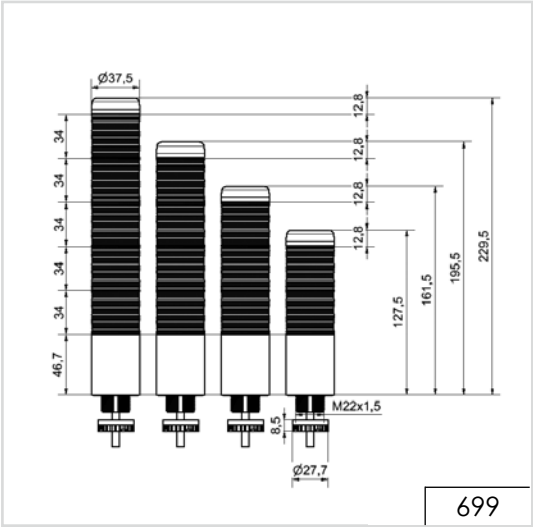

699

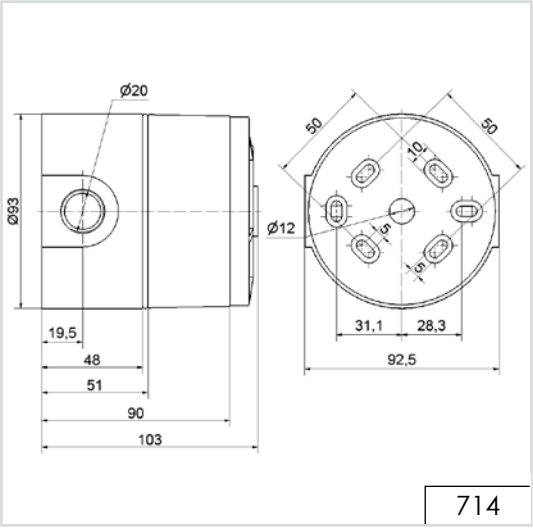

714

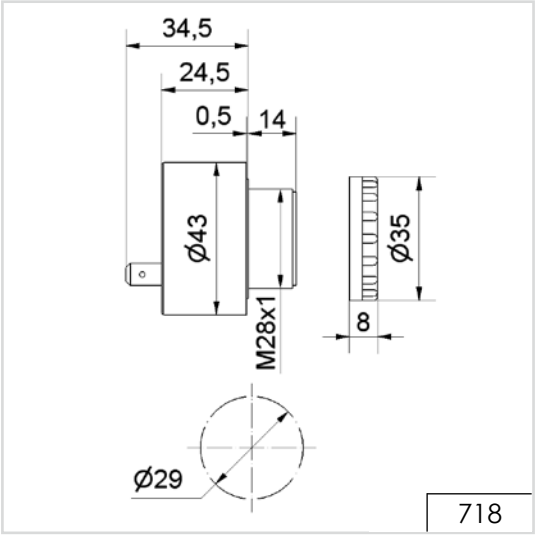

718

WERMA SIGNALTECHNIK

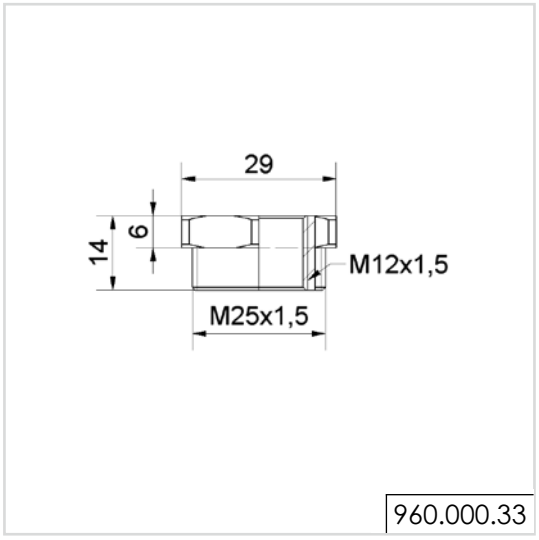

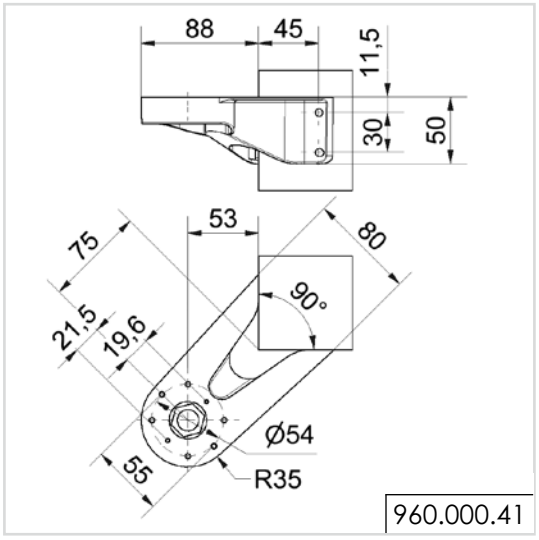

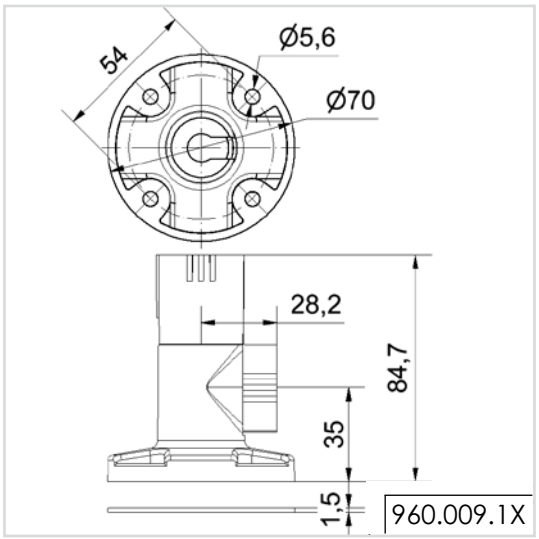

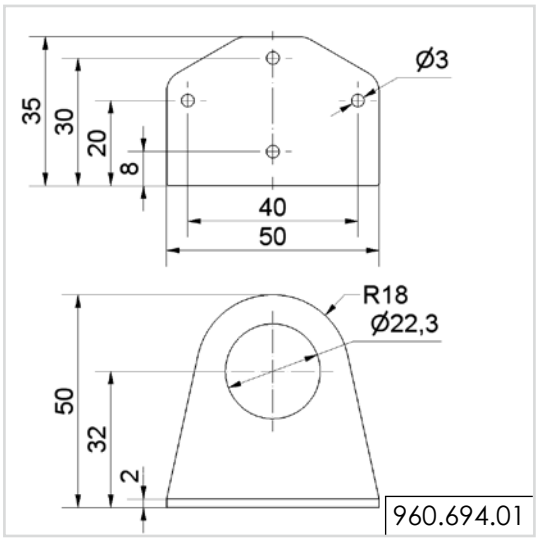

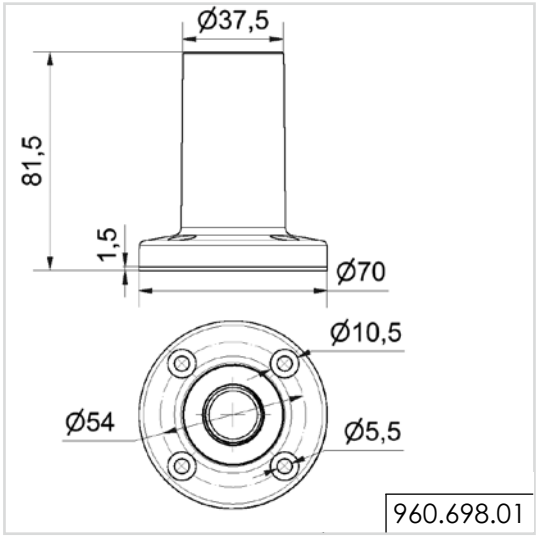

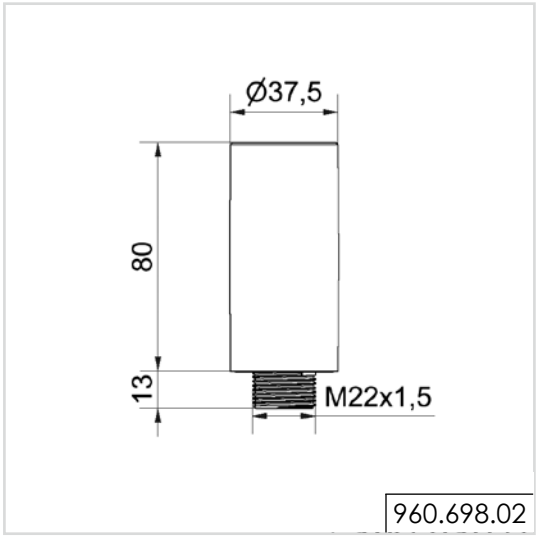

ADDITIONAL INFORMATION:

You are welcome to request the technical diagrams in digital form. The relevant 3D models, instruction leaflets and connection diagrams can be obtained from us or downloaded from our homepage at any time.

Technical Diagrams

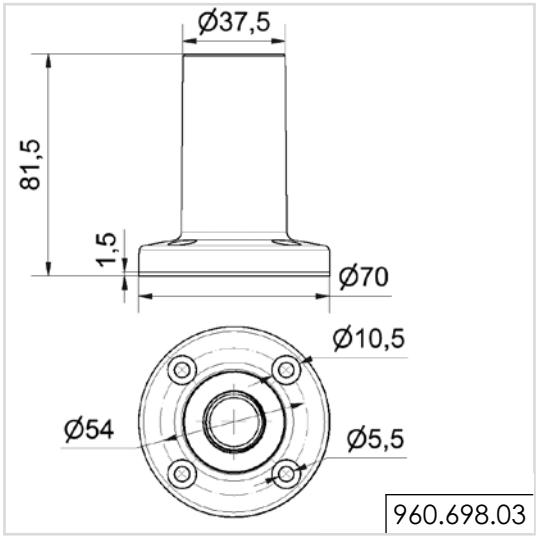

960.698.03

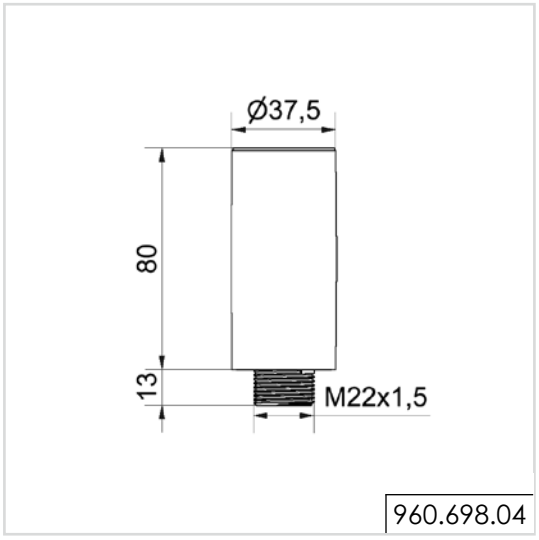

960.698.04

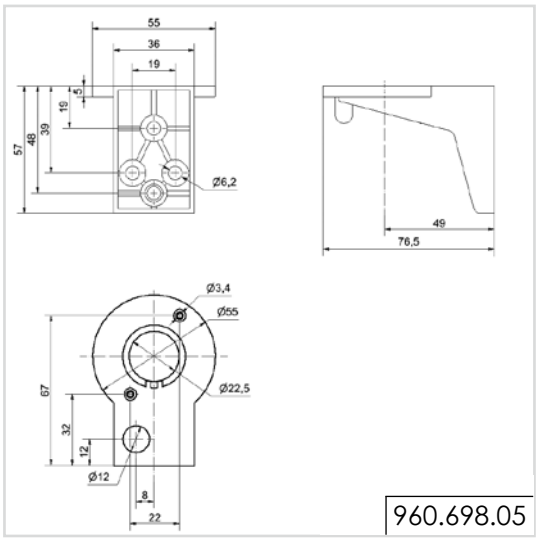

960.698.05

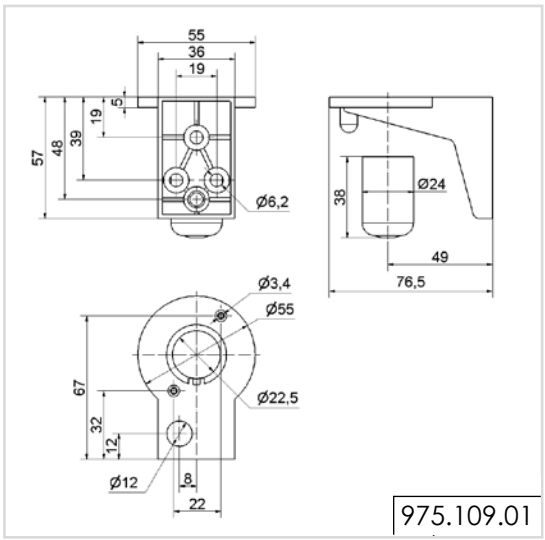

975.109.01

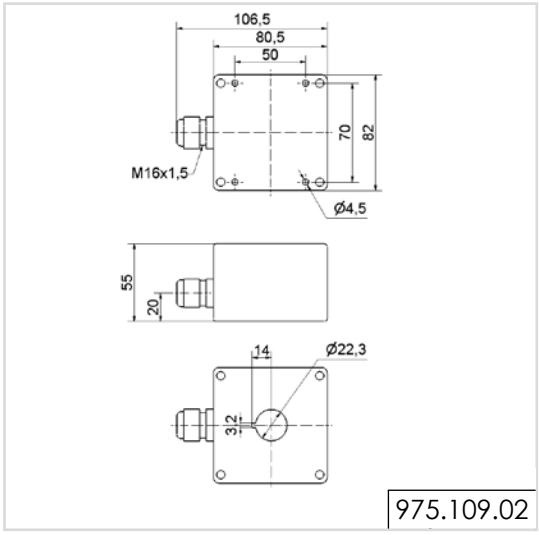

975.109.02

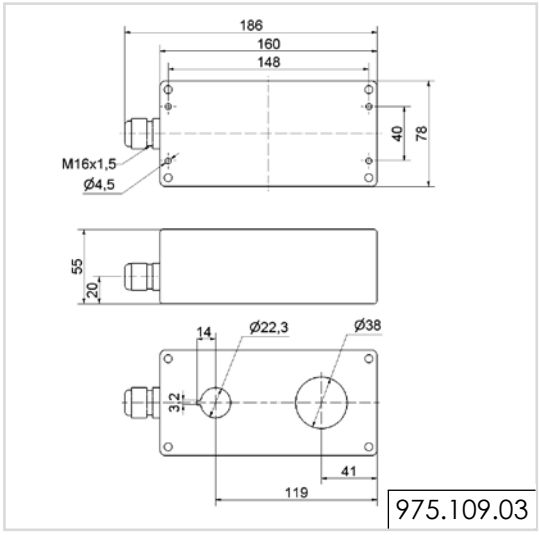

975.109.03

WERMA SIGNALTECHNIK

WERMA SIGNALTECHNIK 698/699

EN 60947-5-1

698 210 75

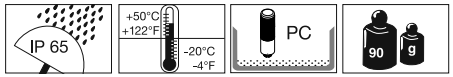

699 110 75



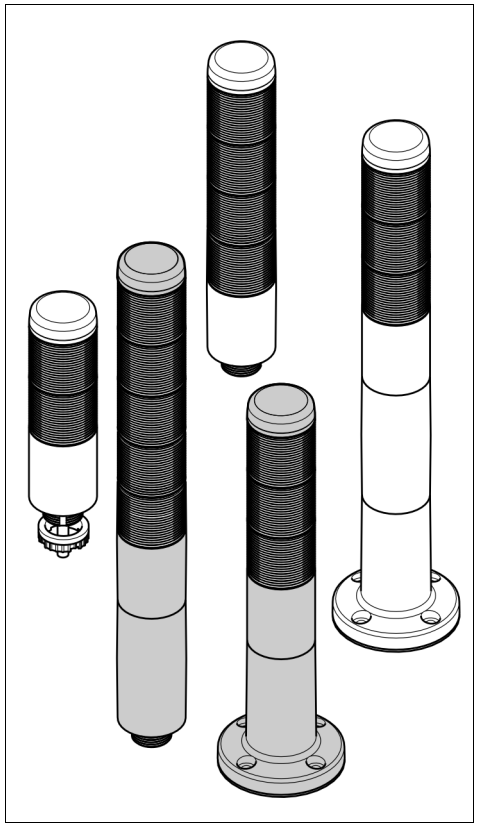

310.698.001.1013 © (D)

WERMA SIGNALTECHNIK

WERMA Signaltechnik GmbH + Co. KG
D-78604 Rietheim-Weilheim
Telefon +49 (0)7424 / 9557-0
Telefax +49 (0)7424 / 9557-44
info@werma.com
www.werma.com

310_698_001_13-10.fm 30.9.13 www.krea-team.de

(D) Anschluss **ausschließlich** durch ausgebildete Elektro-Fachkräfte.
(GB) Electrical connection is to be made by trained electrical specialists **only**.
(F) Le branchement doit **uniquement** être effectué par des professionnels.
(I) Il collegamento deve essere eseguito **solo** da elettricisti specializzati.
(E) La conexión **sólo** debe ser realizada por electricistas debidamente formados.
(PT) A ligação deve ser feita **exclusivamente** por profissional eléctrico especializado.
(NL) De aansluiting mag **enkel** gebeuren door erkende vakmensen.
(CZ) Připojení smí **provádět** pouze kvalifikovaný personál.
(PL) Podłączenie **wyłącznie** przez specjalistów-elektryków.
(FI) Liittäminen kuuluu **ainoastaan** koulutettujen sähköalan ammattilaisten tehtäviin.
(RUS) Подключение проводится только специалистом-электриком.
(TR) Bağlantı **sadece** eğitimli elektrik teknisyenleri tarafından yapılmalıdır.
(CN) 布线需由专业电工执行

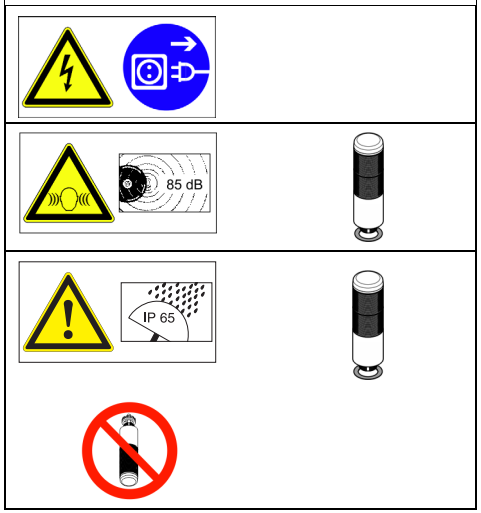

698 X20 75 698 X30 75	24 V=, I_0 < 100 mA < 2 x 50 mA
698 X20 74 698 X30 74	12 V=, I_0 < 250 mA < 2 x 125 mA
699 X20 75 699 X30 75	24 V=, I_0 < 150 mA < 3 x 50 mA
699 X20 74 699 X30 74	12 V=, I_0 < 350 mA < 2 x 125 mA + < 1 x 100 mA
698 X10 75	24 V=, I_0 < 150 mA < 3 x 50 mA
698 X10 74	12 V=, I_0 < 360 mA < 3 x 120 mA
699 X10 75	24 V=, I_0 < 200 mA < 4 x 50 mA
699 X10 74	12 V=, I_0 < 460 mA < 3 x 120 mA + < 1 x 100 mA
698 X40 75 698 X50 75	24 V=, I_0 < 200 mA < 4 x 50 mA
699 X40 75 699 X50 75	24 V=, I_0 < 250 mA < 5 x 50 mA
698 X60 75	24 V=, I_0 < 250 mA < 5 x 50 mA
699 X60 75	24 V=, I_0 < 300 mA < 6 x 50 mA

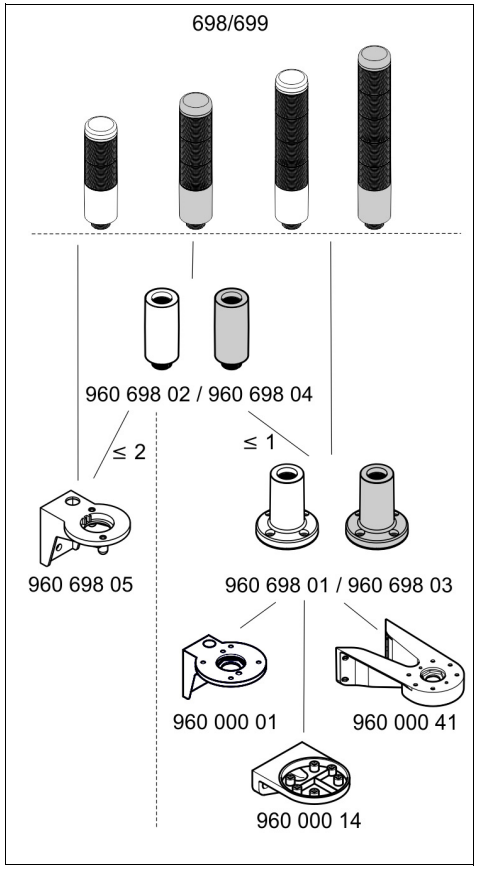

1

1a - 698/699
1b - 698/699 + 960 698 05
1c - 698/699 + 960 698 02/960 698 04
1d - 698/699 + 960 698 01/960 698 03
1e - 960 000 01
1f - 960 000 41

1a

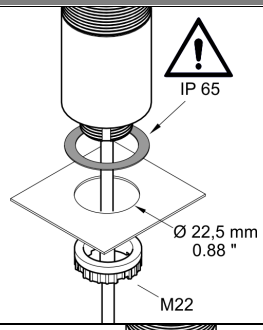

1b

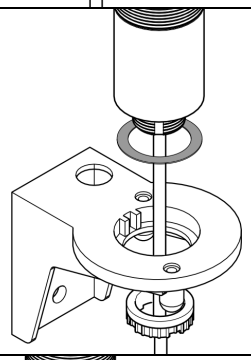

1c

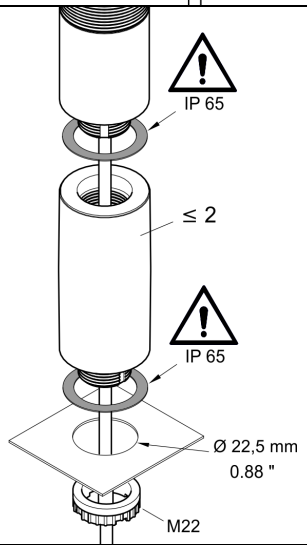

1d

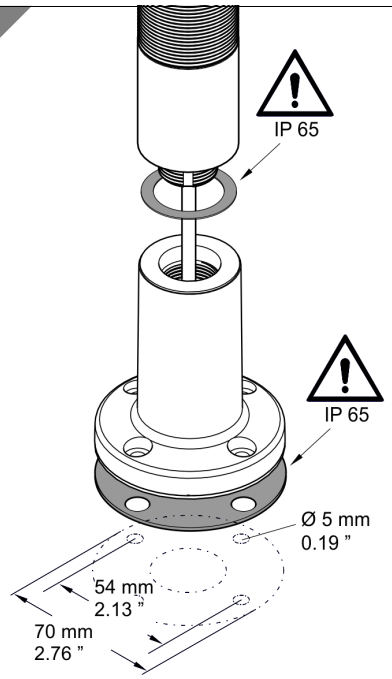

1e

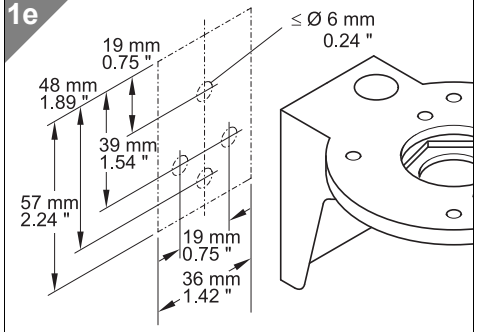

1f

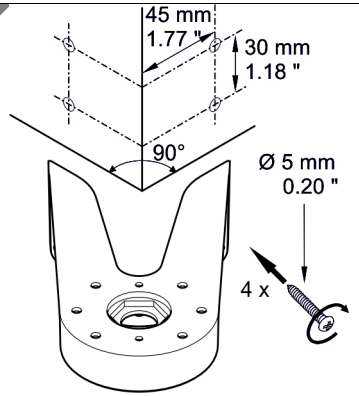

2

2a - 69x 120 xx, 69x 320 xx, 69x 130 xx, 69x 330 xx
2b - 69x 220 xx, 69x 420 xx, 69x 230 xx 69x 430 xx
2c - 69x 110 xx, 69x 310 xx
2d - 69x 210 xx, 69x 410 xx
2e - 69x 140 xx, 69x 340 xx, 69x 150 xx, 69x 350 xx
2f - 69x 240 xx, 69x 440 xx, 69x 250 xx, 69x 450 xx
2g - 69x 160 xx, 69x 360 xx
2h - 69x 260 xx, 69x 460 xx

2a

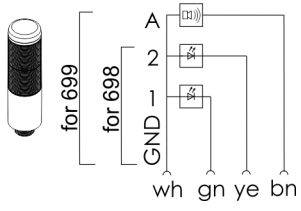

2b

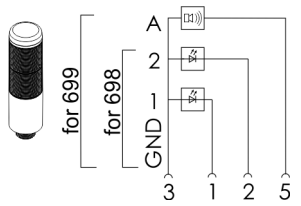

2c

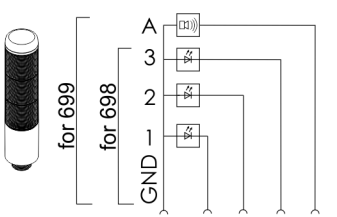

2d

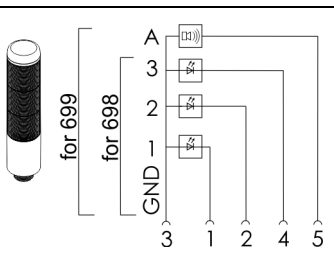

2e

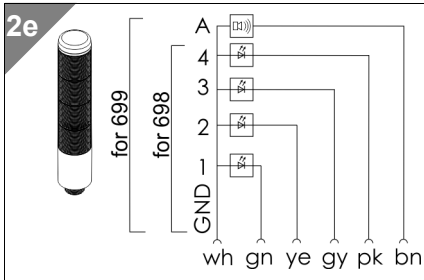

2f

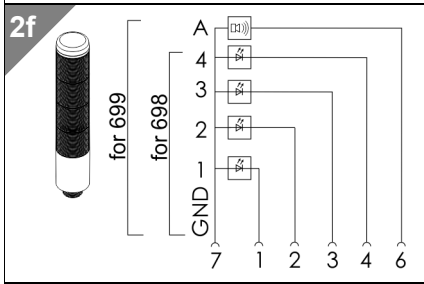

2g

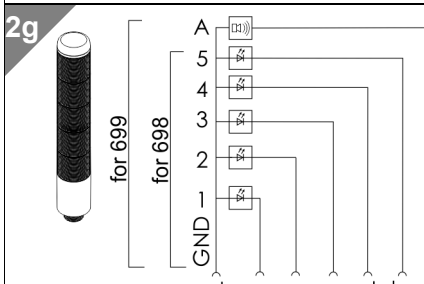

2h

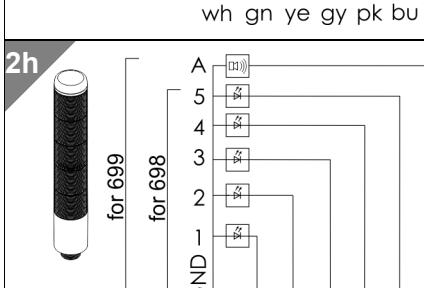

310.698.001.1013
©

WERMA SIGNALTECHNIK