Absolute encoders – multiturn

Standard
electronic multiturn, optical | **Sendix F5868 / F5888 (shaft / hollow shaft)** | **Modbus**

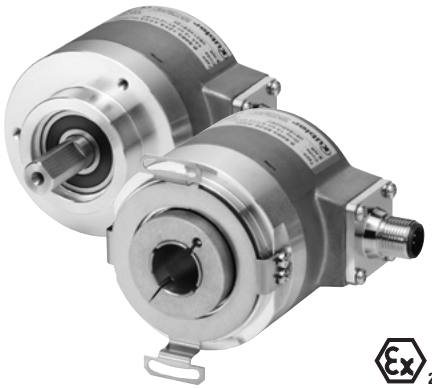

The Sendix F58 multiturn with patented Intelligent Scan Technology™ is a particularly high resolution optical multiturn encoder without gears and with 100 percent magnetic insensitivity.

32 bits total resolution, through hollow shaft up to 15 mm and Modbus RTU interface.

Ex 2/22 | cULus | RoHS | Modbus



Multiturn resolution | Safety-Lock™ | High rotational speed | Temperature range | High protection level | High shaft load capacity | Shock / vibration resistant | Magnetic field proof | Reverse polarity protection | Intelligent Scan Technology™ | Surface protection salt spray tested optional

Reliable and insensitive

- Sturdy bearing construction in Safety-Lock™ design for resistance against vibration and installation errors.
- Ideal for use outdoors thanks to IP67 protection and wide temperature range from -40°C up to +80°C.
- Patented Intelligent Scan Technology™ with all singleturn and multiturn functions on one single OptoASIC - offering the highest reliability, a high resolution up to 32 bits and 100 % magnetic field insensitivity.

Current Modbus performance

- Modbus register for configuration of the node address and baud rate.
- Scaling function.
- 32 bits total resolution (16 bit MT + 16 bit ST).
- Preset function.
- Diagnostic functions.
- Limit switch function.

Order code Shaft version

8.F5868	.	X	X	6	E	.	61	1	2
Type		a	b	c	d		e		

a *Flange*
1 = clamping flange, IP65 ø 58 mm [2.28“]
3 = clamping flange, IP67 ø 58 mm [2.28“]
2 = synchro flange, IP65 ø 58 mm [2.28“]
4 = synchro flange, IP67 ø 58 mm [2.28“]

b *Shaft (ø x L), with flat*
1 = 6 x 10 mm [0.24 x 0.39“]
2 = 10 x 20 mm [0.39 x 0.79“]
3 = 1/4“ x 7/8“
4 = 3/8“ x 7/8“

c *Interface / power supply*
6 = Modbus RTU, 10 ... 30 V DC

d *Type of connection*
E = 1 x radial M12 connector, 5-pin

e *Fieldbus profile* [1)]
61 = Modbus RTU Application Protocol V1.1b3

Optional on request
- Ex 2/22
- surface protection salt spray tested

Order code Hollow shaft

8.F5888	.	X	X	6	E	.	61	1	2
Type		a	b	c	d		e		

a *Flange*
1 = with spring element, long, IP65
2 = with spring element, long, IP67
3 = with stator coupling, IP65 ø 65 mm [2.56“]
4 = with stator coupling, IP67 ø 65 mm [2.56“]
5 = with stator coupling, IP65 ø 63 mm [2.48“]
6 = with stator coupling, IP67 ø 63 mm [2.48“]

b *Hollow shaft*
3 = ø 10 mm [0.39“]
4 = ø 12 mm [0.47“]
5 = ø 14 mm [0.55“]
6 = ø 15 mm [0.59“]

c *Interface / power supply*
6 = Modbus RTU, 10 ... 30 V DC

d *Type of connection*
E = 1 x radial M12 connector, 5-pin

e *Fieldbus profile* [1)]
61 = Modbus RTU Application Protocol V1.1b3

Optional on request
- Ex 2/22
- surface protection salt spray tested

1) Parameters can also be factory pre-set.

© Fritz Kübler GmbH, subject to errors and changes. 07/2015

Standard electronic multiturn, optical	Sendix F5868 / F5888 (shaft / hollow shaft)	Modbus

Mounting accessory for shaft encoders		Order no.
Coupling	bellows coupling ø 19 mm [0.75"] for shaft 6 mm [0.24"]	**8.0000.1102.0606**
	bellows coupling ø 19 mm [0.75"] for shaft 10 mm [0.39"]	**8.0000.1102.1010**

Mounting accessory for hollow shaft encoders		Order no.
Cylindrical pin, long for torque stops	with fixing thread	**8.0010.4700.0000**

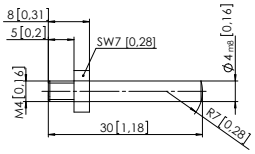

Connection technology		Order no.
Connector, self-assembly (straight)	coupling M12 for bus in	**8.0000.5116.0000**
Cordset, pre-assembled	M12, for bus in, 2 m [6.56'] PVC cable	**05.00.6091.A211.002M**

Further accessories can be found in the accessories section or in the accessories area of our website at: www.kuebler.com/accessories.
Additional connectors can be found in the connection technology section or in the connection technology area of our website at: www.kuebler.com/connection_technology.

Technical data

Mechanical characteristics

Maximum speed shaft version		
	IP65 up to 70°C	12000 min^{-1}, 10000 min^{-1} (continuous)
	IP65 up to T_{max}	8000 min^{-1}, 5000 min^{-1} (continuous)
	IP67 up to 70°C	11000 min^{-1}, 9000 min^{-1} (continuous)
	IP67 up to T_{max}	8000 min^{-1}, 5000 min^{-1} (continuous)
Maximum speed hollow shaft version		
	IP65 up to 70°C	9000 min^{-1}, 6000 min^{-1} (continuous)
	IP65 up to T_{max}	6000 min^{-1}, 3000 min^{-1} (continuous)
	IP67 up to 70°C	8000 min^{-1}, 4000 min^{-1} (continuous)
	IP67 up to T_{max}	4000 min^{-1}, 2000 min^{-1} (continuous)
Starting torque at 20°C [68°F]	IP65	< 0.01 Nm
	IP67	< 0.05 Nm
Mass moment of inertia		
	shaft version	3.0 x 10^{-6} kgm^2
	hollow shaft version	6.0 x 10^{-6} kgm^2
Load capacity of shaft	radial	80 N
	axial	40 N
Weight		approx. 0.45 kg [15.87 oz]
Protection acc. to EN 60529		
	housing side	IP67
	shaft side	IP65, opt. IP67
Working temperature range		-40°C ... +80°C [-40°F ... +176°F]
Material	shaft/hollow shaft	stainless steel
	flange	aluminium
	housing	zinc die-cast
Shock resistance acc. to EN 60068-2-27		2500 m/s^2, 6 ms
Vibration resistance acc. to EN 60068-2-6		100 m/s^2, 55 ... 2000 Hz

Electrical characteristics

Power supply	10 ... 30 V DC
Power consumption (no load)	max. 80 mA
Reverse polarity protection of the power supply	yes
UL approval	file 224618
CE compliant acc. to	EMC guideline 2004/108/EC RoHS guideline 2011/65/EU

Diagnostic LED (two-colour, red/green)

LED ON or blinking	red	error display
	green	status display
	combination red / green	error code

Interface characteristics Modbus

Resolution singleturn	1 ... 65536 (16 bit), scaleable default: 65536 (16 bit)
Number of revolutions (multiturn)	max. 65536 (16 bit) scalable only via the total resolution
Total resolution	1 ... 4.294.967.296 (32 bit), scaleable
Code	binary
Interface	Modbus V1.02
Protocol	Modbus RTU V1.1b3
Baud rate	9600 ... 115200 kbit/s software configurable
Node address	1 ... 63 software configurable
Termination	software configurable

© Fritz Kübler GmbH, subject to errors and changes. 07/2015

Standard
electronic multiturn, optical | **Sendix F5868 / F5888 (shaft / hollow shaft)** | **Modbus**

Read holding register

Register	Data name
40257	Baud rate Number Data Parity Stopbits
40261	Comm Update
40262	Node Address
40263	Node Update
40264	Presetvalue
40266	Preset Update
40267	Count Direct
40268	Count Update
40269	Termination
40270	Term Update

Write holding register

Register	Data name
40275	Lower Limit
40276	Upper Limit
40277	Compare Activ
40278	MUR (MSB)
40279	MUR (LSB)
40280	TMR (MSB)
40281	TMR (LSB)
40282	Scaling Function
40283	Delay Prescaler

Modbus Communication Profile V 1.02

- Node address, baud rate and bus termination programmable.

Modbus Application Protocol V1.1b3

The following parameters can be programmed:

- 2 working areas with 2 upper and lower limits and the corresponding output states.
- Extended failure management for position sensing.
- User interface with visual display of bus and failure status.
- “Watchdog controlled” device.
- Extended diagnostic modes.

Terminal assignment

Interface	Type of connection	1 x M12 connector						
6	E Bus in	Signal:	0 V power supply	+V power supply	D0	D1	TG	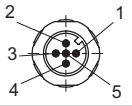
		Pin:	3	2	5	4	1	

© Fritz Kübler GmbH, subject to errors and changes. 07/2015

Standard
electronic multiturn, optical | **Sendix F5868 / F5888 (shaft / hollow shaft)** | **Modbus**

Dimensions shaft version

Dimensions in mm [inch]

Synchro flange, ø 58 [2.28]
Flange type 2 and 4

1 M4, 6 [0.24] deep

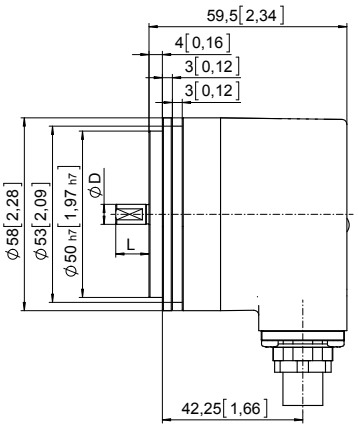

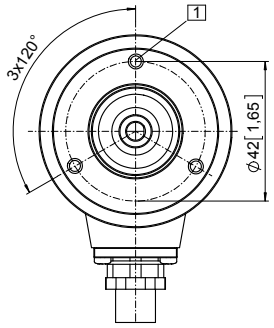

D	L	Fit
6 [0.24]	10 [0.39]	h7
10 [0.39]	20 [0.79]	f7
1/4“	7/8“	h7
3/8“	7/8“	h7

Clamping flange, ø 58 [2.28]
Flange type 1 and 3

1 3 x M3, 6 [0.24] deep
2 3 x M4, 8 [0.32] deep

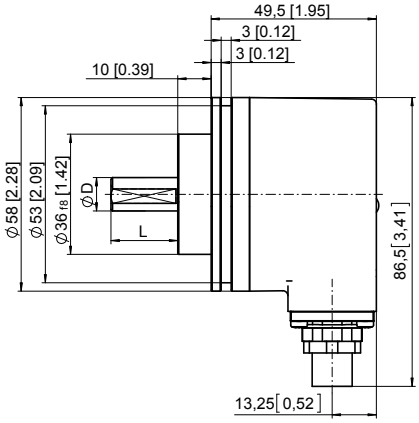

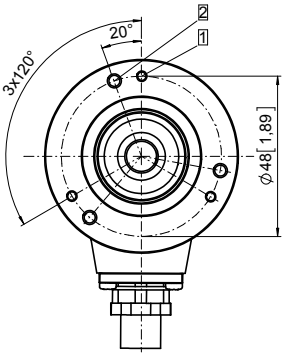

D	L	Fit
6 [0.24]	10 [0.39]	h7
10 [0.39]	20 [0.79]	f7
1/4“	7/8“	h7
3/8“	7/8“	h7

© Fritz Kübler GmbH, subject to errors and changes. 07/2015

Standard
electronic multiturn, optical | **Sendix F5868 / F5888 (shaft / hollow shaft)** | **Modbus**

Dimensions hollow shaft version

Dimensions in mm [inch]

Flange with spring element, long
Flange type 1 and 2

1 M3, 6 [0.24] deep

2 Torque stop slot, recommendation: cylindrical pin DIN 7, ø 4 [0.16]

3 Recommended torque for the clamping ring 0.6 Nm

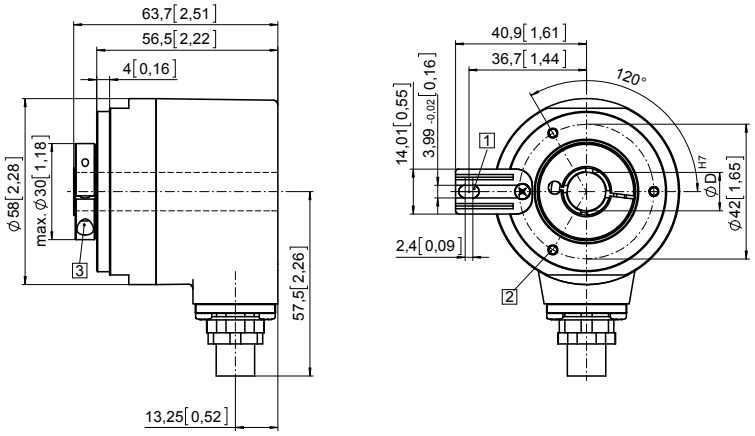

Flange with stator coupling, ø 63 [2.48]
Flange type 5 and 6

1 Recommended torque for the clamping ring 0.6 Nm

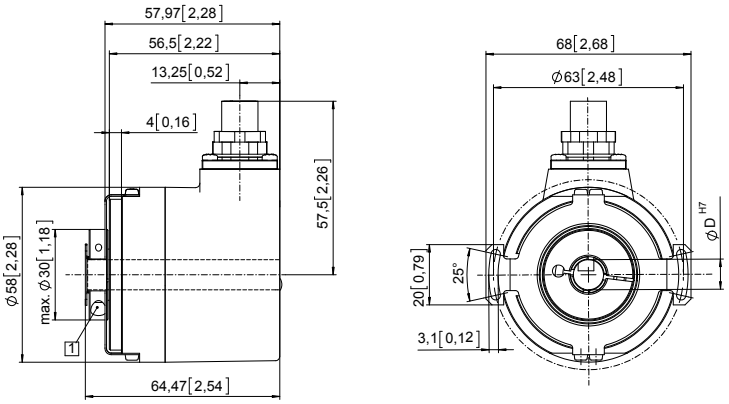

© Fritz Kübler GmbH, subject to errors and changes. 07/2015