SIEMENS

Data sheet 3SE5000-0AD04

ACTUATOR HEAD FOR POSITION SWITCH 3SE51/52 ROLLER PLUNGER W. STAINLESS STEEL ROLLER 10MM



Product designation	actuator head for position switch
Manufacturer's article number	
• of the supplied actuator head for position switches	3SE5000-0AD04

General technical data:	
Product function	
• positive opening	Yes
Shock resistance	
• acc. to IEC 60068-2-27	30 g / 11 ms
Vibration resistance	
• acc. to IEC 60068-2-6	0.35 mm/5g
Mechanical service life (switching cycles)	
• typical	15 000 000
Equipment marking	
• acc. to DIN EN 61346-2	T
• acc. to DIN EN 81346-2	T
Active principle	mechanical
Minimum actuating force in activation direction	20 N

Changes preserved
© Copyright Siemens AG

Enclosure:	
Coating of the enclosure	Other types

Drive Head:	
Standard-compliant actuator head	EN 50047, design C
Shape of the switch head	roller
Outer diameter of the switch head	10 mm

Communication/ Protocol:	
Design of the interface	without

Ambient conditions:	
Ambient temperature	
• during operation	-25 ... +85 °C
• during storage	-40 ... +90 °C

Installation/ mounting/ dimensions:	
Mounting position	any
Mounting type	lockable plug-in fixing

Certificates/approvals

General Product Approval			Declaration of Conformity	Test Certificates	other
CSA	UL	EAC	EG-Konf.	spezielle Prüfbescheinigungen	Bestätigungen

Further information

Information- and Downloadcenter (Catalogs, Brochures,…)
http://www.siemens.com/industrial-controls/catalogs

Industry Mall (Online ordering system)
https://mall.industry.siemens.com/mall/en/en/Catalog/product?mlfb=3SE50000AD04

Cax online generator
http://support.automation.siemens.com/WW/CAXorder/default.aspx?lang=en&mlfb=3SE50000AD04

Service&Support (Manuals, Certificates, Characteristics, FAQs,...)
https://support.industry.siemens.com/cs/ww/en/ps/3SE50000AD04

Image database (product images, 2D dimension drawings, 3D models, device circuit diagrams, EPLAN macros, ...)
http://www.automation.siemens.com/bilddb/cax_de.aspx?mlfb=3SE50000AD04&lang=en

Changes preserved
© Copyright Siemens AG

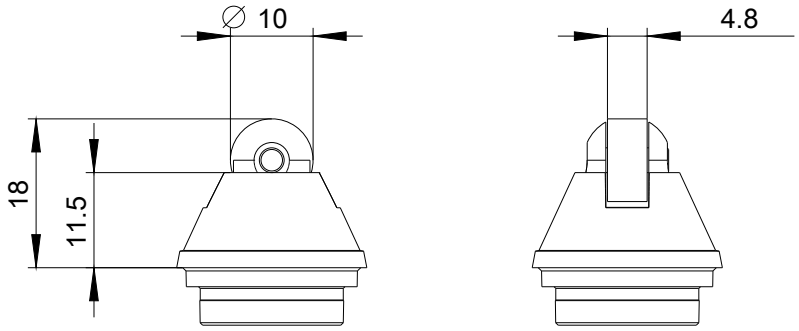

last modified: 11.03.2016

Changes preserved
© Copyright Siemens AG