SIEMENS

## Data sheet 3SE5000-0AE12

ACTUATOR HEAD FOR POSITION SWITCH 3SE51/52 ROLLER LEVER W. STAINLESS STEEL LEVER AND PLASTIC ROLLER 13MM



| | |
|---|---|
| **Product designation** | actuator head for position switch |
| **Manufacturer's article number** | |
| • of the supplied actuator head for position switches | 3SE5000-0AE12 |

| General technical data: | |
|---|---|
| **Product function** | |
| • positive opening | Yes |
| **Shock resistance** | |
| • acc. to IEC 60068-2-27 | 30 g / 11 ms |
| **Vibration resistance** | |
| • acc. to IEC 60068-2-6 | 0.35 mm/5g |
| **Mechanical service life (switching cycles)** | |
| • typical | 15 000 000 |
| **Equipment marking** | |
| • acc. to DIN EN 61346-2 | T |
| • acc. to DIN EN 81346-2 | T |
| **Active principle** | mechanical |
| **Minimum actuating force in activation direction** | 10 N |


Changes preserved
© Copyright Siemens AG

| Enclosure: | |
|---|---|
| **Coating of the enclosure** | Other types |

| Drive Head: | |
|---|---|
| **Standard-compliant actuator head** | EN 50047, design E |
| **Shape of the switch head** | roller |
| **Outer diameter of the switch head** | 13 mm |

| Communication/ Protocol: | |
|---|---|
| **Design of the interface** | without |

| Ambient conditions: | |
|---|---|
| **Ambient temperature** | |
| • during operation | -25 ... +85 °C |
| • during storage | -40 ... +90 °C |

| Installation/ mounting/ dimensions: | |
|---|---|
| **Mounting position** | any |
| **Mounting type** | lockable plug-in fixing |

## Certificates/approvals

| General Product Approval | | | Declaration of Conformity | Test Certificates | other |
|---|---|---|---|---|---|
| CSA | UL | EAC | EG-Konf. | spezielle Prüfbescheinigungen | Bestätigungen |

| other |
|---|
| Schwingen / Schocken |

## Further information

**Information- and Downloadcenter (Catalogs, Brochures,…)**
http://www.siemens.com/industrial-controls/catalogs

**Industry Mall (Online ordering system)**
https://mall.industry.siemens.com/mall/en/en/Catalog/product?mlfb=3SE50000AE12

**Cax online generator**
http://support.automation.siemens.com/WW/CAXorder/default.aspx?lang=en&mlfb=3SE50000AE12

**Service&Support (Manuals, Certificates, Characteristics, FAQs,...)**
https://support.industry.siemens.com/cs/ww/en/ps/3SE50000AE12

**Image database (product images, 2D dimension drawings, 3D models, device circuit diagrams, EPLAN macros, ...)**
http://www.automation.siemens.com/bilddb/cax_de.aspx?mlfb=3SE50000AE12&lang=en


Changes preserved
© Copyright Siemens AG

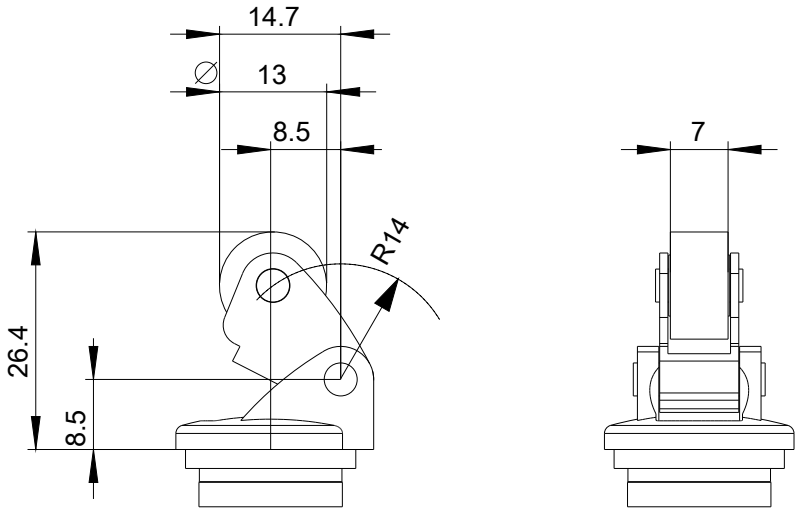


**last modified:** 11.03.2016


Changes preserved
© Copyright Siemens AG