SIEMENS

## Data sheet 3SE5122-0CH82



SIRIUS POSITION SWITCH METAL ENCLOSURE 56MM WIDE DEVICE CONNECTION 3X (M20X1.5) 1NO/ 1NC SNAP-ACTION CONTACTS ROTARY ACTUATOR RIGHT/LEFT ADJUSTABLE, ROD ACTUATOR PLASTIC 200MM LONG

| | |
|---|---|
| **Product designation** | standard position switch |
| **Manufacturer's article number** | |
| • of the supplied basic switch | 3SE5122-0CA00 |
| • of the supplied actuator head for position switches | 3SE5000-0AH00 |
| • of the supplied operating lever | 3SE5000-0AA82 |
| • of the supplied switching contacts | 3SE5000-0CA00 |
| • of the supplied empty enclosure with cover | 3SE5122-0AA00 |

| General technical data: | |
|---|---|
| **Product function** | |
| • positive opening | No |
| **Insulation voltage** | |
| • rated value | 400 V |
| **Surge voltage resistance rated value** | 6 kV |
| **Protection class IP** | IP65/IP67 |
| **Degree of pollution** | class 3 |
| **Shock resistance** | |
| • acc. to IEC 60068-2-27 | 30 g / 11 ms |
| **Vibration resistance** | |


Changes preserved
© Copyright Siemens AG

| | |
|---|---|
| • acc. to IEC 60068-2-6 | 0.35 mm/5g |
| **Mechanical service life (switching cycles)** | |
| • typical | 15 000 000 |
| **Electrical endurance (switching cycles)** | |
| • at AC-15 at 230 V typical | 100 000 |
| **Electrical endurance (switching cycles) with contactor 3RH11, 3RT1016, 3RT1017, 3RT1024, 3RT1025, 3RT1026 typical** | 10 000 000 |
| **Electrical operating cycles in one hour with contactor 3RH11, 3RT1016, 3RT1017, 3RT1024, 3RT1025, 3RT1026** | 6 000 |
| **Thermal current** | 6 A |
| **Equipment marking** | |
| • acc. to DIN EN 61346-2 | B |
| • acc. to DIN EN 81346-2 | B |
| **Continuous current of the C characteristic MCB** | 1 A; for a short-circuit current smaller than 400 A |
| **Continuous current of the quick DIAZED fuse link** | 10 A; for a short-circuit current smaller than 400 A |
| **Continuous current of the DIAZED fuse link gG** | 6 A |
| **Active principle** | mechanical |
| **Repeat accuracy** | 0.05 mm |
| **Minimum actuating torque in activation direction** | 0.25 N·m |
| **Operating current at AC-15** | |
| • at 24 V rated value | 6 A |
| • at 125 V rated value | 6 A |
| • at 230 V rated value | 6 A |
| • at 400 V rated value | 4 A |
| **Operating current at DC-13** | |
| • at 24 V rated value | 3 A |
| • at 125 V rated value | 0.55 A |
| • at 230 V rated value | 0.27 A |
| • at 400 V rated value | 0.1 A |

## Enclosure:

| | |
|---|---|
| **Design of the housing** | block, wide |
| **Material of the enclosure** | metal |
| **Coating of the enclosure** | cathodic immersion coating |
| **Design of the housing acc. to standard** | No |

## Drive Head:

| | |
|---|---|
| **Standard-compliant actuator head** | EN 50041, design D |
| **Shape of the switch head** | roller |

## Connections/ Terminals:

| | |
|---|---|
| **Type of electrical connection** | screw-type terminals |

## Mechanical data:


Changes preserved
© Copyright Siemens AG

| | |
|---|---|
| **Cable entry type** | 3 x (M20 x 1.5) |

## Communication/ Protocol:

| | |
|---|---|
| **Design of the interface** | without |

## Ambient conditions:

| | |
|---|---|
| **Ambient temperature** | |
| • during operation | -25 ... +85 °C |
| • during storage | -40 ... +90 °C |

## Installation/ mounting/ dimensions:

| | |
|---|---|
| **Mounting position** | any |
| **Mounting type** | screw fixing |

## Certificates/approvals

| General Product Approval | | | | Functional Safety/Safety of Machinery | Declaration of Conformity |
|---|---|---|---|---|---|
| CCC | CSA | UL | EAC | Baumusterprüfbescheinigung | EG-Konf. |

| Test Certificates | other |
|---|---|
| spezielle Prüfbescheinigungen | Bestätigungen |

## Further information

**Information- and Downloadcenter (Catalogs, Brochures,…)**
http://www.siemens.com/industrial-controls/catalogs

**Industry Mall (Online ordering system)**
https://mall.industry.siemens.com/mall/en/en/Catalog/product?mlfb=3SE51220CH82

**Cax online generator**
http://support.automation.siemens.com/WW/CAXorder/default.aspx?lang=en&mlfb=3SE51220CH82

**Service&Support (Manuals, Certificates, Characteristics, FAQs,...)**
https://support.industry.siemens.com/cs/ww/en/ps/3SE51220CH82

**Image database (product images, 2D dimension drawings, 3D models, device circuit diagrams, EPLAN macros, ...)**
http://www.automation.siemens.com/bilddb/cax_de.aspx?mlfb=3SE51220CH82&lang=en


Changes preserved
© Copyright Siemens AG

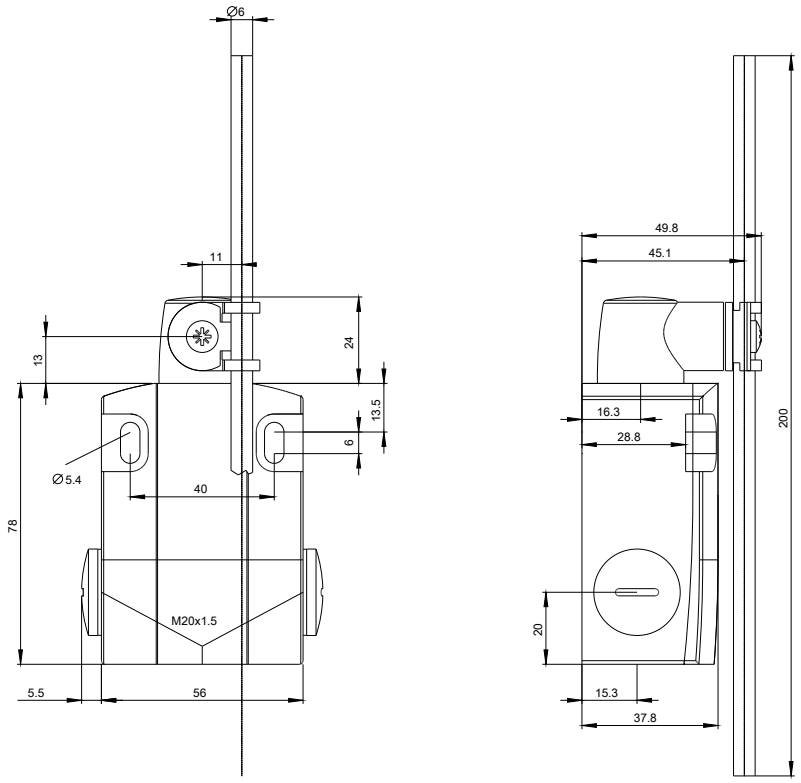


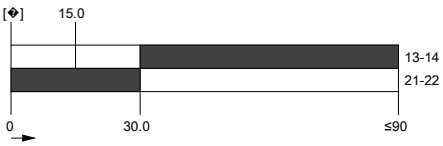


**last modified:** 11.03.2016


Changes preserved
© Copyright Siemens AG