

IME08-1B5PSZW2K

IME

INDUCTIVE PROXIMITY SENSORS

IME08-1B5PSZW2K | IME

INDUCTIVE PROXIMITY SENSORS



Illustration may differ

Ordering information

Type	Part no.
IME08-1B5PSZW2K	1040839

Other models and accessories www.sick.com/IME

Detailed technical data

Features

Housing	Cylindrical thread design
Thread size	M8 x 1
Diameter	Ø 8 mm
Sensing range S_n	≤ 1.5 mm
Safe sensing range S_a	1.215 mm
Installation type	Flush
Switching frequency	4,000 Hz
Connection type	Cable, 3-wire, 2 m
Output type	PNP
Output function	NO
Electrical wiring	DC 3-wire
Enclosure rating	IP 67 [1]

[1] According to EN 60529.

Mechanics/electronics

Supply voltage	10 V DC ... 30 V DC
Ripple	≤ 10 %
Voltage drop	≤ 2 V [1]
Current consumption	≤ 10 mA [2]
Time delay before availability	≤ 100 ms
Hysteresis	5 % ... 15 %
Repeatability	≤ 2 % [3] [4]
Temperature drift (of S_r)	± 10 %
EMC	According to EN 60947-5-2

[1] At I_a max.

[2] Without load.

[3] Ub and Ta constant.

[4] Of Sr.

Continuous current I_a	≤ 200 mA
Cable material	PVC
Short-circuit protection	✓
Reverse polarity protection	✓
Power-up pulse protection	✓
Shock and vibration resistance	30 g, 11 ms/10 Hz ... 55 Hz, 1 mm
Ambient operating temperature	–25 °C ... +75 °C
Housing material	Metal, Nickel-plated brass
Sensing face material	Plastic, Plastic
Housing length	43 mm
Thread length	25 mm
Tightening torque, max.	Typ. 5 Nm
UL File No.	NRKH.E181493

[1] At I_a max.
[2] Without load.
[3] Ub and Ta constant.
[4] Of Sr.

Reduction factors

Note	The values are reference values which may vary
St37 steel (Fe)	1
Stainless steel (V2A, 304)	Approx. 0.8
Aluminum (Al)	Approx. 0.45
Copper (Cu)	Approx. 0.4
Brass (Br)	Approx. 0.4

Installation note

Remark	Associated graphic see "Installation"
B	8 mm
C	8 mm
D	4.5 mm
F	12 mm

Installation note

Flush installation

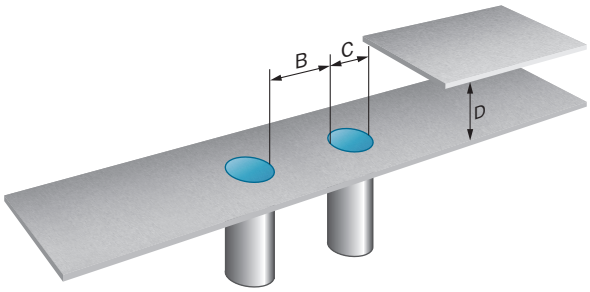

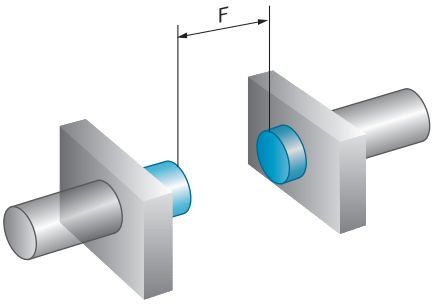

Connection diagram

Cd-001

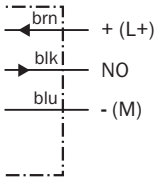

UL-Certificate

UL approval

Dimensional drawing (Dimensions in mm (inch))

IME08 Short-body housing, cable, flush

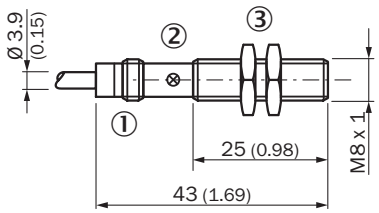

① Connection
② Indication LED
③ Fastening nuts (2x); width across 13, metal

Recommended accessories

Other models and accessories www.sick.com/IME

	Brief description	Type	Part no.
Universal bar clamp systems			

	Brief description	Type	Part no.
	Universal bar clamp for mounting bars with 12 mm diameter, Zinc diecast, without mounting plate and screws	BEF-KHS-KH3	5322626
Mounting brackets and mounting plates			
	Mounting plate for M8 sensors, steel, zinc coated, without mounting hardware	BEF-WG-M08	5321722
	Mounting bracket, M8 thread, steel, zinc coated, without mounting hardware	BEF-WN-M08	5321721
Terminal and alignment brackets			
	Clamping block for round sensors M8, without fixed stop, plastic (PA12), glass-fiber reinforced, mounting hardware included	BEF-KH-M08	2051477
	Clamping block for round sensors M8, with fixed stop, plastic (PA12), glass-fiber reinforced, mounting hardware included	BEF-KHF-M08	2051478