SIEMENS

Data sheet 3SE5122-0CF01



SIRIUS POSITION SWITCH METAL ENCLOSURE 56MM WIDE DEVICE CONNECTION 3X (M20X1.5) 1NO/1NC SNAP-ACTION CONTACTS ANGULAR ROL. LEVER, METAL LEVER AND PLASTIC ROLLER 22MM

Product designation	standard position switch
Manufacturer's article number	
• of the supplied basic switch	3SE5122-0CA00
• of the supplied actuator head for position switches	3SE5000-0AF01
• of the supplied switching contacts	3SE5000-0CA00
• of the supplied empty enclosure with cover	3SE5122-0AA00

General technical data:	
Product function	
• positive opening	Yes
Insulation voltage	
• rated value	400 V
Surge voltage resistance rated value	6 kV
Protection class IP	IP66/IP67
Degree of pollution	class 3
Shock resistance	
• acc. to IEC 60068-2-27	30 g / 11 ms
Vibration resistance	
• acc. to IEC 60068-2-6	0.35 mm/5g

Changes preserved
© Copyright Siemens AG

Mechanical service life (switching cycles)	
• typical	15 000 000
Electrical endurance (switching cycles)	
• at AC-15 at 230 V typical	100 000
Electrical endurance (switching cycles) with contactor 3RH11, 3RT1016, 3RT1017, 3RT1024, 3RT1025, 3RT1026 typical	10 000 000
Electrical operating cycles in one hour with contactor 3RH11, 3RT1016, 3RT1017, 3RT1024, 3RT1025, 3RT1026	6 000
Thermal current	6 A
Equipment marking	
• acc. to DIN EN 61346-2	B
• acc. to DIN EN 81346-2	B
Continuous current of the C characteristic MCB	1 A; for a short-circuit current smaller than 400 A
Continuous current of the quick DIAZED fuse link	10 A; for a short-circuit current smaller than 400 A
Continuous current of the DIAZED fuse link gG	6 A
Active principle	mechanical
Repeat accuracy	0.05 mm
Minimum actuating force in activation direction	10 N
Operating current at AC-15	
• at 24 V rated value	6 A
• at 125 V rated value	6 A
• at 230 V rated value	6 A
• at 400 V rated value	4 A
Operating current at DC-13	
• at 24 V rated value	3 A
• at 125 V rated value	0.55 A
• at 230 V rated value	0.27 A
• at 400 V rated value	0.1 A

Enclosure:

Design of the housing	block, wide
Material of the enclosure	metal
Coating of the enclosure	cathodic immersion coating
Design of the housing acc. to standard	No

Drive Head:

Standard-compliant actuator head	EN 50041
Shape of the switch head	roller
Design of the switching function	positive opening

Connections/ Terminals:

Type of electrical connection	screw-type terminals

Mechanical data:

Changes preserved
© Copyright Siemens AG

Cable entry type	3 x (M20 x 1.5)

Communication/ Protocol:

Design of the interface	without

Ambient conditions:

Ambient temperature	
• during operation	-25 ... +85 °C
• during storage	-40 ... +90 °C

Installation/ mounting/ dimensions:

Mounting position	any
Mounting type	screw fixing

Certificates/approvals

General Product Approval				Functional Safety/Safety of Machinery	Declaration of Conformity
CCC	CSA	UL	EAC	Baumusterprüfbescheinigung	EG-Konf.

Test Certificates	other
spezielle Prüfbescheinigungen	Bestätigungen

Further information

Information- and Downloadcenter (Catalogs, Brochures,…)
http://www.siemens.com/industrial-controls/catalogs

Industry Mall (Online ordering system)
https://mall.industry.siemens.com/mall/en/en/Catalog/product?mlfb=3SE51220CF01

Cax online generator
http://support.automation.siemens.com/WW/CAXorder/default.aspx?lang=en&mlfb=3SE51220CF01

Service&Support (Manuals, Certificates, Characteristics, FAQs,...)
https://support.industry.siemens.com/cs/ww/en/ps/3SE51220CF01

Image database (product images, 2D dimension drawings, 3D models, device circuit diagrams, EPLAN macros, ...)
http://www.automation.siemens.com/bilddb/cax_de.aspx?mlfb=3SE51220CF01&lang=en

Changes preserved
© Copyright Siemens AG

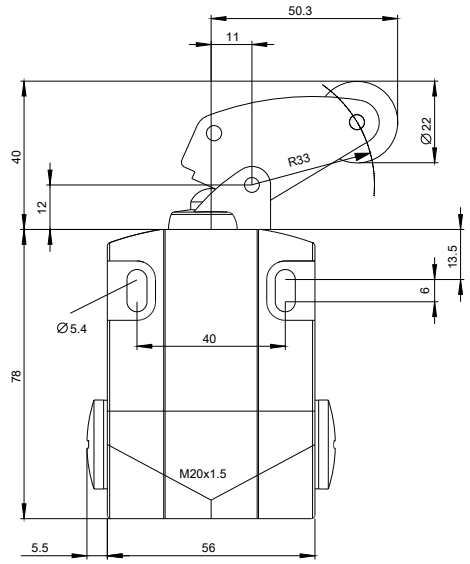

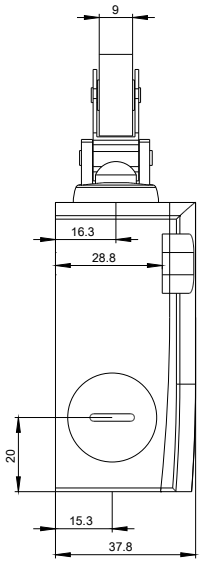

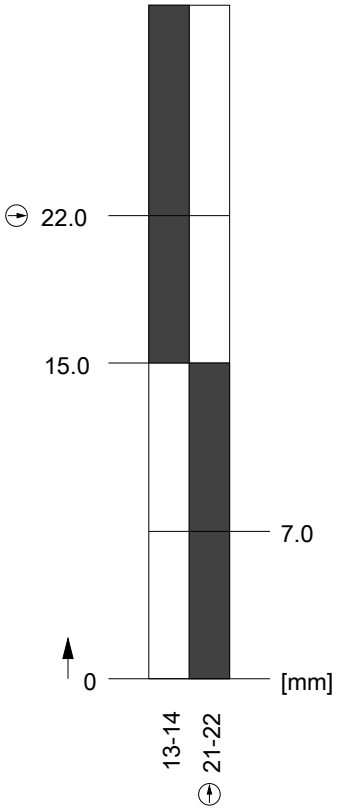

last modified: 11.03.2016

Changes preserved
© Copyright Siemens AG