SIEMENS

Data sheet 3SE5132-0CJ82

SIRIUS POSITION SWITCH PLASTIC ENCLOSURE 40MM ACC. TO EN50041 DEVICE CONNECTION 1X (M20X1.5) 1NO/1NC SNAP-ACTION CONTACTS ROTARY ACTUATOR RIGHT/LEFT ADJUSTABLE, ROD LEVER PLASTIC 200MM LONG



Product designation	standard position switch
Manufacturer's article number	
• of the supplied basic switch	3SE5132-0CA00
• of the supplied actuator head for position switches	3SE5000-0AJ00
• of the supplied operating lever	3SE5000-0AA82
• of the supplied switching contacts	3SE5000-0CA00
• of the supplied empty enclosure with cover	3SE5132-0AA00

General technical data:	
Product function	
• positive opening	No
Insulation voltage	
• rated value	400 V
Surge voltage resistance rated value	6 kV
Protection class IP	IP65/IP67
Degree of pollution	class 3
Shock resistance	
• acc. to IEC 60068-2-27	30 g / 11 ms
Vibration resistance	

Changes preserved
© Copyright Siemens AG

• acc. to IEC 60068-2-6	0.35 mm/5g
Mechanical service life (switching cycles)	
• typical	5 000 000
Electrical endurance (switching cycles)	
• at AC-15 at 230 V typical	100 000
Electrical endurance (switching cycles) with contactor 3RH11, 3RT1016, 3RT1017, 3RT1024, 3RT1025, 3RT1026 typical	5 000 000
Electrical operating cycles in one hour with contactor 3RH11, 3RT1016, 3RT1017, 3RT1024, 3RT1025, 3RT1026	6 000
Thermal current	10 A
Equipment marking	
• acc. to DIN EN 61346-2	B
• acc. to DIN EN 81346-2	B
Continuous current of the C characteristic MCB	1 A; for a short-circuit current smaller than 400 A
Continuous current of the quick DIAZED fuse link	10 A; for a short-circuit current smaller than 400 A
Continuous current of the DIAZED fuse link gG	6 A
Active principle	mechanical
Repeat accuracy	0.05 mm
Minimum actuating torque in activation direction	0.25 N·m
Operating current at AC-15	
• at 24 V rated value	6 A
• at 125 V rated value	6 A
• at 230 V rated value	6 A
• at 400 V rated value	4 A
Operating current at DC-13	
• at 24 V rated value	3 A
• at 125 V rated value	0.55 A
• at 230 V rated value	0.27 A
• at 400 V rated value	0.1 A

Enclosure:

Design of the housing	block, narrow
Material of the enclosure	plastic
Coating of the enclosure	Other types
Design of the housing acc. to standard	Yes

Drive Head:

Standard-compliant actuator head	EN 50041, design D
Shape of the switch head	roller

Connections/ Terminals:

Type of electrical connection	screw-type terminals

Mechanical data:

Changes preserved
© Copyright Siemens AG

Cable entry type	1x (M20 x 1.5)

Communication/ Protocol:

Design of the interface	without

Ambient conditions:

Ambient temperature	
• during operation	-25 ... +85 °C
• during storage	-40 ... +90 °C

Installation/ mounting/ dimensions:

Mounting position	any
Mounting type	screw fixing

Certificates/approvals

General Product Approval			Functional Safety/Safety of Machinery	Declaration of Conformity	other
CCC	CSA	EAC	Baumusterprüfbescheinigung	EG-Konf.	Bestätigungen

Further information

Information- and Downloadcenter (Catalogs, Brochures,…)
http://www.siemens.com/industrial-controls/catalogs

Industry Mall (Online ordering system)
https://mall.industry.siemens.com/mall/en/en/Catalog/product?mlfb=3SE51320CJ82

Cax online generator
http://support.automation.siemens.com/WW/CAXorder/default.aspx?lang=en&mlfb=3SE51320CJ82

Service&Support (Manuals, Certificates, Characteristics, FAQs,...)
https://support.industry.siemens.com/cs/ww/en/ps/3SE51320CJ82

Image database (product images, 2D dimension drawings, 3D models, device circuit diagrams, EPLAN macros, ...)
http://www.automation.siemens.com/bilddb/cax_de.aspx?mlfb=3SE51320CJ82&lang=en

Changes preserved
© Copyright Siemens AG

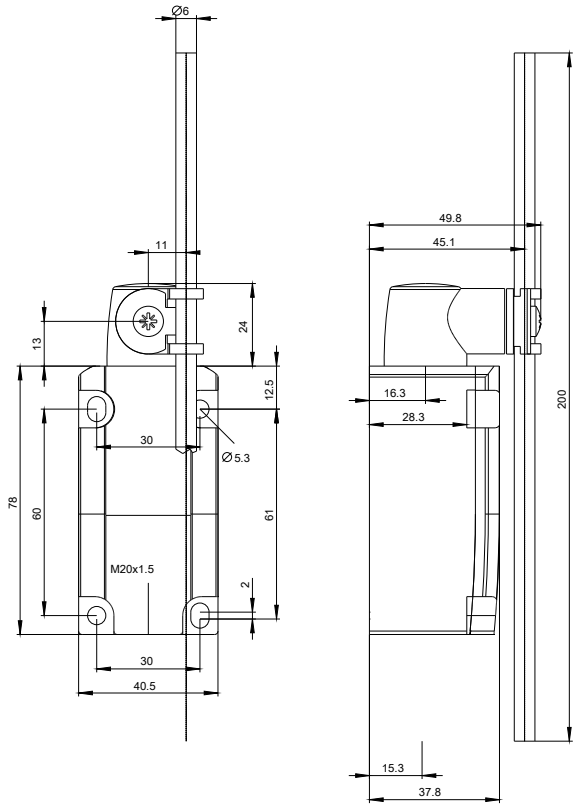

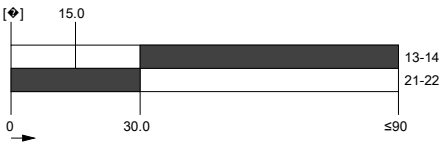

last modified: 11.03.2016

Changes preserved
© Copyright Siemens AG