SIEMENS

Data sheet 3SK1213-1AB40

SIRIUS SAFETY RELAY OUTPUT EXTENSION 3RO POWER, WITH RELAY ENABLING CIRCUITS 3 NO CONTACTS + RELAY FEEDBACK CIRCUIT 1 NC CONTACT US = 24 V DC SCREW CONNECTION



Figure similar

General technical data:	
product brand name	SIRIUS
Design of the product	Expansion unit
Protection class IP of the enclosure	IP20
Protection against electrical shock	finger-safe
Insulation voltage rated value	300 V
Ambient temperature	
• during storage	-40 ... +80 °C
• during operation	-25 ... +60 °C
Air pressure acc. to SN 31205	90 ... 106 kPa
Relative humidity during operation	10 ... 95 %
Installation altitude at height above sea level maximum	2 000 m
Vibration resistance acc. to IEC 60068-2-6	5 ... 500 Hz: 0,75 mm
Shock resistance	5 g / 10 ms
Surge voltage resistance rated value	4 000 V
EMC emitted interference	IEC 60947-5-1, IEC 61000
Installation environment regarding EMC	This product is suitable for Class B environments and can also be used in domestic environments.

Changes preserved
© Copyright Siemens AG

Degree of pollution	3
Equipment marking acc. to DIN EN 61346-2	F
Safety Integrity Level (SIL) acc. to IEC 61508	SIL3
Performance level (PL) acc. to EN ISO 13849-1	e
Category acc. to EN ISO 13849-1	4
PFHD with high demand rate acc. to EN 62061	0.000000001 1/h
PFDavg with low demand rate acc. to IEC 61508	0.000001
T1 value for proof test interval or service life acc. to IEC 61508	20 y
Hardware fault tolerance acc. to IEC 61508	1
Safety device type acc. to IEC 61508-2	Type A
Number of outputs as contact-affected switching element	
• as NC contact	
— for signaling function instantaneous contact	0
— for signaling function delayed switching	0
— safety-related instantaneous contact	0
— safety-related delayed switching	0
• as NO contact	
— for signaling function instantaneous contact	0
— for signaling function delayed switching	0
— safety-related instantaneous contact	3
— safety-related delayed switching	0
Stop category acc. to DIN EN 60204-1	0

General technical data:	
Type of electrical connection Plug-in socket	No
Operating frequency maximum	360 1/h
Switching capacity current of the NO contacts of the relay outputs	
• at DC-13	
— at 24 V	6 A
— at 115 V	1.1 A
— at 230 V	0.55 A
• at AC-15	
— at 24 V	10 A
— at 115 V	10 A
— at 230 V	10 A
Thermal current of the switching element with contacts maximum	10 A
Operating current at 17 V minimum	5 mA
Mechanical service life (switching cycles) typical	10 000 000

Changes preserved
© Copyright Siemens AG

maximum permissible voltage for safe isolation between electronic evaluation device and enabling circuit acc. to EN 60947-1	300 V
Design of the fuse link for short-circuit protection of the NO contacts of the relay outputs required	gL/gG: 16 A or MCB type A: 6 A or MCB type B: 4 A or MCB type C: 4 A
Make time with automatic start	
• typical	50 ms
• at DC maximum	70 ms
Make time with automatic start after power failure	
• typical	50 ms
• maximum	70 ms
Backslide delay time in the event of power failure	
• typical	20 ms
• maximum	20 ms
Recovery time after power failure typical	0 s

Control circuit/ Control:	
Type of voltage of the control supply voltage	DC
Control supply voltage	
• at DC	
— rated value	24 V
Operating range factor control supply voltage rated value of magnet coil	
• at DC	0.8 ... 1.2
Power loss [W] typical	5.5 W

Installation/ mounting/ dimensions:	
Mounting position	on horizontal standard mounting rail
Required spacing for grounded parts at the side	5 mm
Required spacing with side-by-side mounting at the side	0 mm
Mounting type	screw and snap-on mounting
Width	90 mm
Height	100 mm
Depth	121.6 mm

Connections/ Terminals:	
Type of electrical connection	screw-type terminals
Type of connectable conductor cross-sections	
• solid	1x (0.5 ... 4.0 mm²), 2x (0.5 ... 2.5 mm²)
• finely stranded	
— with core end processing	1x (0.5 ... 2.5 mm²), 2x (0.5 ... 1.5 mm²)
Type of connectable conductor cross-sections at AWG conductors	
• solid	1x (20 ... 12), 2x (20 ... 14)

Changes preserved
© Copyright Siemens AG

Product Function:	
Product function parameterizable	undelayed/delayed (only with system connector)
Suitability for operation Device connector 3ZY12	Yes
Suitability for use	
• safety-related circuits	Yes

Certificates/approvals	
Certificate of suitability	
• TÜV (German technical inspectorate) certificate	Yes
• UL approval	Yes

General Product Approval			EMC	Functional Safety/Safety of Machinery	Declaration of Conformity
CCC	CSA	UL	C-TICK	Baumusterbescheinigung	EG-Konf.

Test Certificates	Shipping Approval	other	Railway
Typprüfbescheinigung/Werkszeugnis	LRS	Bestätigungen	Bestätigungen

Further information

Information- and Downloadcenter (Catalogs, Brochures,…)
http://www.siemens.com/industrial-controls/catalogs

Industry Mall (Online ordering system)
https://mall.industry.siemens.com/mall/en/en/Catalog/product?mlfb=3SK12131AB40

Cax online generator
http://support.automation.siemens.com/WW/CAXorder/default.aspx?lang=en&mlfb=3SK12131AB40

Service&Support (Manuals, Certificates, Characteristics, FAQs,...)
https://support.industry.siemens.com/cs/ww/en/ps/3SK12131AB40

Image database (product images, 2D dimension drawings, 3D models, device circuit diagrams, EPLAN macros, ...)
http://www.automation.siemens.com/bilddb/cax_de.aspx?mlfb=3SK12131AB40&lang=en

Changes preserved
© Copyright Siemens AG

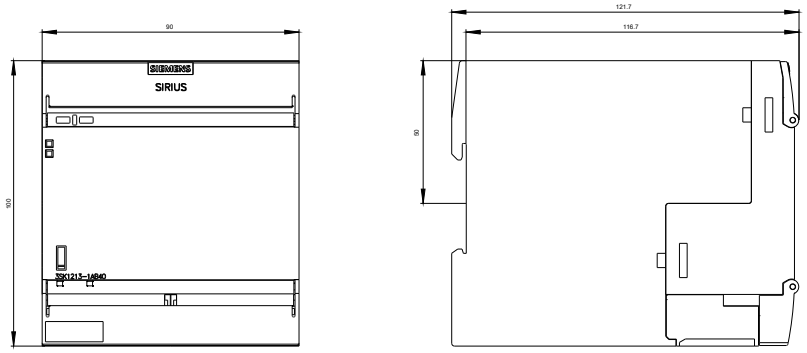

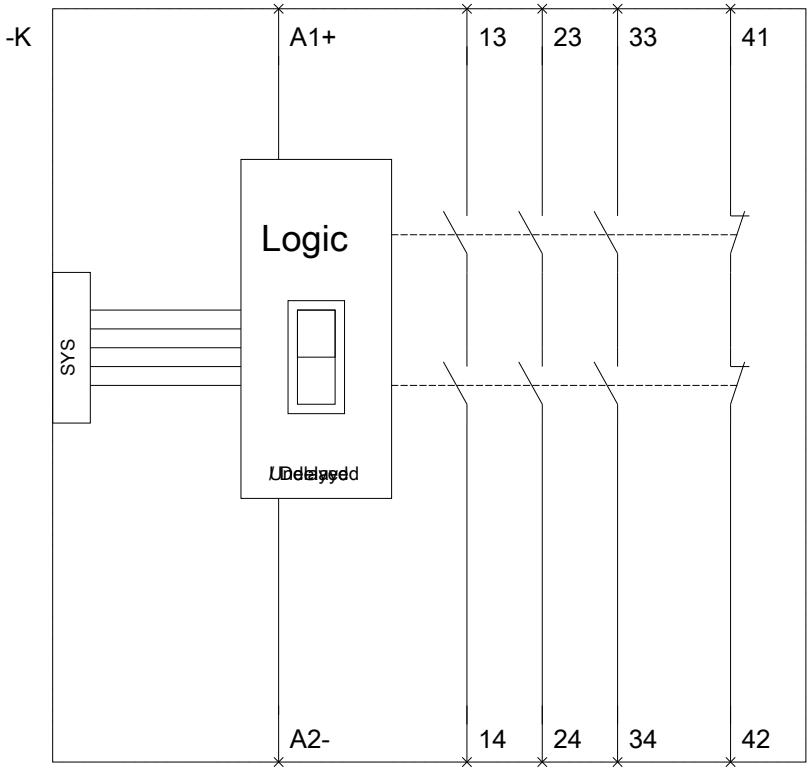

Changes preserved
© Copyright Siemens AG

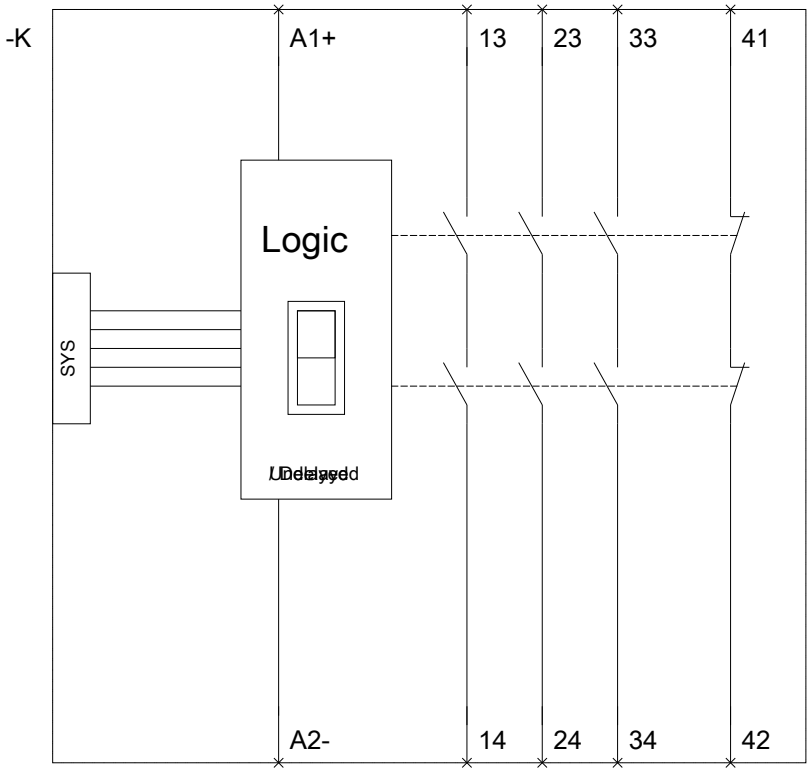

last modified: 10.03.2016

Changes preserved
© Copyright Siemens AG