SIEMENS

Data sheet for SINAMICS G110

Ordering data

6SL3211-0AB11-2BB1



Figure similar

Client order no. :
Order no. :
Offer no. :
Remarks :

Item no. :
Consignment no. :
Project :

Rated data

Input

Number of phases	1 AC
Line voltage	200 ... 240 V ±10 %
Line frequency	47 ... 63 Hz
Rated current	2.30 A

Output

Number of phases	3 AC
Rated power	0.12 kW
Rated current (IN)	0.90 A
Pulse frequency	8 kHz
Output frequency for V/f control	0 ... 650 Hz

As a result of legal stipulations, a limit to 550 Hz is in production

General tech. specifications

Offset factor cos φ	0.95

Communication

Communication	RS485

Mechanical data

Degree of protection	IP20
Size	FSA
Net weight	0.80 kg
Width	90.0 mm
Height	150.0 mm
Depth	116.0 mm

Ambient conditions

Installation altitude	1000 m

Ambient temperature

Operation	-10 ... 40 °C
Storage	-40 ... 70 °C

Relative humidity

Max. operation	95 % Condensation not permissible

Closed-loop control techniques

V/f linear / square-law / parameterizable	Yes

Standards

Compliance with standards	UL, cUL, CE, C-Tick (RCM)
CE marking	Low-voltage directive 2006/95/EC

Inputs/ outputs

Digital inputs

Number	3

Digital outputs

Number	1 (Isolated optocoupler output, NPN type)

Maßzeichnungen

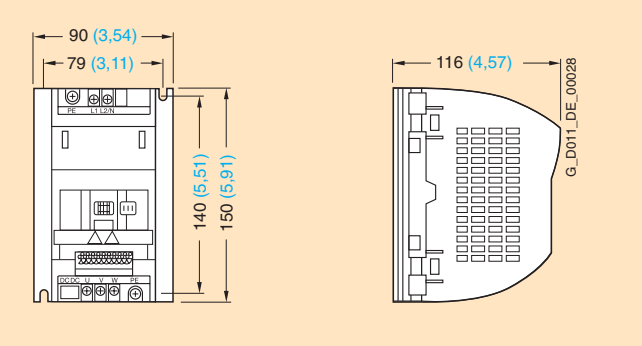

Umrichter FS A; 0,12 kW bis 0,37 kW

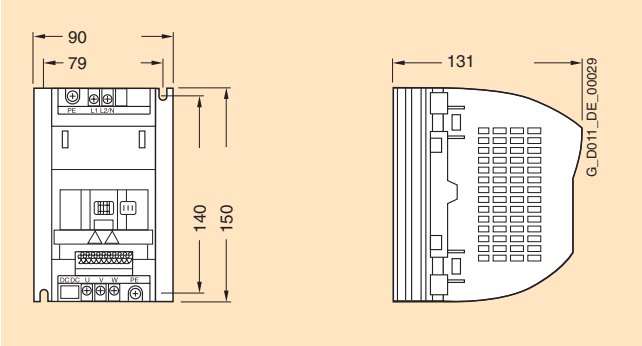

Umrichter FS A; 0,55 kW bis 0,75 kW

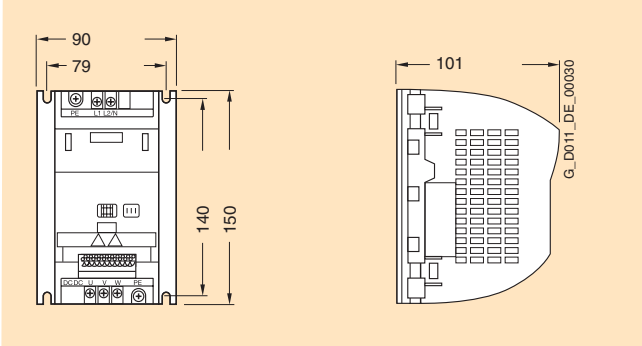

Umrichter FS A mit flachem Kühlkörper; 0,12 kW bis 0,75 kW

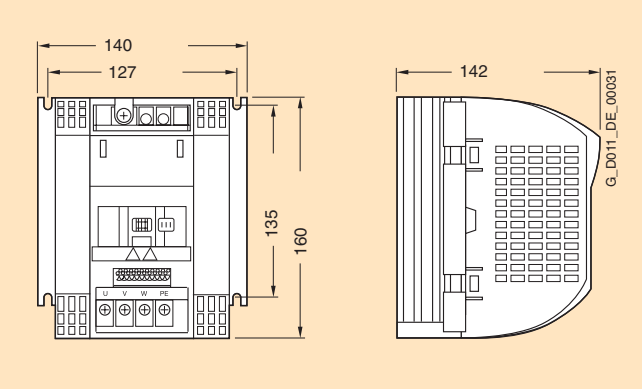

Umrichter FS B; 1,1 kW und 1,5 kW

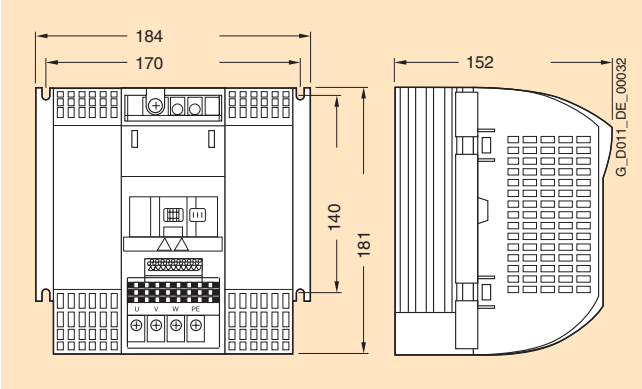

Umrichter FS C; 2,2 kW und 3,0 kW

Mit aufgestecktem Bedienfeld BOP erhöht sich die Einbautiefe jeweils um 8 mm (0,31 Inches).

Alle Maße in mm (Klammerwerte in Inches).