SIEMENS

Data sheet 3RT2026-1NF30

CONTACTOR, AC-3, 11KW/400V, 1NO+1NC, AC(50-60HZ)/DC ACTUAT. AC/DC 95...130V, 3-POLE, SZ S0 SCREW TERMINAL



product brand name	SIRIUS
Product designation	3RT2 contactor

General technical data:	
Size of contactor	S0
Product extension	
• function module for communication	No
• Auxiliary switch	Yes
Insulation voltage	
• rated value	690 V
Degree of pollution	3
Surge voltage resistance rated value	6 kV
maximum permissible voltage for safe isolation	
• between coil and main contacts acc. to EN 60947-1	400 V
Protection class IP	
• on the front	IP20
• of the terminal	IP20
Shock resistance	
• at rectangular impulse	

Changes preserved
© Copyright Siemens AG

— at AC	8,3g / 5 ms, 5,3g / 10 ms
— at DC	10g / 5 ms, 7,5g / 10 ms
• with sine pulse	
— at AC	13,5g / 5 ms, 8,3g / 10 ms
— at DC	15g / 5 ms, 10g / 10 ms
Mechanical service life (switching cycles)	
• of contactor typical	10 000 000
• of the contactor with added electronics-compatible auxiliary switch block typical	5 000 000
• of the contactor with added auxiliary switch block typical	10 000 000
Ambient conditions:	
Installation altitude at height above sea level maximum	2 000 m
Ambient temperature	
• during operation	-25 ... +60 °C
• during storage	-55 ... +80 °C
Main circuit:	
Number of NO contacts for main contacts	3
Number of NC contacts for main contacts	0
Operating voltage	
• at AC-3 rated value maximum	690 V
Operating current	
• at AC-1 at 400 V	
— at ambient temperature 40 °C rated value	40 A
• at AC-1 up to 690 V	
— at ambient temperature 40 °C rated value	40 A
— at ambient temperature 60 °C rated value	35 A
• at AC-2 at 400 V rated value	25 A
• at AC-3	
— at 400 V rated value	25 A
— at 500 V rated value	18 A
— at 690 V rated value	13 A
Connectable conductor cross-section in main circuit at AC-1	
• at 60 °C minimum permissible	10 mm²
• at 40 °C minimum permissible	10 mm²
Operating current for approx. 200000 operating cycles at AC-4	
• at 400 V rated value	9 A
• at 690 V rated value	9 A
Operating current	

Changes preserved
© Copyright Siemens AG

• at 1 current path at DC-1	
— at 24 V rated value	35 A
— at 110 V rated value	4.5 A
— at 220 V rated value	1 A
— at 440 V rated value	0.4 A
— at 600 V rated value	0.25 A
• with 2 current paths in series at DC-1	
— at 24 V rated value	35 A
— at 110 V rated value	35 A
— at 220 V rated value	5 A
— at 440 V rated value	1 A
— at 600 V rated value	0.8 A
• with 3 current paths in series at DC-1	
— at 24 V rated value	35 A
— at 110 V rated value	35 A
— at 220 V rated value	35 A
— at 440 V rated value	2.9 A
— at 600 V rated value	1.4 A
Operating current	
• at 1 current path at DC-3 at DC-5	
— at 24 V rated value	20 A
— at 110 V rated value	2.5 A
— at 220 V rated value	1 A
— at 440 V rated value	0.09 A
— at 600 V rated value	0.06 A
• with 2 current paths in series at DC-3 at DC-5	
— at 110 V rated value	15 A
— at 220 V rated value	3 A
— at 24 V rated value	35 A
— at 440 V rated value	0.27 A
— at 600 V rated value	0.16 A
• with 3 current paths in series at DC-3 at DC-5	
— at 110 V rated value	35 A
— at 220 V rated value	10 A
— at 24 V rated value	35 A
— at 440 V rated value	0.6 A
— at 600 V rated value	0.6 A
Operating power	
• at AC-1	
— at 230 V rated value	13.3 kW
— at 230 V at 60 °C rated value	13.3 kW

Changes preserved
© Copyright Siemens AG

— at 400 V rated value	23 kW
— at 400 V at 60 °C rated value	23 kW
— at 690 V rated value	40 kW
— at 690 V at 60 °C rated value	40 kW
• at AC-2 at 400 V rated value	11 kW
• at AC-3	
— at 230 V rated value	5.5 kW
— at 400 V rated value	11 kW
— at 690 V rated value	11 kW
Operating power for approx. 200000 operating cycles at AC-4	
• at 400 V rated value	4.4 kW
• at 690 V rated value	7.7 kW
Thermal short-time current limited to 10 s	200 A
Power loss [W] at AC-3 at 400 V for rated value of the operating current per conductor	1.6 W
No-load switching frequency	
• at AC	5 000 1/h
• at DC	1 500 1/h
Operating frequency	
• at AC-1 maximum	1 000 1/h
• at AC-2 maximum	750 1/h
• at AC-3 maximum	750 1/h
• at AC-4 maximum	250 1/h

Control circuit/ Control:	
Type of voltage of the control supply voltage	AC/DC
Control supply voltage at AC	
• at 50 Hz rated value	110 V
• at 50 Hz rated value	95 ... 130 V
• at 60 Hz rated value	110 V
• at 60 Hz rated value	95 ... 130 V
Control supply voltage at DC	
• rated value	95 ... 130 V
Operating range factor control supply voltage rated value of magnet coil at AC	
• at 50 Hz	0.7 ... 1.3
• at 60 Hz	0.7 ... 1.3
Operating range factor control supply voltage rated value of magnet coil at DC	0.7 ... 1.3
Design of the surge suppressor	with varistor
Apparent pick-up power of magnet coil at AC	
• at 50 Hz	11.9 V·A

Changes preserved
© Copyright Siemens AG

• at 60 Hz	12 V·A
Inductive power factor with closing power of the coil	
• at 50 Hz	0.98
• at 60 Hz	0.98
Apparent holding power of magnet coil at AC	
• at 50 Hz	1.6 V·A
• at 60 Hz	1.8 V·A
Inductive power factor with the holding power of the coil	
• at 50 Hz	0.79
• at 60 Hz	0.74
Closing power of magnet coil at DC	10.2 W
Holding power of magnet coil at DC	1.3 W
Closing delay	
• at AC	50 ... 70 ms
• at DC	50 ... 70 ms
Opening delay	
• at AC	35 ... 45 ms
• at DC	35 ... 45 ms
Arcing time	10 ... 10 ms
Residual current of the electronics for control with signal <0>	
• at AC at 230 V maximum permissible	7 mA
• at DC at 24 V maximum permissible	16 mA
Auxiliary circuit:	
Number of NC contacts	
• for auxiliary contacts	
— instantaneous contact	1
Number of NO contacts	
• for auxiliary contacts	
— instantaneous contact	1
Operating current at AC-12 maximum	10 A
Operating current at AC-15	
• at 230 V rated value	10 A
• at 400 V rated value	3 A
• at 500 V rated value	2 A
• at 690 V rated value	1 A
Operating current at DC-12	
• at 24 V rated value	10 A
• at 48 V rated value	6 A
• at 60 V rated value	6 A
• at 110 V rated value	3 A

Changes preserved
© Copyright Siemens AG

• at 125 V rated value	2 A
• at 220 V rated value	1 A
• at 600 V rated value	0.15 A
Operating current at DC-13	
• at 24 V rated value	10 A
• at 48 V rated value	2 A
• at 60 V rated value	2 A
• at 110 V rated value	1 A
• at 125 V rated value	0.9 A
• at 220 V rated value	0.3 A
• at 600 V rated value	0.1 A
Contact reliability of auxiliary contacts	1 faulty switching per 100 million (17 V, 1 mA)

UL/CSA ratings:

Full-load current (FLA) for three-phase AC motor	
• at 480 V rated value	21 A
• at 600 V rated value	22 A
Yielded mechanical performance [hp]	
• for single-phase AC motor	
— at 110/120 V rated value	2 hp
— at 230 V rated value	3 hp
• for three-phase AC motor	
— at 200/208 V rated value	5 hp
— at 220/230 V rated value	7.5 hp
— at 460/480 V rated value	15 hp
— at 575/600 V rated value	20 hp
Contact rating of auxiliary contacts according to UL	A600 / Q600

Short-circuit protection

Design of the fuse link	
• for short-circuit protection of the main circuit	
— with type of coordination 1 required	gL/gG LV HRC 3NA, DIAZED 5SB, NEOZED 5SE: 100 A
— with type of assignment 2 required	gL/gG LV HRC 3NA, DIAZED 5SB, NEOZED 5SE: 35 A
• for short-circuit protection of the auxiliary switch required	fuse gL/gG: 10 A

Installation/ mounting/ dimensions:

Mounting position	+/-180° rotation possible on vertical mounting surface; can be tilted forward and backward by +/- 22.5° on vertical mounting surface
Mounting type	screw and snap-on mounting onto 35 mm standard mounting rail according to DIN EN 50022
• Side-by-side mounting	Yes
Height	85 mm

Changes preserved
© Copyright Siemens AG

Width	45 mm
Depth	107 mm
Required spacing	
• with side-by-side mounting	
— forwards	0 mm
— Backwards	0 mm
— upwards	0 mm
— downwards	0 mm
— at the side	0 mm
• for grounded parts	
— forwards	0 mm
— Backwards	0 mm
— upwards	0 mm
— at the side	6 mm
— downwards	0 mm
• for live parts	
— forwards	0 mm
— Backwards	0 mm
— upwards	0 mm
— downwards	0 mm
— at the side	6 mm

Connections/ Terminals:

Type of electrical connection	
• for main current circuit	screw-type terminals
• for auxiliary and control current circuit	screw-type terminals
Type of connectable conductor cross-sections	
• for main contacts	
— solid	2x (1 ... 2.5 mm²), 2x (2.5 ... 10 mm²)
— single or multi-stranded	2x (1 ... 2,5 mm²), 2x (2,5 ... 10 mm²)
— finely stranded with core end processing	2x (1 ... 2.5 mm²), 2x (2.5 ... 6 mm²), 1x 10 mm²
• at AWG conductors for main contacts	2x (16 ... 12), 2x (14 ... 8)
Type of connectable conductor cross-sections	
• for auxiliary contacts	
— single or multi-stranded	2x (0,5 ... 1,5 mm²), 2x (0,75 ... 2,5 mm²)
— finely stranded with core end processing	2x (0.5 ... 1.5 mm²), 2x (0.75 ... 2.5 mm²)
• at AWG conductors for auxiliary contacts	2x (20 ... 16), 2x (18 ... 14)

Safety related data:

B10 value	
• with high demand rate acc. to SN 31920	1 000 000
Proportion of dangerous failures	
• with low demand rate acc. to SN 31920	40 %

Changes preserved
© Copyright Siemens AG

• with high demand rate acc. to SN 31920	73 %
Failure rate [FIT]	
• with low demand rate acc. to SN 31920	100 FIT
Product function	
• Mirror contact acc. to IEC 60947-4-1	Yes
T1 value for proof test interval or service life acc. to IEC 61508	20 y

Certificates/approvals

General Product Approval					EMC
CCC	CSA		UL	KTL	C-TICK

Functional Safety/Safety of Machinery	Declaration of Conformity	Test Certificates			Shipping Approval
Baumusterbescheinigung	EG-Konf.	spezielle Prüfbescheinigungen	Typprüfbescheinigung/Werkszeugnis	sonstig	ABS

Shipping Approval					
BUREAU VERITAS	DNV	GL	LRS	PRS	RINA

Shipping Approval	other			
RMRS	Bestätigungen	Umweltbestätigung	VDE	

Further information

Information- and Downloadcenter (Catalogs, Brochures,…)
http://www.siemens.com/industrial-controls/catalogs

Industry Mall (Online ordering system)
https://mall.industry.siemens.com/mall/en/en/Catalog/product?mlfb=3RT20261NF30

Cax online generator
http://support.automation.siemens.com/WW/CAXorder/default.aspx?lang=en&mlfb=3RT20261NF30

Service&Support (Manuals, Certificates, Characteristics, FAQs,...)
https://support.industry.siemens.com/cs/ww/en/ps/3RT20261NF30

Changes preserved
© Copyright Siemens AG

Image database (product images, 2D dimension drawings, 3D models, device circuit diagrams, EPLAN macros, ...)
http://www.automation.siemens.com/bilddb/cax_de.aspx?mlfb=3RT20261NF30&lang=en

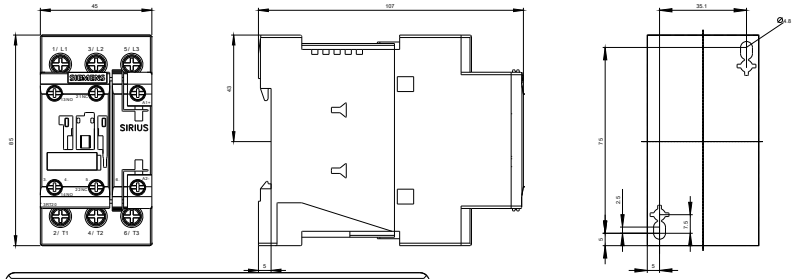

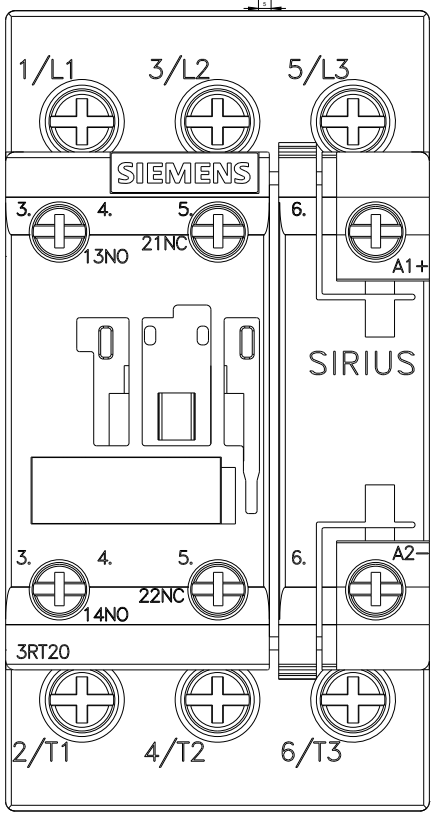

Changes preserved
© Copyright Siemens AG

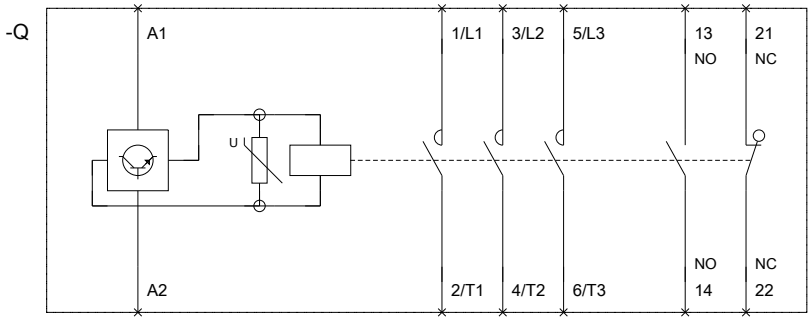

last modified: 05.04.2016

Changes preserved
© Copyright Siemens AG