CWS 250A
Elbow separable cable connector

for all 1-core polymeric cables, for outer cone system terminals type A

Cellplux elbow separable cable connectors CWS are suitable for connecting all polymeric-insulated 1-core cables (PVC, PE, XLPE, EPR), with different types of semi-conductive layers (graphite-coated or strippable) and screen design (wire or tape screen), to switching equipment and transformers having an outer cone system type A, up to maximum network voltage of 24 kV in accordance with EN 50180 and EN 50181.



Characteristics
- With capacitive measuring point
- Individually tested
- Outer semi-conductive layer made of semi-conductive EPDM provides protection from exposed electrical parts
- Cable sheath insulation fault test may be performed while under voltage
- For copper and aluminium conductors
- Quick, safe and easy assembly
- Suitable for a wide range of applications due to integrated screw cable lug

Application/Suitability
- Indoor

Voltage level
- $U_0/U\ (U_m)$ 6/10 (12) kV - 12.7/22 (24) kV

Test standards
- CENELEC HD 629.1 (DIN VDE 0278, part 629-1)

Storage conditions/Shelf life
- Unlimited shelf life

Dimensions

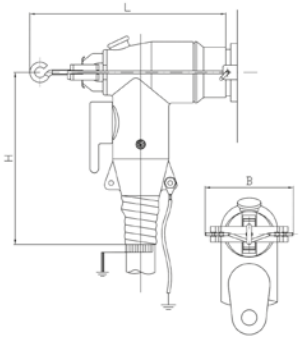

Scope of delivery
Set of 3 separable cable connectors, silicone stress control elements, earthing set, screw cable lug for main conductor, assembly material, assembly instructions

Optional accessory: EGA earthing kit for cables with tape screen (see Connecting technology)

Type		L mm	B mm	H mm	min. Ø over core insulation after removal of the outer conductive layer mm	12 kV Nominal cross section mm²	17.5 kV Nominal cross section mm²	24 kV Nominal cross section mm²	Art.-No.
$U_0/U\ (U_m)$ 6/10 (12) kV - 12.7/22 (24) kV									
CWS 250A 24kV	16-95 M EGA	200	80	178	14.7	50 - 95	25 - 95	16 - 95	295167
	70-150 M EGA	200	80	178	19.9	120 - 150	95 - 150	70 - 150	293792