SIEMENS

Data sheet BVP:203135

BD2-AK2X/S18 TAP-OFF UNIT 63A / 1X 3P.D02

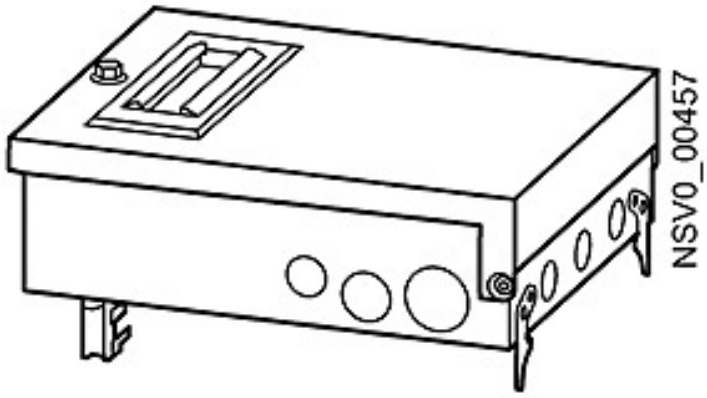

Model		
Product designation		tap-off unit for BD2 busbar trunking system
Protection class		
Protection class IP		IP54
Main circuit		
Operating frequency / rated value		
• minimum	Hz	50
• maximum	Hz	60
Operating voltage / at AC		
• at 50 Hz / rated value / maximum	V	400
• at 60 Hz / rated value / maximum	V	400
Operating current		
• for circuit 1 / at AC / at 50 Hz / rated value / maximum	A	63
• for circuit 1 / at AC / at 60 Hz / rated value / maximum	A	63
Connections		

Changes preserved
© Copyright Siemens AG

Connectable conductor cross-section / in the outgoing unit		
• minimum	mm²	0.5
• maximum	mm²	25

Tap-off points

Outgoing unit version		cable entry
Design of short-circuit and overloading protection / in the outgoing unit		3-pole D02 fuse base
Size of the outgoing feeder		2
Number of poles / of the outgoing feeder		5

Mechanical Design

Height	mm	160
Width	mm	205
Length	mm	320
Number of width units		8
Product component / Locking mechanism		Yes

Declaration of Conformity

CE

EG-Konf.

Further information

Information- and Downloadcenter (Catalogs, Brochures,…)
http://www.siemens.com/lowvoltage/catalogs

Industry Mall (Online ordering system)
https://eb.automation.siemens.com/mall/en/WW/Catalog/Product/BVP:203135

Service&Support (Manuals, Certificates, Characteristics, FAQs,...)
http://support.automation.siemens.com/WW/view/en/BVP:203135/all

Image database (product images, 2D dimension drawings, 3D models, device circuit diagrams, ...)
http://www.automation.siemens.com/bilddb/cax_en.aspx?mlfb=BVP:203135

CAx-Online-Generator
http://www.siemens.com/cax

Tender specifications
http://ausschreibungstexte.siemens.com/tiplv

last modified: 12.04.2016

Changes preserved
© Copyright Siemens AG