Saves Your Energy

PRODUCT CARD

21.06.16

ST149

Twig protector

Code	ST149
GTIN	6418677405433
Name	Twig protector
	For covered conductor
Beschreibung	Used with PAS and BLL conductors as a branch protector to prevent the sliding of the branches along the conductor to the arc protection devices or other bare live-line parts. Made of UV-radiation resistant plastic. Can be installed on a conductor under voltage e.g. with live-line tool CT48.



Technische Spezifikation

Abmessungen

Gewicht:	0.06 kg
umhüllte Leiter:	35 ... 157 mm²
Leiterdurchmesser:	8 ... 23 mm

Klassifizierung

ETIM:

Specification

Construction:

	Component	Material
Construction:	Body	UV-radiation resistant plastic

Markings: ENSTO, ST149, production date

Ensto Finland Oy
Ensio Miettisen katu 2
06100 Porvoo
Finland
email:
phone:
www.ensto.com

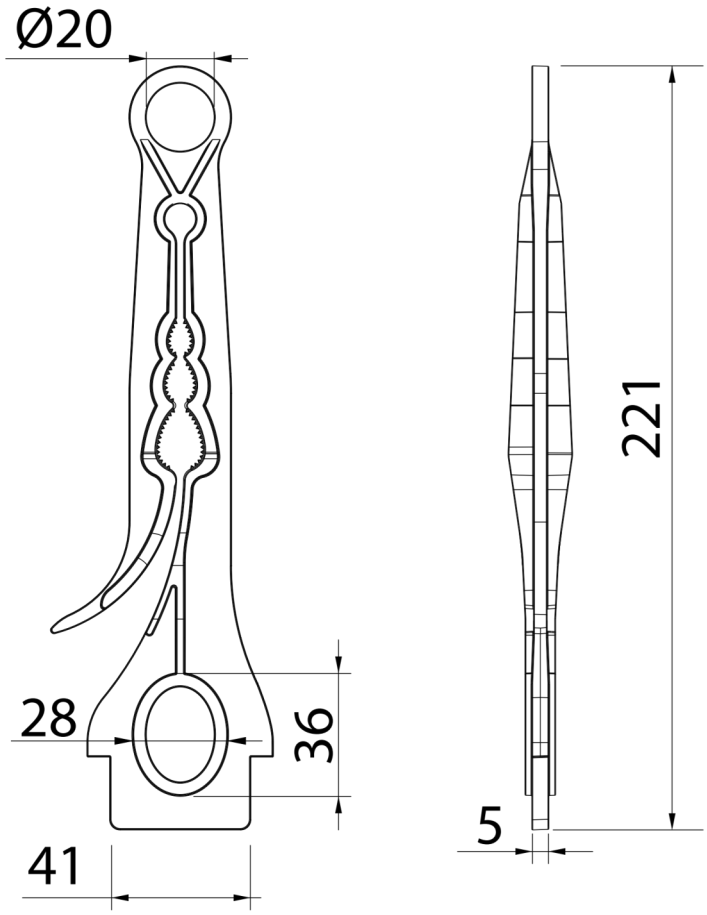

Ensto Finland Oy
Ensio Miettisen katu 2
06100 Porvoo
Finland
email:
phone:
www.ensto.com