Contents

2 - Control stations and enclosures

Selection guide . . . . . *page 2/2*

Plastic control stations

■ XAL D and K control stations
for Harmony® Ø 22 control and signalling units XB5

□ Complete stations (screw clamp terminal connections) . . . . . *page 2/8*
□ Stations for customer assembly: empty enclosures . . . . . *page 2/12*
□ Stations for customer assembly: electrical blocks . . . . . *page 2/13*
□ Stations for customer assembly: heads . . . . . *page 2/14*
□ Stations for customer assembly: accessories . . . . . *page 2/23*

■ XAL G plastic control stations for severe environments . . . . . *page 2/33*

■ XAL E plastic control stations
for Harmony® Ø 22 control and signalling units XB7

□ Complete stations . . . . . *page 2/39*
□ Empty control stations . . . . . *page 2/42*
□ Separate components and accessories . . . . . *page 2/43*

Polyester enclosures

■ XAP A polyester enclosures, undrilled or with cut-outs
for Harmony® Ø 22 control and signalling units . . . . . *page 2/52*

Metal control enclosures

■ Die-cast metal enclosures XAP M and XAP J (aluminium) . . . . . *page 2/53*

■ Sheet-steel enclosures XB2 SL . . . . . *page 2/54*

■ Die-cast metal enclosures XB2 SL (zinc alloy) . . . . . *page 2/54*

■ Flush-mounting enclosures XAP E. . . . . *page 2/54*

Control stations for specific applications

■ XAP S key operated control stations . . . . . *page 2/58*

■ XAL F lift inspection stations . . . . . *page 2/64*

Control stations and enclosures

Type of applications	**All applications**			
Enclosures	**Plastic**			**Glass-reinforced polyester**
	Complete stations and separate components for customer assembly			**Empty insulated enclosures**
				
Main feature	Pre-drilled-control stations			Pre-drilled or undrilled enclosures
Associated control and signalling units	Harmony XB5 with plastic bezel		Harmony XB7, monolithic, plastic	Harmony XB4 with metal bezel Harmony XB5 with plastic bezel
Number of cut-outs for Ø 22 control and signalling units	1, 2, 3, 4 or 5	1, 2 or 3 (complete stations) 1, 2, 3, 4 or 5 (empty enclosures)	1, 2 or 3	1, 2, 4, 8 or 16
Material	Polycarbonate		ABS	Glass-reinforced polyester
Colour	Yellow lid Light grey base	Dark grey lid Light grey base	Light grey or yellow lid Light grey base	Coloured grey throughout
Degree of protection	IP 66		IP 54	IP 65
Function	Emergency Stop	Start or Stop Start-Stop with pilot light Movement control	According to equipment fitted: □ Start or Stop □ Start-Stop with pilot light □ Movement control □ Emergency stop	
Cable entries	Knock-outs			Tapped for cable gland
Type references	**XAL K**	**XAL D**	**XAL E**	**XAP A**
Page(s)	2/9 and 2/12	2/8 and 2/10	2/39	2/52

			Specific applications		
Metal		**Metal front plate, insulated protective rear cover**	**Plastic**		**Metal**
Empty enclosures		**Empty, flush mounting enclosures: front plate + rear cover**	**Control stations for severe environments**	**Lift inspection stations**	**Key operated control stations**
		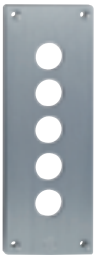	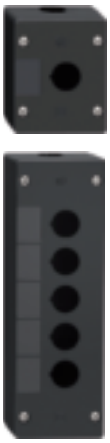		
Pre-drilled enclosures	Pre-drilled or undrilled enclosures	Pre-drilled front plates & rear covers	Pre-drilled empty control stations	Pre-drilled empty enclosures or fitted stations	Fitted stations
Harmony XB4 with metal bezel Harmony XB5 with plastic bezel			Harmony XB5 with plastic bezel	Harmony XB5 or XB7 with plastic bezel	With key lock
8, 16, 24, 30 or 40	1, 2, 3, 4, 6, 8 or 12	1, 2, 3, 4 or 5	1, 2, 3, 4 or 5	1, 2, 3, 4, 5 or 6 with or without power socket	–
Aluminium alloy or sheet steel	Zinc or aluminium alloy	Front plate: brushed aluminium Rear cover:polystyrene	Mineral reinforced polyamide	Polycarbonate	Zinc alloy
Blue lid and base	**XAP M**: Blue lid Blue base **XAP J:** Yellow lid Blue base	Unpainted aluminium	Black lid Black base	Yellow lid Light grey base	Grey
IP 54	IP 65		IP 66 IP 69K	IP 44, IP 55 or IP 66 depending on model	IP 54
According to equipment fitted: □ Start or Stop □ Start-Stop with pilot light □ Movement control □ Emergency stop					Start-Stop
Drilled		Knock-outs	ISO 20	Knock-outs	Tapped for cable gland
XB2 SL	**XAP M, XAP J**	**XAP E**	**XAL G**	**XAL F**	**XAP S**
2/53	2/53	2/54	2/33	2/65	2/59

Control stations and enclosures

Plastic control stations XAL D and XAL K
For Harmony® Ø 22 control and signalling units XB5

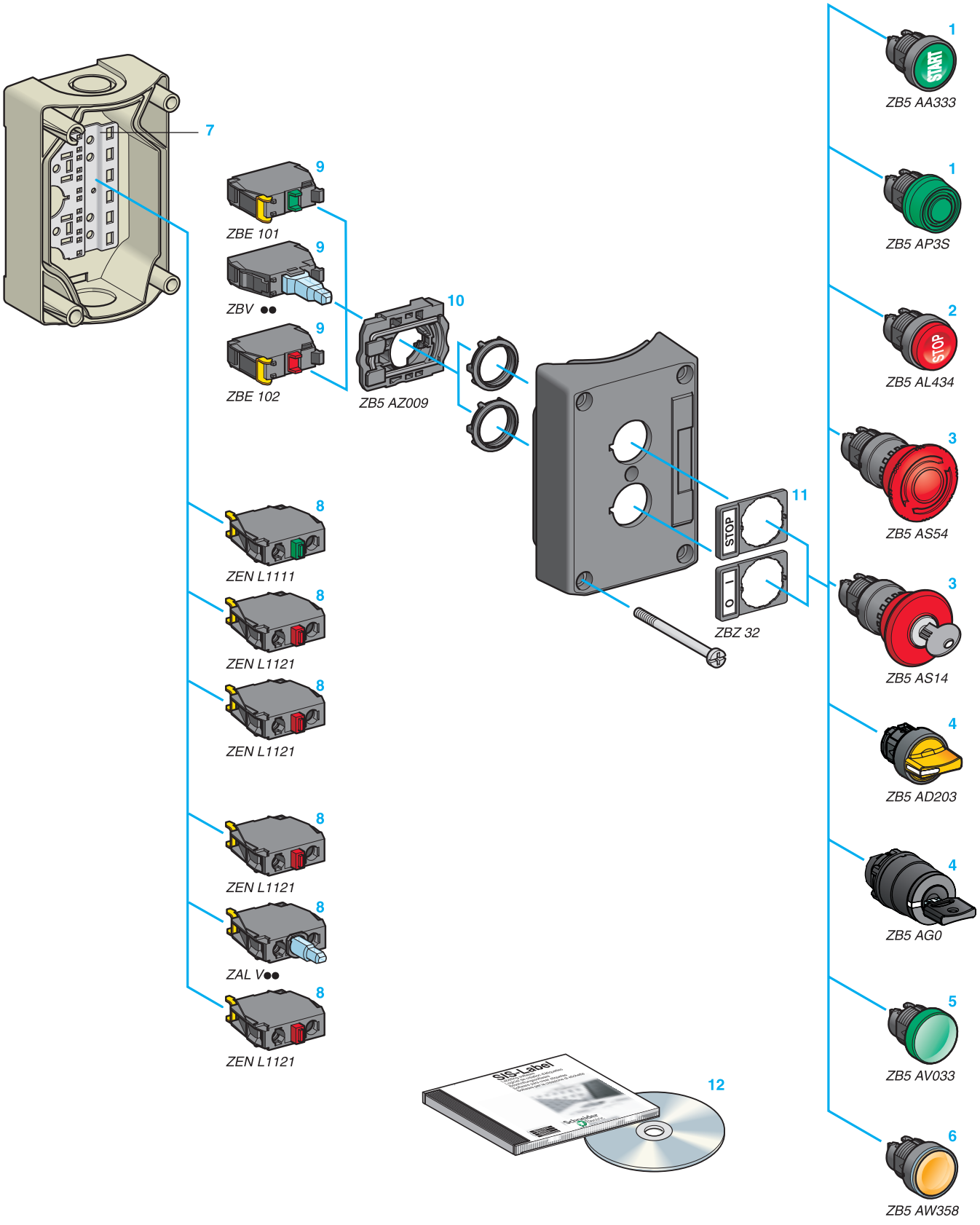

Control stations and enclosures
Plastic control stations XAL D and XAL K
For Harmony® Ø 22 control and signalling units XB5

XAL D and XAL K control stations are available in two forms:
- Complete.
- For customer assembly

These control stations use the plastic bezel pushbuttons, switches and pilot lights of the Harmony XB5 range, which offers a wide choice of circular and square types of head.

Complete stations

Pre-assembled

These are complete, ready to install, stations fitted with 1 to 3 buttons to cater for the most commonly encountered functions:
- **Start or Stop,** with:
  - 1 flush spring return pushbutton,
  - 1 red, spring return, mushroom head pushbutton.
- **Emergency stop or Emergency switching off,** with:
  - 1 red, latching, mushroom head pushbutton 3 (standard or trigger action), either push-pull or turn to release, with or without key.
- **Start-Stop,** with:
  - 2 flush spring return pushbuttons,
  - 1 flush spring return pushbutton 1 + 1 projecting spring return pushbutton 2,
  - 1 2-position selector switch 4 + 1 pilot light with integral red LED, if required.
- **Two functions,** with:
  - 2 flush spring return pushbuttons 1.
- **Three functions,** with:
  - 3 flush spring return pushbuttons 1,
  - 2 flush spring return pushbuttons 1 + 1 projecting spring return pushbutton 2,
  - 2 flush spring return pushbuttons 1 + 1 red, latching, mushroom head pushbutton 3.

These pushbuttons, switches and pilot lights comprise plastic heads from the Harmony XB5 range and electrical blocks (contact or light) 8 that are mounted in the back of the enclosure.

Stations for customer assembly

For customer assembly

These stations are for assembly by the user and offer a choice of 2 assembly methods:
- **Box method**

Identical to the pre-assembled versions. The electrical blocks 8 are mounted on a metal mounting plate in the back of the enclosure 7.
- **Station method**

The electrical blocks 9 are mounted directly beneath the heads using a body/fixing collar 10.

It is possible to assemble stations with 1 to 5 heads, each of which can be combined with 3 electrical blocks 8 or 9 (contact or light).

The XAL range offers a wide choice of head types for:
- Spring return pushbuttons 1 or 2, either marked or unmarked.
- Spring return mushroom head pushbuttons.
- Latching mushroom head pushbuttons 3.
- Selector switches with standard or long handle and key switches 4.
- Toggle switches.
- Pilot lights 5.
- Illuminated spring return pushbuttons 6.
- Illuminated selector switches with standard handle 4.

Accessories

For heads

Markings can be customised by using legend holders 11 which can either be fitted with pre-marked legends or legends engraved by the user. Alternatively, paper legends (protected), prepared using "SIS Label" software 12, or peel-off legends (supplied on sheet for marking by laser printer) can be used.

Characteristics: page 2/6
References: page 2/8
Dimensions: page 2/30

Control stations and enclosures
Control stations XAL D and XAL K
For Harmony® Ø 22 control and signalling units XB5

Environment characteristics

Protective treatment	Standard version		"TH"
Ambient air temperature around the device	For storage	**°C**	- 40…+ 70
	For operation	**°C**	- 25…+ 70 unless otherwise stated
Electric shock protection			Conforming to IEC 61140: class II
Degree of protection			Conforming to IEC 60529: IP 66
			Conforming to NEMA: NEMA type 4X and 13
High pressure cleaning resistance		**Pa**	70 x 10^5 (70 bar); distance: 0.1 m Temperature: 55 °C
Mechanical shock protection	Conforming to EN 50102		With non illuminated heads: IK 03
			With illuminated heads: IK 05
Conformity to standards			EN/IEC 60947-1, EN/IEC 60947-5-1, EN/IEC 60947-5-4, EN/IEC 60947-5-5, EN/IEC 60204-1 and EN/ISO 13850 (trigger action Emergency stops and mechanical latching pushbuttons, see pages 2/9 and 2/16), IEC 60364-5-53 (Emergency switching off mechanical latching pushbuttons, see page 2/39) UL 508, CSA C22-2 n° 14, GB 14048.5
Product certifications	UL Listed, CSA, GOST		Standard single contacts with screw clamp terminals: A600; R300 Light blocks with screw clamp terminals
Terminal referencing			Conforming to EN 50005 and EN 50013
Material and colours			XAL D: polycarbonate, light grey RAL 7035 and dark grey RAL 7016
			XAL K: polycarbonate, light grey RAL 7035 and yellow RAL 1021
Cable entries			Knock-out entries for n° 13 (CM12, Pg 13.5) cable gland and tapped ISO 20

Contact function characteristics

Mechanical characteristics

Contact operation	N/C or N/O		Slow break
Positive operation	Conforming to EN/IEC 60947-5-1 Appendix K		All functions incorporating a N/C contact are positive opening operation
Operating travel (to change electrical state)	Pushbutton	**mm**	Changing N/C state: 1.5 Changing N/O state: 2.6 Total travel: 4.3
Operating force	Pushbutton	**N**	Changing N/C state: 3.5 Changing N/O state: 3.8
	Additional contact only (extra to change state)	**N**	Single N/C contact: 2 Single N/O contact: 2.3
	Emergency stop or Emergency switching off with N/C + N/O	**N**	Standard push-pull: 45 Trigger action push-pull: 50 Standard turn to release (with or without key): 40 Trigger action turn to release (with or without key): 44
Operating torque (to change electrical state)	Selector switches	**N.m**	N/O contact: 0.14
	Additional contact only	**N.m**	N/O contact: 0.05
Mechanical durability (in millions of operating cycles)	Spring return pushbutton		5
	Non illuminated selector switch		1
	Illuminated selector switch		0.5
	Toggle switch		0.5
	Emergency stop or Emergency switching off pushbutton		0.3
Vibration resistance	Conforming to IEC 60068-2-6		Frequency: 12…500 Hz: 5 gn
Shock resistance	Conforming to IEC 60068-2-27		All functions except mushroom head pushbutton, spring return: □ half sine wave acceleration 11 ms: 50 gn □ half sine wave acceleration 18 ms: 30 gn Mushroom head pushbutton, spring return: □ half sine wave acceleration 11 ms: 10 gn

General: page 2/4 References: page 2/8 Dimensions: page 2/30

Contact function characteristics (continued)

Electrical characteristics

Cabling capacity	Conforming to EN/IEC 60947-1	**mm²** **mm²**	Screw clamp terminals Min.: 1 x 0.22 without cable end Max.: 2 x 1.5 with cable end Cross head screws (Pozidriv or Philips type 1), slotted for flat 4 and 5.5 mm screwdriver Tightening torque: 0.8 N.m (1.2 N.m max.)		
Contact material			Silver alloy (Ag/Ni)		
Nominal thermal current	Conforming to EN/IEC 60947-5-1	**A**	Standard blocks with screw clamp terminals: 10		
Short-circuit protection	Conforming to EN/IEC 60947-5-1	**A**	Standard blocks with screw clamp terminals: 10 (gG cartridge fuse conforming to IEC 269-1)		
Rated insulation voltage	Conforming to EN/IEC 60947-1	**V**	Standard blocks with screw clamp terminals: Ui = 600 degree of pollution 3		
Rated impulse withstand voltage	Conforming to EN/IEC 60947-1	**kV**	Standard blocks with screw clamp terminals: Uimp = 6		
Rated operational characteristics Conforming to EN/IEC 60947-5-1	a.c. supply: utilisation category AC-15		A 600: Ue = 600 V and Ie = 1.2 A or Ue = 240 V and Ie = 3 A or Ue = 120 V and Ie = 6 A		
	d.c. supply: utilisation category DC-13		Q 600: Ue = 600 V and Ie = 0.1 A or Ue = 250 V and Ie = 0.27 A or Ue = 125 V and Ie = 0.55 A		
Electrical durability Conforming to EN/IEC 60947-5-1 Appendix C Operating rate: 3600 operating cycles/hour Load factor: 0.5	a.c. supply for 1 million operating cycles: utilisation category AC-15	**V** **A**	24 4	120 3	230 2
	d.c. supply for 1 million operating cycles: utilisation category DC-13	**V** **A**	24 0.5	110 0.2	
Electrical reliability	Failure rate. Conforming to EN/IEC 60947-5-4		At 17 V and 5 mA, $\lambda < 10^{-8}$ At 5 V and 1 mA, $\lambda < 10^{-6}$		

Specific characteristics of light functions with integral LED

Mechanical characteristics

Vibration resistance	Conforming to IEC 60068-2-6		Frequency: 12…500 Hz: 5 gn
Shock resistance	Conforming to IEC 60068-2-27		Half sine wave acceleration 11 ms: 50 gn Half sine wave acceleration 18 ms: 30 gn

Electrical characteristics

Cabling capacity	Conforming to EN/IEC 60947-1	**mm²** **mm²**	Screw clamp terminals Min.: 1 x 0.22 without cable end Max.: 2 x 1.5 with cable end Cross head screws (Pozidriv or Philips type 1), slotted for flat 4 and 5.5 mm screwdriver Tightening torque: 0.8 N.m (1.2 N.m max.)
Rated insulation voltage	Conforming to EN/IEC 60947-1	**V**	Pilot light blocks with integral LED: Ui = 250, degree of pollution 3
Rated impulse withstand voltage	Conforming to EN/IEC 60947-1	**kV**	Pilot light blocks with integral LED: Uimp = 4
Voltage limits	At nominal voltage	**V**	24 V: 19.2…30 ⎓ and 21.6…26.4 ∿ 110…120 V: 40…132 ∿ 240 V: 195…264 ∿
Current consumption	For all colours	**mA**	≂ 12 V supply blocks: 18 ≂ 24 V supply blocks: 18 ∿ 120 V supply blocks: 14 ∿ 240 V supply blocks: 14
Service life	At nominal voltage and at an ambient temperature of 25 °C	**H**	100,000
Surge withstand	Conforming to IEC 61000-4-5	**kV**	1
Resistance to fast transients	Conforming to IEC 61000-4-4	**kV**	2
Resistance to electromagnetic fields	Conforming to IEC 61000-4-3	**V/m**	10
Resistance to electrostatic discharges	Conforming to IEC 61000-4-2	**kV**	8/6
Direct parallel connection across inductive load e.g. contactor coil or solenoid	Maximum power of load	**VA**	For applications involving high powers (≥ 30 VA), a **ZBZ V●** suppressor must be connected across the light block terminals (see page 2/13)
Electromagnetic emission	Conforming to EN 55011		Class B

Control stations and enclosures

Plastic control stations XAL D and XAL K
For Harmony® Ø 22 control and signalling units XB5
Complete stations (screw clamp terminal connections)

Start or Stop function

Light grey “RAL 7035” base, dark grey “RAL 7016” lid, lid fixing screws and nut material: stainless steel type A4, AISI 316.

Description	Type of push	Type of contact N/O	Type of contact N/C	Marking	Reference	Weight kg
Marking on pushbutton						
1 spring return pushbutton	Flush, green	1	–	I	**XAL D102**	0.135
				Marche	**XAL D104**	0.156
				Start	**XAL D103**	0.156
		1	1	I	**XAL D102E**	0.165
	Flush, red	–	1	O	**XAL D112**	0.156
				Arrêt	**XAL D117**	0.156
				Stop	**XAL D114**	0.165
		1	1	O	**XAL D112E**	0.165
				Stop	**XAL D114E**	0.165
	Projecting, red	–	1	O	**XAL D115**	0.157
				Arrêt	**XAL D118**	0.157
				Stop	**XAL D116**	0.157
Marking on legend holder and legend below head						
1 spring return pushbutton	Flush, green	1	–	Marche	**XAL D101**	0.157
				Start	**XAL D101H29**	0.157
	Flush, red	–	1	Arrêt	**XAL D111**	0.157
				Stop	**XAL D111H29**	0.157
1 mushroom head pushbutton, Ø 40 mm, spring return	Red	–	1	Arrêt	**XAL D164**	0.182

815189

XAL D102

815190

XAL D115

815191

XAL D101

815192

XAL D111

815193

XAL D164

General: page 2/4 Characteristics: page 2/6 Dimensions: page 2/30

Control stations and enclosures

Plastic control stations XAL D and XAL K
For Harmony® Ø 22 control and signalling units XB5
Complete stations (screw clamp terminal connections)

Emergency stop or Emergency switching off functions

Light grey “RAL 7035” base, yellow “RAL 1021” lid, lid fixing screws and nut material: stainless steel type A4, AISI 316.

Description	Type	Type of contact N/O	Type of contact N/C	Reference	Weight kg
Unmarked					
1 mushroom head pushbutton, Ø 40 mm, red Turn to release	Trigger action *(1) (2)*	–	1	**XAL K178**	0.194
		–	2	**XAL K178F**	0.194
		1	1	**XAL K178E**	0.194
		1	2	**XAL K178G**	0.194
	Standard *(3)*	–	1	**XAL K174**	0.178
		–	2	**XAL K174F**	0.188
		1	1	**XAL K174E**	0.188
		1	2	**XAL K174G**	0.197
1 mushroom head pushbutton, Ø 40 mm, red Key release (key n° 455)	Trigger action *(1) (2)*	–	1	**XAL K188**	0.188
		–	2	**XAL K188F**	0.188
		1	1	**XAL K188E**	0.188
		1	2	**XAL K188G**	0.188
	Standard *(3)*	–	1	**XAL K184**	0.178
		–	2	**XAL K184F**	0.188
		1	1	**XAL K184E**	0.188
		1	2	**XAL K184G**	0.197
1 mushroom head pushbutton, Ø 40 mm, red Push-pull	Trigger action *(1) (2)*	–	1	**XAL K198**	0.193
	Standard *(3)*	–	1	**XAL K194**	0.183

815196



XAL K178●

815197



XAL K188●

815195



XAL K198

(1) Mushroom head Emergency stop trigger action and mechanical latching pushbuttons conform to standards EN/IEC 60204-1 and EN/ISO 13850, to Machinery Directive 2006/42/EC and to standard EN/IEC 60947-5-5.

*(2) **Your Customer Care Centre may provide a control station type XAL K1●8 with marking of the Emergency stop function and of the logo in conformity with the requests of EN/ISO 13850 standard, paragraph 4.4.6.***

(3) Mushroom head switching off mechanical latching pushbuttons conform to standards IEC 60364-5-53 and EN/IEC 60947-5-5.

Please consult your Customer Care Centre for full details of these standards and directives.

Control stations and enclosures

Plastic control stations XAL D and XAL K
For Harmony® Ø 22 control and signalling units XB5
Complete stations (screw clamp terminal connections)



XAL D224



XAL D211H29



XAL D134



XAL D144



XAL D363B

Start-Stop function

Light grey “RAL 7035” base, dark grey “RAL 7016” lid, lid fixing screws and nut material: stainless steel type A4, AISI 316.

Description	Type of push	Type of contact N/O	Type of contact N/C	Marking	Reference	Weight kg
Marking on pushbutton *(1)*						
2 spring return pushbuttons	1 flush, green 1 flush, red	1 –	– 1	I O	**XAL D213**	0.233
				Marche Arrêt	**XAL D224**	0.233
				Start Stop	**XAL D215**	0.233
		1 1	1 1	I O	**XAL D213E**	0.252
	1 flush, green 1 projecting, red	1 –	– 1	I O	**XAL D214**	0.234
				Start Stop	**XAL D225**	0.234
Marking on legend holder and legend below head						
2 spring return pushbuttons	1 flush, green 1 flush, red	1 –	– 1	Marche Arrêt	**XAL D211**	0.233
				Start Stop	**XAL D211H29**	0.233
	1 flush, green 1 flush, green	1 1	– –	Ouverture Fermeture	**XAL D241**	0.233
1 selector switch 2-position stay put	Standard handle	1	–	O-I	**XAL D134**	0.163
		1	–	Arrêt-Marche	**XAL D132**	0.163
	Key switch (key n° 455) key withdrawal from left-hand position	1	–	O-I	**XAL D144**	0.187
				Arrêt-Marche	**XAL D142**	0.196
		1	1	O-I	**XAL D144E**	0.196

Description	Type of push	Type of contact N/O	Type of contact N/C	Marking	Pilot light supply V	Reference	Weight kg
With pilot light and marking on pushbutton *(1)*							
2 spring return pushbuttons and 1 pilot light with integral red LED Protected LED	1 flush, green 1 flush, red	1 –	– 1	I O	≂ 24	**XAL D363B**	0.261
					~ 120	**XAL D363G**	0.261
					~ 230	**XAL D363M**	0.261
With pilot light and marking on legend holder and legend below head							
2 spring return pushbuttons and 1 pilot light with integral red LED	1 flush, green 1 flush, red	1 –	– 1	Marche Arrêt	≂ 24	**XAL D361B**	0.261
					~ 230	**XAL D361M**	0.261

(1) Push supplied with cap not clipped-in, allowing orientation through 90° in 360° steps.

General: page 2/4 Characteristics: page 2/6 Dimensions: page 2/30

Control stations and enclosures

Plastic control stations XAL D and XAL K
For Harmony® Ø 22 control and signalling units XB5
Complete stations (screw clamp terminal connections)


815206

XAL D222


815209

XAL D339


815208

XAL D334


815207

XAL D321

Two function

Light grey “RAL 7035” base, dark grey “RAL 7016” lid, lid fixing screws and nut material: stainless steel type A4, AISI 316.

Description	Type of push	Type of contact N/O	Type of contact N/C	Marking	Reference	Weight kg
Marking on pushbutton *(1)*						
2 spring return pushbuttons	1 flush, white 1 flush, black	1 1	– –	⇧ ⇩	**XAL D222**	0.233
				→ ⇦	**XAL D223**	0.233
		1 1	1 1	⇧ ⇩	**XAL D222E**	0.233

Three function (light grey “RAL 7035” base, dark grey “RAL 7016” lid)

Description	Type of push	Type of contact N/O	Type of contact N/C	Marking	Reference	Weight kg
Marking on pushbutton *(1)*						
3 spring return pushbuttons	1 flush, green 1 flush, red 1 flush, green	1 – 1	– 1 –	I O II	**XAL D339**	0.298
	1 flush, white 1 flush, red 1 flush, black	1 – 1	– 1 –	⇧ O ⇩	**XAL D324**	0.298
				⇧ Stop ⇩	**XAL D326**	0.298
				→ O ⇦	**XAL D334**	0.298
		1 1 1	1 1 1	⇧ O ⇩	**XAL D324E**	0.317
	1 flush, white 1 flush, red 1 flush, black	1 – 1	– 1 –	⇧ O ⇩	**XAL D325**	0.299
2 spring return pushbuttons + 1 latching mushroom head pushbutton, Ø 30 mm	1 flush, white 1 mushroom head, red *(2)* 1 flush, black	1 – 1	– 1 –	⇧ O ⇩	**XAL D328**	0.317
Marking on legend holder and legend below head						
3 spring return pushbuttons	1 flush, green 1 flush, red 1 flush, green	1 – –	– 1 –	Avant Arrêt Arrière	**XAL D311**	0.299
				Montée Arrêt Descente	**XAL D321**	0.299

(1) Push supplied with cap not clipped-in, allowing orientation through 90° in 360° steps.
(2) Standard turn to release.

Control stations and enclosures

Plastic control stations XAL D and XAL K
For Harmony® Ø 22 control and signalling units XB5
Stations for customer assembly: empty enclosures

815211



XAL D02

PF540623



XAL K01H29

Empty control stations (lid fixing screws and nut material: stainless steel type A4, AISI 316)

Description	Text and logo	Marking of the control station	Number of cut-outs	Reference	Weight kg
Light grey "RAL 7035" base Dark grey "RAL 7016" lid	Without	–	1	**XAL D01**	0.136
			2	**XAL D02**	0.193
			3	**XAL D03**	0.238
			4	**XAL D04**	0.278
			5	**XAL D05**	0.322
Light grey "RAL 7035" base Yellow "RAL 1021" lid For Emergency stop function	Without	–	1	**XAL K01**	0.136
			2	**XAL K02**	0.193
			3	**XAL K03**	0.238
			4	**XAL K04**	0.278
			5	**XAL K05**	0.322
	With text (1) and logo (2)	ARRET D'URGENCE	1	**XAL K01HFR**	0.136
		EMERGENCY STOP	1	**XAL K01H29**	0.136
		NOT-HALT	1	**XAL K01H44**	0.136
CSA + UL certified *(3)*					
Light grey "RAL 7035"base Dark grey "RAL 7016" lid	Without	–	1	**XAL D01H7**	0.136
			2	**XAL D02H7**	0.205
			3	**XAL D03H7**	0.238

(1) For supply of the text in an other language, please consult your Customer care centre.
(2) ***For complying with ISO 13850 standard, paragraph 4.4.6., Emergency Stop function logo has been added.***
(3) Volt-free commoning/earth terminal included.

General: page 2/4 Characteristics: page 2/6 Dimensions: page 2/30

Control stations and enclosures

Plastic control stations XAL D and XAL K
For Harmony® Ø 22 control and signalling units XB5
Stations for customer assembly: electrical blocks



ZEN L1111



ZAL VB●



ZB5 SZ3

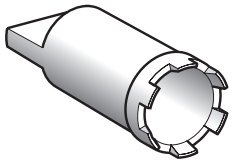

ZB5 AZ905



ZBE 101



ZBV V●



ZB5 AZ009

Electrical blocks and accessories for mounting in back of enclosure

Description	Description	Colour	Sold in lots of	Unit reference	Weight kg
Electrical blocks with screw clamp terminal connections					
Standard contact blocks *(1)*	N/O contact	–	5	**ZEN L1111**	0.015
	N/C contact	–	5	**ZEN L1121**	0.015
Light blocks with integral LED *(1)*	⎓ 24 V	White	5	**ZAL VB1**	0.015
		Green	5	**ZAL VB3**	0.015
		Red	5	**ZAL VB4**	0.015
		Yellow	5	**ZAL VB5**	0.015
		Blue	5	**ZAL VB6**	0.015
	∿ 110…120 V	White	5	**ZAL VG1**	0.015
		Green	5	**ZAL VG3**	0.015
		Red	5	**ZAL VG4**	0.015
		Yellow	5	**ZAL VG5**	0.015
		Blue	5	**ZAL VG6**	0.015
	∿ 230…240 V	White	5	**ZAL VM1**	0.015
		Green	5	**ZAL VM3**	0.015
		Red	5	**ZAL VM4**	0.015
		Yellow	5	**ZAL VM5**	0.015
		Blue	5	**ZAL VM6**	0.015

Description	For use with	Sold in lots of	Unit reference	Weight kg
Accessories for electrical blocks				
Blanking plug	Ø 22 mm units	10	**ZB5 SZ3**	0.008
Nut	Head fixing	10	**ZB5 AZ901**	0.002
Volt-free terminal	Commoning/earth	10	**XAL Z09**	0.003
Bezel tool	For tightening nut ZB5 AZ901	1	**ZB5 AZ905**	0.016

Electrical blocks and accessories for mounting beneath heads

Description	Description	Colour	Sold in lots of	Unit reference	Weight kg
Electrical blocks with screw clamp terminal connections *(2)* (for use with body/fixing collar ZB5 AZ009)					
Standard contact blocks	N/O contact	–	5	**ZBE 101**	0.016
	N/C contact	–	5	**ZBE 102**	0.016
Light blocks with integral LED	⎓ 24 V	White	5	**ZBV B1**	0.016
		Green	5	**ZBV B3**	0.016
		Red	5	**ZBV B4**	0.016
		Yellow	5	**ZBV B5**	0.016
		Blue	5	**ZBV B6**	0.016
	∿ 110…120 V	White	5	**ZBV G1**	0.016
		Green	5	**ZBV G3**	0.016
		Red	5	**ZBV G4**	0.016
		Yellow	5	**ZBV G5**	0.016
		Blue	5	**ZBV G6**	0.016
	∿ 230…240 V	White	5	**ZBV M1**	0.016
		Green	5	**ZBV M3**	0.016
		Red	5	**ZBV M4**	0.016
		Yellow	5	**ZBV M5**	0.016
		Blue	5	**ZBV M6**	0.016

Description	For use with		Level of protection	Unit reference	Weight kg
Accessories for electrical blocks					
LED suppressors	Electrical light blocks with integral LED	∿ 120 V	25…120 VA	**ZBZ VG**	0.010
		∿ 230 V	30…230 VA	**ZBZ VM**	0.010
Body/fixing collar Sold in lots of 10	Electrical blocks (contact or light)		–	**ZB5 AZ009**	0.006

(1) A maximum of 3 electrical blocks can be fitted per associated head.
(2) For electrical blocks for printed circuit board connection: please consult your customer care centre.

Control stations and enclosures

Plastic control stations XAL D and XAL K
For Harmony® Ø 22 control and signalling units XB5
Stations for customer assembly: heads


815224

ZB5 AA0


815224

ZB5 AA5


103545_2

ZB5 AP2S


815226

ZB5 AL3


815227

ZB5 CA2


815228

ZB5 CA5

Heads for spring return pushbuttons - unmarked

Shape of head	Type of push	Colour of cap	Reference	Weight kg
	Without cap *(1)*	–	**ZB5 AA0**	0.022
	Flush, with set of 6 coloured caps	6 colours *(2)*	**ZB5 AA9**	0.027
	Flush	White	**ZB5 AA1**	0.018
		Black	**ZB5 AA2**	0.018
		Green	**ZB5 AA3**	0.018
		Red	**ZB5 AA4**	0.018
		Yellow	**ZB5 AA5**	0.018
		Blue	**ZB5 AA6**	0.018
		Grey	**ZB5 AA8**	0.018
	Flush with transparent cap, for insertion of legend *(3)*	White	**ZB5 AA18**	0.018
		Green	**ZB5 AA38**	0.018
		Red	**ZB5 AA48**	0.018
		Yellow	**ZB5 AA58**	0.018
		Blue	**ZB5 AA68**	0.018
	Booted (coloured silicone) Can be replaced without dismantling the head	White	**ZB5 AP1S**	0.014
		Black	**ZB5 AP2S**	0.014
		Green	**ZB5 AP3S**	0.014
		Red	**ZB5 AP4S**	0.014
		Yellow	**ZB5 AP5S**	0.014
		Blue	**ZB5 AP6S**	0.014
	Projecting	White	**ZB5 AL1**	0.019
		Black	**ZB5 AL2**	0.019
		Green	**ZB5 AL3**	0.019
		Red	**ZB5 AL4**	0.019
		Yellow	**ZB5 AL5**	0.019
		Blue	**ZB5 AL6**	0.019
	Flush (high guard)	White	**ZB5 AA14**	0.020
		Black	**ZB5 AA24**	0.020
		Green	**ZB5 AA34**	0.020
		Red	**ZB5 AA44**	0.020
		Yellow	**ZB5 AA54**	0.020
		Blue	**ZB5 AA64**	0.020
	Recessed (high guard)	White	**ZB5 AA16**	0.019
		Black	**ZB5 AA26**	0.019
		Green	**ZB5 AA36**	0.019
		Red	**ZB5 AA46**	0.019
		Yellow	**ZB5 AA56**	0.019
		Blue	**ZB5 AA66**	0.019
	Flush	White	**ZB5 CA1**	0.019
		Black	**ZB5 CA2**	0.019
		Green	**ZB5 CA3**	0.019
		Red	**ZB5 CA4**	0.019
		Yellow	**ZB5 CA5**	0.019
		Blue	**ZB5 CA6**	0.019
	Projecting	White	**ZB5 CL1**	0.021
		Black	**ZB5 CL2**	0.021
		Green	**ZB5 CL3**	0.021
		Red	**ZB5 CL4**	0.021
		Yellow	**ZB5 CL5**	0.021
		Blue	**ZB5 CL6**	0.021

(1) Cap to be ordered separately, see page 2/27.
(2) Head supplied with 6 different coloured caps (white, black, green, red, yellow, blue).
(3) For legend ordering information, see page 2/26.

General: page 2/4 | Characteristics: page 2/6 | Dimensions: page 2/30

Control stations and enclosures

Plastic control stations XAL D and XAL K
For Harmony® Ø 22 control and signalling units XB5
Stations for customer assembly: heads


815233

ZB5 AA331


815234

ZB5 AA432


815235

ZB5 AL232


815236

ZB5 AC24


815237

ZB5 AC2

Heads for spring return pushbuttons - marked

Shape of head	Type of push	Marking		Colour of cap	Reference	Weight
		Text	Colour			kg
	Flush *(1)*	I	White	Green	**ZB5 AA331**	0.018
			Black	White	**ZB5 AA131**	0.018
		II	White	Green	**ZB5 AA336**	0.018
			Black	White	**ZB5 AA136**	0.018
		START	White	Green	**ZB5 AA333**	0.018
			Black	White	**ZB5 AA133**	0.018
		ON	White	Green	**ZB5 AA341**	0.018
			Black	White	**ZB5 AA141**	0.018
		MARCHE	White	Green	**ZB5 AA342**	0.018
			Black	White	**ZB5 AA142**	0.018
			White	Black	**ZB5 AA245**	0.018
			Black	White	**ZB5 AA145**	0.018
		O	White	Red	**ZB5 AA432**	0.018
				Black	**ZB5 AA232**	0.018
		ARRET	White	Red	**ZB5 AA433**	0.018
				Black	**ZB5 AA233**	0.018
		STOP	White	Red	**ZB5 AA434**	0.018
				Black	**ZB5 AA234**	0.018
		OFF	White	Red	**ZB5 AA435**	0.018
				Black	**ZB5 AA235**	0.018
		UP	Black	White	**ZB5 AA343**	0.018
		DOWN	White	Black	**ZB5 AA344**	0.018
		↑	White	Black	**ZB5 AA335**	0.018
			Black	White	**ZB5 AA334**	0.018
	Projecting *(1)*	O	White	Red	**ZB5 AL432**	0.019
				Black	**ZB5 AL232**	0.019
		ARRET	White	Red	**ZB5 AL433**	0.019
				Black	**ZB5 AL233**	0.019
		STOP	White	Red	**ZB5 AL434**	0.019
				Black	**ZB5 AL234**	0.019
		OFF	White	Red	**ZB5 AL435**	0.019
				Black	**ZB5 AL235**	0.019
	Flush *(1)*	I	White	Green	**ZB5 CA331**	0.019
		O	White	Red	**ZB5 CA432**	0.019
		+	White	Black	**ZB5 CA2934**	0.019
		↑	White	Black	**ZB5 CA2912**	0.019
		R	White	Blue	**ZB5 CA6939**	0.019

Mushroom heads for spring return pushbuttons

Shape of head	Diameter of push	Colour of push	Reference	Weight
	mm			kg
	30	Black	**ZB5 AC24**	0.027
		Green	**ZB5 AC34**	0.027
		Red	**ZB5 AC44**	0.027
		Yellow	**ZB5 AC54**	0.027
		Blue	**ZB5 AC64**	0.027
	40	Black	**ZB5 AC2**	0.046
		Green	**ZB5 AC3**	0.046
		Red	**ZB5 AC4**	0.046
		Yellow	**ZB5 AC5**	0.046
		Blue	**ZB5 AC6**	0.046

(1) Push supplied with cap not clipped-in, allowing orientation through 90° in 360° steps.

Control stations and enclosures

Plastic control stations XAL D and XAL K
For Harmony® Ø 22 control and signalling units XB5
Stations for customer assembly: heads

815243



ZB5 AS844

815246



ZB5 AS934

815244



ZB5 AT44

815245



ZB5 AS54

Mushroom heads for latching pushbuttons
(Emergency stop: colour red)

Shape of head	Type of push	Diameter of push mm	Colour of push	Reference	Weight kg
	**Trigger action Push-pull**	40	Red	**ZB5 AT84** *(1)*	0.050
	**Trigger action Turn to release**	30	Red	**ZB5 AS834** *(1)*	0.042
		40	Red	**ZB5 AS844** *(1)*	0.046
	**Trigger action Key release (key n° 455)** *(3)*	30	Red	**ZB5 AS934** *(1) (4)*	0.068
		40	Red	**ZB5 AS944** *(1)*	0.071
		60	Red	**ZB5 AS964** *(1)*	0.092
	**Trigger action Key release (key n° 4A185)**	40	Red	**ZB5 AS944D** *(1)*	0.071
	**Push-pull**	30	Black	**ZB5 AT24** *(2)*	0.044
			Red	**ZB5 AT44** *(2)*	0.044
		40	Black	**ZB5 AT2** *(2)*	0.049
			Red	**ZB5 AT4** *(2)*	0.049
	**Turn to release**	30	Black	**ZB5 AS42** *(2)*	0.040
			Red	**ZB5 AS44** *(2)*	0.040
		40	Black	**ZB5 AS52** *(2)*	0.044
			Red	**ZB5 AS54** *(2)*	0.044
			Yellow	**ZB5 AS55** *(2)*	0.044
	**Key release (key n° 455)** *(3)*	30	Black	**ZB5 AS72** *(2)*	0.040
			Red	**ZB5 AS74** *(2)*	0.040
		40	Black	**ZB5 AS12** *(2)*	0.044
			Red	**ZB5 AS14** *(2) (3)*	0.044
	**Key release (key n° 4A185)**	40	Red	**ZB5 AS14D** *(2)*	0.044

(1) Mushroom head Emergency stop trigger action and mechanical latching pushbuttons conform to standards EN/IEC 60204-1 and EN/ISO 13850, to Machinery Directive 2006/42/EC and to standard EN/IEC 60947-5-5.

(2) Mushroom head switching off mechanical latching pushbuttons conform to standards IEC 60364-5-53 and EN/IEC 60947-5-5. Please consult your customer care centre for full details of these standards and directives.

(3) For specific keys with other numbers, please consult your customer care centre.

(4) Other key numbers:
- *key n° 421E: add suffix **12** to the reference.*
- *key n° 458A: add suffix **10** to the reference.*
- *key n° 520E: add suffix **14** to the reference.*
- *key n° 3131A: add suffix **20** to the reference.*

*Example: The reference for a Ø 40 mushroom head for a trigger action latching pushbutton with release by key n° 421E becomes: **ZB5 AS94412**.*

General: page 2/4 Characteristics: page 2/6 Dimensions: page 2/30

Control stations and enclosures

Plastic control stations XAL D and XAL K
For Harmony® Ø 22 control and signalling units XB5
Stations for customer assembly: heads



ZB5 AD2

Heads for selector switches *(1)*

Shape of head	Type of operator	Number and type of positions	Reference	Weight kg
	**Standard handle, black**	2 - stay put 	**ZB5 AD2**	0.017
		2 - spring return from right to left 	**ZB5 AD4**	0.020
		3 - stay put 	**ZB5 AD3**	0.017
		3 - spring return to centre 	**ZB5 AD5**	0.017
		3 - spring return from left to centre 	**ZB5 AD7**	0.017
		3 - spring return from right to centre 	**ZB5 AD8**	0.017
	Standard handle, white	2 - stay put 	**ZB5 AD201**	0.017
		2 - spring return from right to left 	**ZB5 AD401**	0.020
		3 - stay put 	**ZB5 AD301**	0.017
		3 - spring return to centre 	**ZB5 AD501**	0.017
		3 - spring return from left to centre 	**ZB5 AD701**	0.017
		3 - spring return from right to centre 	**ZB5 AD801**	0.017
	Standard handle, green	2 - stay put 	**ZB5 AD203**	0.017
		2 - spring return from right to left 	**ZB5 AD403**	0.020
		3 - stay put 	**ZB5 AD303**	0.017
		3 - spring return to centre 	**ZB5 AD503**	0.017
		3 - spring return from left to centre 	**ZB5 AD703**	0.017
		3 - spring return from right to centre 	**ZB5 AD803**	0.017

(1) Can only be used for actuation of end of row (side) mounted contacts.

Control stations and enclosures

Plastic control stations XAL D and XAL K
For Harmony® Ø 22 control and signalling units XB5
Stations for customer assembly: heads

106215

ZB5 AD●●●

106219

ZB5 AJ●

Heads for selector switches *(1) (continued)*

Shape of head	Type of operator	Number and type of positions	Reference	Weight kg
	Standard handle, red	2 - stay put	**ZB5 AD204**	0.017
		2 - spring return from right to left	**ZB5 AD404**	0.020
		3 - stay put	**ZB5 AD304**	0.017
		3 - spring return to centre	**ZB5 AD504**	0.017
		3 - spring return from left to centre	**ZB5 AD704**	0.017
		3 - spring return from right to centre	**ZB5 AD804**	0.017
	Standard handle, yellow	2 - stay put	**ZB5 AD205**	0.017
		2 - spring return from right to left	**ZB5 AD405**	0.020
		3 - stay put	**ZB5 AD305**	0.017
		3 - spring return to centre	**ZB5 AD505**	0.017
		3 - spring return from left to centre	**ZB5 AD705**	0.017
		3 - spring return from right to centre	**ZB5 AD805**	0.017
	Standard handle, blue	2 - stay put	**ZB5 AD206**	0.017
		2 - spring return from right to left	**ZB5 AD406**	0.020
		3 - stay put	**ZB5 AD306**	0.017
		3 - spring return to centre	**ZB5 AD506**	0.017
		3 - spring return from left to centre	**ZB5 AD706**	0.017
		3 - spring return from right to centre	**ZB5 AD806**	0.017
	Long handle, black	2 - stay put	**ZB5 AJ2**	0.017
		2 - spring return from right to left	**ZB5 AJ4**	0.020
		3 - stay put	**ZB5 AJ3**	0.017
		3 - spring return to centre	**ZB5 AJ5**	0.017
		3 - spring return from left to centre	**ZB5 AJ7**	0.017
		3 - spring return from right to centre	**ZB5 AJ8**	0.017

(1) Can only be used for actuation of end of row (side) mounted contacts.

General: page 2/4 Characteristics: page 2/6 Dimensions: page 2/30

Control stations and enclosures

Plastic control stations XAL D and XAL K
For Harmony® Ø 22 control and signalling units XB5
Stations for customer assembly: heads

106221

ZB5 AD39

106224

ZB5 AG2

106223

ZB5 AG3

Heads for selector switches *(1) (continued)*

Shape of head	Type of operator	Number and type of positions *(2)*		Reference	Weight kg
	Knurled knob, black	2 - stay put		**ZB5 AD29**	0.020
		2 - spring return from right to left		**ZB5 AD49**	0.024
		3 - stay put		**ZB5 AD39**	0.020
		3 - spring return to centre		**ZB5 AD59**	0.020
		3 - spring return from left to centre		**ZB5 AD79**	0.020
		3 - spring return from right to centre		**ZB5 AD89**	0.020
	Key switch with key n° 455 *(4)*	2 - stay put		**ZB5 AG2** *(3)*	0.057
				ZB5 AG02 *(3)*	0.057
				ZB5 AG4 *(3)*	0.057
		2 - spring return from right to left		**ZB5 AG6** *(3)*	0.061
		3 - stay put		**ZB5 AG0** *(3)*	0.057
				ZB5 AG3 (3)	0.057
				ZB5 AG5 *(3)*	0.057
				ZB5 AG9 *(3)*	0.057
				ZB5 AG09 *(3)*	0.057
		3 - spring return from left to centre		**ZB5 AG1** *(3)*	0.057
		3 - spring return to centre		**ZB5 AG7** *(3)*	0.057
		3 - spring return from right to centre		**ZB5 AG8** *(3)*	0.057
				ZB5 AG08 *(3)*	0.057

(1) Can only be used for actuation of end of row (side) mounted contacts.
(2) The symbol "⚷" indicates key withdrawal position(s).
(3) Other key numbers:
*- key n° 421E: add suffix **12** to the reference,*
*- key n° 458A: add suffix **10** to the reference,*
*- key n° 520E: add suffix **14** to the reference,*
*- key n° 3131A: add suffix **20** to the reference.*
Example:
*For a key switch head with key n° 421E, 2-position stay put with key withdrawal from the left-hand position, the reference becomes: **ZB5 AG212**.*
(4) For specific keys with other numbers, please consult your customer care centre.

Control stations and enclosures

Plastic control stations XAL D and XAL K
For Harmony® Ø 22 control and signalling units XB5
Stations for customer assembly: heads

106224



ZB5 AG●●

Heads for selector switches *(1) (continued)*

Shape of head	Type of operator	Number and type of positions *(2)*		Reference	Weight kg
	**Key switch with key n° 8D1**	2 - stay put		**ZB5 AG2D**	0.057
				**ZB5 AG02D**	0.057
				**ZB5 AG4D**	0.057
		2 - spring return from right to left		**ZB5 AG6D**	0.061
		3 - stay put		**ZB5 AG0D**	0.057
				**ZB5 AG3D**	0.057
				**ZB5 AG5D**	0.057
				**ZB5 AG9D**	0.057
				**ZB5 AG09D**	0.057
				**ZB5 AG03D**	0.057
				**ZB5 AG04D**	0.057
		3 - spring return from left to centre		**ZB5 AG06D**	0.057
				**ZB5 AG1D**	0.057
				**ZB5 AG07D**	0.057
		3 - spring return from right to centre		**ZB5 AG8D**	0.057
				**ZB5 AG08D**	0.057
				**ZB5 AG05D**	0.057
		3 - spring return to centre		**ZB5 AG7D**	0.057

Heads for toggle switches

Shape of head	Description	Lever	Type of position	Reference	Weight kg
	**2-position**	Black	Stay put	**ZB5 AD28**	0.023
			Spring return	**ZB5 AD48**	0.023
		White	Stay put	**ZB5 AD2801**	0.023
		Red	Stay put	**ZB5 AD2804**	0.023
		Blue	Stay put	**ZB5 AD2806**	0.023

815307



ZB5 AD28

(1) Can only be used for actuation of end of row (side) mounted contacts.
(2) The symbol "⚷" indicates key withdrawal position(s).

Control stations and enclosures

Plastic control stations XAL D and XAL K
For Harmony® Ø 22 control and signalling units XB5
Stations for customer assembly: heads


815314

ZB5 AV053

Heads for pilot lights

Shape of head	For use with body comprising light source type	Colour of lens	Reference	Weight kg
With plain lens				
	With integral LED Protected LED	White	**ZB5 AV013**	0.017
		Green	**ZB5 AV033**	0.017
		Red	**ZB5 AV043**	0.017
		Yellow	**ZB5 AV053**	0.017
		Blue	**ZB5 AV063**	0.017
	With integral LED Protected LED	White	**ZB5 CV013**	0.020
		Green	**ZB5 CV033**	0.020
		Red	**ZB5 CV043**	0.020
		Yellow	**ZB5 CV053**	0.020
		Blue	**ZB5 CV063**	0.020
		5 colours *(1)*	**ZB5 CV003**	0.028
With plain lens, for insertion of legend *(2)*				
	With integral LED Protected LED	White	**ZB5 AV013E**	0.017
		Green	**ZB5 AV033E**	0.017
		Red	**ZB5 AV043E**	0.017
		Yellow	**ZB5 AV053E**	0.017
		Blue	**ZB5 AV063E**	0.017
With grooved lens *(3)*				
	With integral LED Protected LED	White	**ZB5 AV013S**	0.017
		Green	**ZB5 AV033S**	0.017
		Red	**ZB5 AV043S**	0.017
		Yellow	**ZB5 AV053S**	0.017
		Blue	**ZB5 AV063S**	0.017


815315

ZB5 AW313


815316

ZB5 AW363


815317

ZB5 AW143


815318

ZB5 CW313

Heads for spring return illuminated pushbuttons

Shape of head	Type of push	Colour	Reference	Weight kg
Only for use with bodies comprising a light source with integral LED Protected LED				
	Flush, plain lens	White	**ZB5 AW313**	0.017
		Green	**ZB5 AW333**	0.017
		Red	**ZB5 AW343**	0.017
		Yellow	**ZB5 AW353**	0.017
		Blue	**ZB5 AW363**	0.017
	Flush, grooved lens *(3)*	White	**ZB5 AW313S**	0.016
		Green	**ZB5 AW333S**	0.016
		Red	**ZB5 AW343S**	0.016
		Yellow	**ZB5 AW353S**	0.016
		Blue	**ZB5 AW363S**	0.016
	Flush for insertion of legend *(1)*	White	**ZB5 AA18**	0.018
		Green	**ZB5 AA38**	0.018
		Red	**ZB5 AA48**	0.018
		Yellow	**ZB5 AA58**	0.018
		Blue	**ZB5 AA68**	0.018
	Projecting	White	**ZB5 AW113**	0.018
		Green	**ZB5 AW133**	0.018
		Red	**ZB5 AW143**	0.018
		Yellow	**ZB5 AW153**	0.018
		Blue	**ZB5 AW163**	0.018
	Flush for insertion of legend *(1)*	White	**ZB5 CW313**	0.023
		Green	**ZB5 CW333**	0.023
		Red	**ZB5 CW343**	0.023
		Yellow	**ZB5 CW353**	0.023
		Blue	**ZB5 CW363**	0.023

(1) Head supplied with 5 different coloured lenses (white, green, red, yellow, blue) for insertion of legend. For legend ordering information: see page 2/26.
(2) For legend ordering information: see page 2/26.
(3) For use in bright ambient light conditions (outdoors in sunlight, for example).

Other versions Heads for flush pushbuttons with illuminated ring.
Please consult your customer care centre.

Control stations and enclosures

Plastic control stations XAL D and XAL K
For Harmony® Ø 22 control and signalling units XB5
Stations for customer assembly: heads

106225



ZB5 AK1263

106227



ZB5 AK1463

DF540628

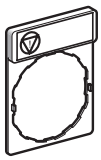

ZBY 4140

103547



ZB5 AW743

Heads for illuminated selector switches with standard handle

Only for use with bodies comprising a light source with integral LED

Protected LED

Shape of head	Number and type of positions	Colour of handle	Reference	Weight kg
	2 - stay put	White	**ZB5 AK1213**	0.021
		Green	**ZB5 AK1233**	0.021
		Red	**ZB5 AK1243**	0.021
		Yellow	**ZB5 AK1253**	0.021
		Blue	**ZB5 AK1263**	0.021
	2 - spring return from right to left	White	**ZB5 AK1413**	0.021
		Green	**ZB5 AK1433**	0.021
		Red	**ZB5 AK1443**	0.021
		Yellow	**ZB5 AK1453**	0.021
		Blue	**ZB5 AK1463**	0.021
	3 - stay put	White	**ZB5 AK1313**	0.021
		Green	**ZB5 AK1333**	0.021
		Red	**ZB5 AK1343**	0.021
		Yellow	**ZB5 AK1353**	0.021
		Blue	**ZB5 AK1363**	0.021
	3 - spring return to centre	White	**ZB5 AK1513**	0.021
		Green	**ZB5 AK1533**	0.021
		Red	**ZB5 AK1543**	0.021
		Yellow	**ZB5 AK1553**	0.021
		Blue	**ZB5 AK1563**	0.021
	3 - spring return from right to centre	White	**ZB5 AK1813**	0.021
		Green	**ZB5 AK1833**	0.021
		Red	**ZB5 AK1843**	0.021
		Yellow	**ZB5 AK1853**	0.021
		Blue	**ZB5 AK1863**	0.021
	3 - spring return from left to centre	White	**ZB5 AK1713**	0.021
		Green	**ZB5 AK1733**	0.021
		Red	**ZB5 AK1743**	0.021
		Yellow	**ZB5 AK1753**	0.021
		Blue	**ZB5 AK1763**	0.021

Heads for Ø 40 illuminated, latching, mushroom head pushbuttons *(1)*

Only for use with bodies comprising a light source with integral LED

Protected LED

Shape of head	Type of push	Colour of push	Reference	Weight kg
	Turn to release	White	**ZB5 AW713**	0.022
		Green	**ZB5 AW733**	0.022
		Red	**ZB5 AW743**	0.022
		Yellow	**ZB5 AW753**	0.022
		Blue	**ZB5 AW763**	0.022

(1) Use electrical blocks type ZBE 10●, specifically designed for "mounting beneath heads", see page 2/13.

General: page 2/4 | Characteristics: page 2/6 | Dimensions: page 2/30

Control stations and enclosures

Plastic control stations XAL D and XAL K
For Harmony® Ø 22 control and signalling units XB5
Stations for customer assembly: accessories

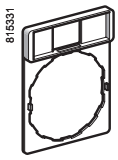

ZBZ 32

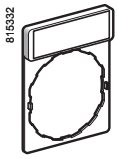

ZBY ●101

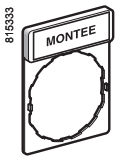

ZBY 2107



ZBZ 34



ZBY ●H101

Standard (30 x 40 mm) legend holders for 8 x 27 mm legends *(1)*

Description	Legend		Sold in lots of	Unit reference	Weight kg
	Colour	Marking			
Without legend	–	–	10	**ZBZ 32**	0.001
With blank legend (for engraving)	Black or red background	–	10	**ZBY 2101**	0.002
	White or yellow background	–	10	**ZBY 4101**	0.002
With 8 x 27 mm legend (with international marking)	Black or red background	O (black background)	1	**ZBY 2146**	0.002
		O (red background)	1	**ZBY 2931**	0.002
		I	1	**ZBY 2147**	0.002
		II	1	**ZBY 2148**	0.002
		O-I	1	**ZBY 2178**	0.002
		I-II	1	**ZBY 2179**	0.002
		I-O-II	1	**ZBY 2186**	0.002
		AUTO	1	**ZBY 2115**	0.002
		STOP	1	**ZBY 2304**	0.002
	Yellow background	⊘	1	**ZBY 4140** *(2)*	0.002
With 8 x 27 mm legend (with French language marking)	Black or red background *(3)*	ARRET (red background)	1	**ZBY 2104**	0.002
		ARRET (black background)	1	**ZBY 0104**	0.002
		ARRET GENERAL	1	**ZBY 2129**	0.002
		ARRET REARMEMENT	1	**ZBY 2133**	0.002
		ARRET MARCHE	1	**ZBY 2166**	0.002
		ARRIERE	1	**ZBY 2106**	0.002
		AUTO CYCLE-CYCLE	1	**ZBY 2198**	0.002
		AUTO CYCLE-MAIN	1	**ZBY 2199**	0.002
		AUTO-MAIN	1	**ZBY 2164**	0.002
		AUTO-O-MAIN	1	**ZBY 2185**	0.002
		AVANT	1	**ZBY 2105**	0.002
		AVANT-O-ARRIERE	1	**ZBY 2184**	0.002
		C-P-C NORMAL	1	**ZBY 2165**	0.002
		CYCLE-MAIN	1	**ZBY 2197**	0.002
		DECLENCHEMENT	1	**ZBY 2132**	0.002
		DEFAUT (black background)	1	**ZBY 2134**	0.002
		DEFAUT (red background)	1	**ZBY 2135**	0.002
		DEPART CYCLE	1	**ZBY 2195**	0.002
		DESCENTE	1	**ZBY 2108**	0.002
		DROITE	1	**ZBY 2109**	0.002
		ENCLENCHEMENT	1	**ZBY 2131**	0.002
		EN SERVICE	1	**ZBY 2111**	0.002
		FERMETURE	1	**ZBY 2114**	0.002
		GAUCHE	1	**ZBY 2110**	0.002
		HORS SERVICE	1	**ZBY 2112**	0.002
		HORS-EN	1	**ZBY 2167**	0.002
		LENT	1	**ZBY 2127**	0.002
		MAIN	1	**ZBY 2116**	0.002
		MARCHE	1	**ZBY 2103**	0.002
		MONTEE	1	**ZBY 2107**	0.002
		OUVERTURE	1	**ZBY 2113**	0.002
		PHASE / PHASE	1	**ZBY 2196**	0.002
		REARMEMENT (red bckgrnd.)	1	**ZBY 2123**	0.002
		REARMEMENT (black bckgrnd.)	1	**ZBY 0123**	0.002
		SOUS TENSION	1	**ZBY 2126**	0.002
		VITE	1	**ZBY 2128**	0.002
	Red background	ARRET D'URGENCE	1	**ZBY 2130** *(2)*	0.002

30 x 40 mm legend holders (flush mounting with bezel) for 8 x 27 mm legends

Description	For use with	Colour	Sold in lots of	Unit reference	Weight kg
Without legend	Circular heads	–	10	**ZBZ 34**	0.003
	Square heads	–	10	**ZBC Z34**	0.002
With blank legend	Circular heads	Black or red background	10	**ZBY 2H101**	0.004
		White or yellow background	10	**ZBY 4H101**	0.004
	Square heads	Black or red background	10	**ZBC Y2H101**	0.002
		White or yellow background	10	**ZBC Y4H101**	0.002

(1) Legends: see page 2/24.

*(2) **For complying with ISO 13850 standard, paragraph 4.4.6., Emergency Stop function logo ⊘ has been added.***

(3) "Start" functions: white characters on black background. "Stop" functions: white characters on red background (unless otherwise stated above).

Control stations and enclosures

Plastic control stations XAL D and XAL K
For Harmony® Ø 22 control and signalling units XB5
Stations for customer assembly: accessories

815334
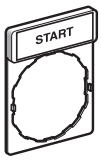

ZBY 2303

DF540629

ZBY 0140

815335
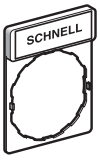

ZBY 2228

Standard (30 x 40 mm) legend holders with 8 x 27 mm legend *(continued)*

Description	Legend		Reference	Weight
	Colour	Marking		kg
With 8 x 27 mm legend (with English marking)	Black or red background *(1)*	AUTO-HAND	**ZBY 2364**	0.002
		AUTO-O-HAND	**ZBY 2385**	0.002
		CLOSE	**ZBY 2314**	0.002
		DOWN	**ZBY 2308**	0.002
		FAST	**ZBY 2328**	0.002
		FORWARD	**ZBY 2305**	0.002
		HAND	**ZBY 2316**	0.002
		HAND-OFF-AUTO	**ZBY 2387**	0.002
		INCH	**ZBY 2321**	0.002
		LEFT	**ZBY 2310**	0.002
		OFF	**ZBY 2312**	0.002
		OFF-ON	**ZBY 2367**	0.002
		ON	**ZBY 2311**	0.002
		OPEN	**ZBY 2313**	0.002
		POWER ON	**ZBY 2326**	0.002
		RESET (red background)	**ZBY 2323**	0.002
		RESET (black background)	**ZBY 2322**	0.002
		REVERSE	**ZBY 2306**	0.002
		RIGHT	**ZBY 2309**	0.002
		RUN	**ZBY 2334**	0.002
		SLOW	**ZBY 2327**	0.002
		START	**ZBY 2303**	0.002
		STOP-START	**ZBY 2366**	0.002
		UP	**ZBY 2307**	0.002
	Red background	EMERGENCY STOP	**ZBY 2330** *(2)*	0.002
With 8 x 27 mm legend (with German marking)	Black or red background *(1)*	AB	**ZBY 2208**	0.002
		AUF	**ZBY 2207**	0.002
		AUS	**ZBY 2204**	0.002
		AUS-EIN	**ZBY 2266**	0.002
		AUS-IN BETRIEB	**ZBY 2267**	0.002
		AUS-RUCKSTELLUND	**ZBY 2233**	0.002
		AUSSCHALTEN	**ZBY 2232**	0.002
		AUTO-HAND	**ZBY 2364**	0.002
		AUTO-O-HAND	**ZBY 2385**	0.002
		AUTOZYKL-HAND	**ZBY 2299**	0.002
		AUTOZYKL-1 ZYKL	**ZBY 2298**	0.002
		C-P-C-NORMAL	**ZBY 2265**	0.002
		EIN	**ZBY 2203**	0.002
		EINSCHALTEN	**ZBY 2231**	0.002
		HAND	**ZBY 2316**	0.002
		LANGSAM	**ZBY 2227**	0.002
		LINKS	**ZBY 2210**	0.002
		NOT-AUS (red background)	**ZBY 2230**	0.002
		ÖFFNEN	**ZBY 2213**	0.002
		RECHTS	**ZBY 2209**	0.002
		RUCKSTELLUNG	**ZBY 2223**	0.002
		SCHLIESSEN	**ZBY 2214**	0.002
		SCHNELL	**ZBY 2228**	0.002
		SPANNUNG EIN	**ZBY 2226**	0.002
		STEUERUNG AUS	**ZBY 2212**	0.002
		STEUERUNG EIN	**ZBY 2211**	0.002
		STORUNG (black background)	**ZBY 2234**	0.002
		STORUNG (red background)	**ZBY 2235**	0.002
		VOR	**ZBY 2205**	0.002
		VOR-O-ZURUCK	**ZBY 2284**	0.002
		ZURUCK	**ZBY 2206**	0.002
		ZYKLUS-HAND	**ZBY 2297**	0.002
		ZYKLUS-START	**ZBY 2295**	0.002
	Red background	NOT-HALT	**ZBY 2229** *(2)*	0.002
	Yellow background	NOT-HALT	**ZBY 22420001** *(2)*	0.002

(1) "Start" functions: white characters on black background. "Stop" functions: white characters on red background (unless otherwise stated above).
(2) ***For complying with ISO 13850 standard, paragraph 4.4.6., Emergency Stop function logo has been added.***

General: page 2/4 | Characteristics: page 2/6 | Dimensions: page 2/30

Control stations and enclosures

Plastic control stations XAL D and XAL K
For Harmony® Ø 22 control and signalling units XB5
Stations for customer assembly: accessories

522035

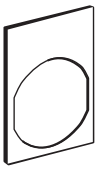

ZAL Y4

Legends (30 x 42 mm) for engraving

Description	Colour of background	Sold in lots of	Unit reference	Weight kg
Legends for engraving 2 lines of text	Black or red	10	**ZAL Y2**	0.001
	White or yellow	10	**ZAL Y4**	0.001

Legends (8 x 27 mm) for engraving

For use with	Colour of background	Sold in lots of	Unit reference	Weight kg
30 x 40 mm legend holder	Black or red	10	**ZBY 0101**	0.001
	White or yellow	10	**ZBY 0102**	0.001
	Yellow	10	**ZBY 0140** *(1)*	0.001

Sheets of 76 (8 x 27 mm) peel-off legends

For use with	Supplied with	Sold in lots of	Unit reference	Weight kg
30 x 40 mm legend holders **ZBZ 32** and **ZBZ 34**	Backing board and protective transparent cover	10	**ZBY 4100**	0.043

8 x 27 mm marked legends (for 30 x 40 mm legend holders ZBZ 32 and ZBZ 34)

815339



ZBY 02178

815340



ZBY 0●104

Language	Colour of background	Marking	Reference	Weight kg
International	Black or red *(2)*	O (black background)	**ZBY 02146**	0.001
		O (red background)	**ZBY 02931**	0.001
		I	**ZBY 02147**	0.001
		II	**ZBY 02148**	0.001
		O-I	**ZBY 02178**	0.001
		I-II	**ZBY 02179**	0.001
		I-O-II	**ZBY 02186**	0.001
		AUTO	**ZBY 02115**	0.001
		STOP	**ZBY 02304**	0.001
French	Black or red *(2)*	ARRET (red background)	**ZBY 02104**	0.001
		ARRET (black background)	**ZBY 00104**	0.001
		ARRET GENERAL	**ZBY 02129**	0.001
		ARRET REARMEMENT	**ZBY 02133**	0.001
		ARRET-MARCHE	**ZBY 02166**	0.001
		ARRIERE	**ZBY 02106**	0.001
		AUTO CYCLE-CYCLE	**ZBY 02198**	0.001
		AUTO CYCLE-MAIN	**ZBY 02199**	0.001
		AUTO-MAIN	**ZBY 02164**	0.001
		AUTO-O-MAIN	**ZBY 02185**	0.001
		AVANT	**ZBY 02105**	0.001
		AVANT-O-ARRIERE	**ZBY 02184**	0.001
		C-P-C-NORMAL	**ZBY 02165**	0.001
		CYCLE-MAIN	**ZBY 02197**	0.001
		DECLENCHEMENT	**ZBY 02132**	0.001
		DEFAUT (black background)	**ZBY 02134**	0.001
		DEFAUT (red background)	**ZBY 02135**	0.001
		DEPART CYCLE	**ZBY 02195**	0.001
		DESCENTE	**ZBY 02108**	0.001
		DROITE	**ZBY 02109**	0.001
		ENCLENCHEMENT	**ZBY 02131**	0.001
		EN SERVICE	**ZBY 02111**	0.001
		FERMETURE	**ZBY 02114**	0.001
		GAUCHE	**ZBY 02110**	0.001
		HORS SERVICE	**ZBY 02112**	0.001
		HORS-EN	**ZBY 02167**	0.001
		LENT	**ZBY 02127**	0.001
		MAIN	**ZBY 02116**	0.001
		MARCHE	**ZBY 02103**	0.001
		MONTEE	**ZBY 02107**	0.001
		OUVERTURE	**ZBY 02113**	0.001
		PHASE / PHASE	**ZBY 02196**	0.001
		REARMEMENT (red background)	**ZBY 02123**	0.001
		REARMEMENT (black background)	**ZBY 00123**	0.001
		SOUS TENSION	**ZBY 02126**	0.001
		VITE	**ZBY 02128**	0.001
	Red	ARRET D'URGENCE	**ZBY 02130** *(1)*	0.001

(1) ***For complying with ISO 13850 standard, paragraph 4.4.6., Emergency Stop function logo has been added.***

(2) "Start" functions: white characters on black background. "Stop" functions: white characters on red background (unless otherwise stated above).

Control stations and enclosures

Plastic control stations XAL D and XAL K
For Harmony® Ø 22 control and signalling units XB5
Stations for customer assembly: accessories

815341



ZBY 02303

8 x 27 mm marked legends (for 30 x 40 mm legend holders ZBZ 32 and ZBZ 34) *(continued)*

Language	Colour of background	Marking	Reference	Weight kg
English	Black or red *(1)*	AUTO-HAND	**ZBY 02364**	0.001
		AUTO-O-HAND	**ZBY 02385**	0.001
		CLOSE	**ZBY 02314**	0.001
		DOWN	**ZBY 02308**	0.001
		FAST	**ZBY 02328**	0.001
		FORWARD	**ZBY 02305**	0.001
		HAND	**ZBY 02316**	0.001
		HAND-OFF-AUTO	**ZBY 02387**	0.001
		INCH	**ZBY 02321**	0.001
		LEFT	**ZBY 02310**	0.001
		OFF	**ZBY 02312**	0.001
		OFF-ON	**ZBY 02367**	0.001
		ON	**ZBY 02311**	0.001
		OPEN	**ZBY 02313**	0.001
		POWER ON	**ZBY 02326**	0.001
		RESET (red background)	**ZBY 02323**	0.001
		RESET (black background)	**ZBY 02322**	0.001
		REVERSE	**ZBY 02306**	0.001
		RIGHT	**ZBY 02309**	0.001
		RUN	**ZBY 02334**	0.001
		SLOW	**ZBY 02327**	0.001
		START	**ZBY 02303**	0.001
		STOP-START	**ZBY 02366**	0.001
		UP	**ZBY 02307**	0.001
	Red	EMERGENCY STOP	**ZBY 02330** *(2)*	0.001
German	Black or red *(1)*	AB	**ZBY 02208**	0.001
		AUF	**ZBY 02207**	0.001
		AUS	**ZBY 02204**	0.001
		AUS-EIN	**ZBY 02266**	0.001
		AUS-IN BETRIEB	**ZBY 02267**	0.001
		AUS-RUCKSTELLUNG	**ZBY 02233**	0.001
		AUSSCHALLEN	**ZBY 02232**	0.001
		AUTO-HAND	**ZBY 02364**	0.001
		AUTO-O-HAND	**ZBY 02385**	0.001
		AUTOZYKL-HAND	**ZBY 02299**	0.001
		AUTOZYKL- 1 ZYKL	**ZBY 02298**	0.001
		C-P-C-NORMAL	**ZBY 02265**	0.001
		EIN	**ZBY 02203**	0.001
		EINSCHALTEN	**ZBY 02231**	0.001
		HAND	**ZBY 02316**	0.001
		LANGSAM	**ZBY 02227**	0.001
		LINKS	**ZBY 02210**	0.001
		NOT-AUS (red background)	**ZBY 02230**	0.001
		ÖFFNEN	**ZBY 02213**	0.001
		RECHTS	**ZBY 02209**	0.001
		RUCKSTELLUNG	**ZBY 02223**	0.001
		SCHLIESSEN	**ZBY 02214**	0.001
		SCHNELL	**ZBY 02228**	0.001
		SPANNUNG EIN	**ZBY 02226**	0.001
		STEUERUNG AUS	**ZBY 02212**	0.001
		STEUERUNG EIN	**ZBY 02211**	0.001
		STORUNG (black background)	**ZBY 02234**	0.001
		STORUNG (red background)	**ZBY 02235**	0.001
		VOR	**ZBY 02205**	0.001
		VOR-O-ZURUCK	**ZBY 02284**	0.001
		ZURUCK	**ZBY 02206**	0.001
		ZYKLUS-HAND	**ZBY 02297**	0.001
		ZYKLUS-START	**ZBY 02295**	0.001
	Red	NOT-HALT	**ZBY 02229** *(2)*	0.001
	Yellow	NOT-HALT	**ZBY 022420001** *(2)*	0.001

815342



ZBY 02228

DF540548



XBY 2U

(1) "Start" functions: white characters on black background. "Stop" functions: white characters on red background (unless otherwise stated above).

(2) ***For complying with ISO 13850 standard, paragraph 4.4.6., Emergency Stop function logo has been added.***

General: page 2/4 | Characteristics: page 2/6 | Dimensions: page 2/30

Control stations and enclosures

Plastic control stations XAL D and XAL K
For Harmony® Ø 22 control and signalling units XB5
Stations for customer assembly: accessories

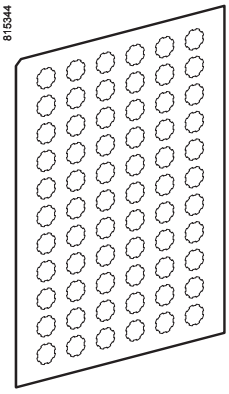

ZBY 1●●●



XBY 2U



ZBY 9130

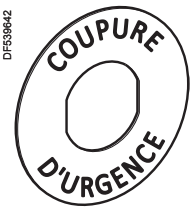

ZBY 9160

Legends for pushbuttons, switches and pilot lights XB5 A

Description	Marking		Sold in lots of	Unit reference	Weight kg
Sheets of 66 circular peel-off transparent self-adhesive legends	Without		10	**ZBY 1101**	0.017
	International	O	10	**ZBY 1146**	0.017
		I	10	**ZBY 1147**	0.017
		II	10	**ZBY 1148**	0.017
		III	10	**ZBY 1149**	0.017
		AUTO	10	**ZBY 1115**	0.017
		STOP	10	**ZBY 1304**	0.017
		⬆	10	**ZBY 1912**	0.017
	French	ARRET	10	**ZBY 1104**	0.017
		ARRIERE	10	**ZBY 1106**	0.017
		AVANT	10	**ZBY 1105**	0.017
		AUTO	10	**ZBY 1115**	0.017
		DESCENTE	10	**ZBY 1108**	0.017
		MAIN	10	**ZBY 1116**	0.017
		MARCHE	10	**ZBY 1103**	0.017
		MONTEE	10	**ZBY 1107**	0.017
	English	HAND	10	**ZBY 1316**	0.017
		OFF	10	**ZBY 1312**	0.017
		ON	10	**ZBY 1311**	0.017
		START	10	**ZBY 1303**	0.017
	German	AB	10	**ZBY 1208**	0.017
		AUF	10	**ZBY 1207**	0.017
		AUS	10	**ZBY 1204**	0.017
		EIN	10	**ZBY 1203**	0.017
		ZU	10	**ZBY 1214**	0.017
Strip of 66 square peel-off transparent self-adhesive legends	Without		10	**ZBC Y1101**	0.017

"SIS Label" labelling software (for legend sheets ZBY 1101, ZBY 4100 and ZBC Y1101)

Application	Reference	Weight kg
Legend design for English, French, German, Italian and Spanish	**XBY 2U**	0.100

Circular yellow legends for mushroom head pushbuttons

Used for "Emergency stop" function (1)

Diameter mm	Conforming to standards	Marking on yellow background	Reference	Weight kg
60	EN/IEC 60204-1 and EN/ISO 13850	–	**ZBY 9140**	0.004
		ARRET D'URGENCE	**ZBY 9130**	0.004
		EMERGENCY STOP	**ZBY 9330**	0.004
		NOT-HALT	**ZBY 9230**	0.004
		PARADA DE EMERGENCIA	**ZBY 9430**	0.004
		ARRESTO DE EMERGENZA	**ZBY 9630**	0.004
90	EN/IEC 60204-1 and EN/ISO 13850	–	**ZBY 8140**	0.008
		ARRET D'URGENCE	**ZBY 8130**	0.008
		EMERGENCY STOP	**ZBY 8330**	0.008
		NOT-HALT	**ZBY 8230**	0.008
		PARADA DE EMERGENCIA	**ZBY 8430**	0.008
		ARRESTO DE EMERGENZA	**ZBY 8630**	0.008

Used for "Emergency switching off" function

60	EN/IEC 60204-1	–	**ZBY 9101**	0.004
		COUPURE D'URGENCE	**ZBY 9160**	0.004
		EMERGENCY SWITCHING OFF	**ZBY 9360**	0.004
		NOT-AUS	**ZBY 9260**	0.004
		DESCONEXION DE EMERGENCIA	**ZBY 9460**	0.004
		INTERRUZIONE DI EMERGENZA	**ZBY 9660**	0.004
90	EN/IEC 60204-1	–	**ZBY 8101**	0.008
		COUPURE D'URGENCE	**ZBY 8160**	0.008
		EMERGENCY SWITCHING OFF	**ZBY 8360**	0.008
		NOT-AUS	**ZBY 8260**	0.008
		DESCONEXION DE EMERGENCIA	**ZBY 8460**	0.008
		INTERRUZIONE DI EMERGENZA	**ZBY 8660**	0.008

*(1) **For complying with ISO 13850 standard, paragraph 4.4.6., Emergency Stop function logo ⓥ has been added.***

2

815197

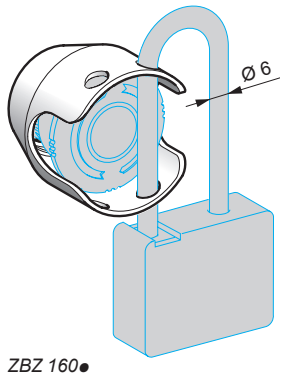

ZBZ 160●

Metal guards *(1)*

Description	For use with	Colour	Reference	Weight kg
Metal guards Padlockable	Emergency stop function only with the following Ø 40 trigger action pushbuttons: XB5 AT8●, XB5 AS8●, XB5 AS9●, ZB5 AT8●, ZB5 AS8●, ZB5 AS9●.	Chromium plated	**ZBZ 1600**	0.046
		Black	**ZBZ 1602**	0.046
		Red	**ZBZ 1604**	0.046
		Blue	**ZBZ 1605**	0.046

Pushbutton caps - unmarked

For use with	Cap		Sold in lots of	Unit reference	Weight kg
	Type	Colour			
Circular pushbutton heads ZB5 AA supplied without cap	Flush	White	10	**ZBA 1**	0.001
		Black	10	**ZBA 2**	0.001
		Green	10	**ZBA 3**	0.001
		Red	10	**ZBA 4**	0.001
		Yellow	10	**ZBA 5**	0.001
		Blue	10	**ZBA 6**	0.001
		6 colours *(2)*	1	**ZBA 9**	0.006
	Projecting	White	10	**ZBL 1**	0.001
		Black	10	**ZBL 2**	0.001
		Green	10	**ZBL 3**	0.001
		Red	10	**ZBL 4**	0.001
		Yellow	10	**ZBL 5**	0.001
		Blue	10	**ZBL 6**	0.001
		6 colours *(2)*	1	**ZBL 9**	0.006

815347



ZBA ●

815348



ZBL ●

Pushbutton caps - marked *(3)* (sold in lots of 10)

For use with	Type of push	Marking		Colour of cap	Unit reference	Weight kg
		Text	Colour			
Circular pushbutton heads ZB5 AA supplied without cap	Flush	I	White	Green	**ZBA 331**	0.001
			Black	White	**ZBA 131**	0.001
		II	White	Green	**ZBA 336**	0.001
			Black	White	**ZBA 136**	0.001
		III	White	Green	**ZBA 337**	0.001
			Black	White	**ZBA 137**	0.001
		IV	White	Green	**ZBA 338**	0.001
			Black	White	**ZBA 138**	0.001
		START	White	Green	**ZBA 333**	0.001
			Black	White	**ZBA 133**	0.001
		ON	White	Green	**ZBA 341**	0.001
			Black	White	**ZBA 141**	0.001
		MARCHE	White	Green	**ZBA 342**	0.001
			Black	White	**ZBA 142**	0.001
		⏻	White	Black	**ZBA 245**	0.001
			Black	White	**ZBA 145**	0.001
		UP	Black	White	**ZBA 343**	0.001
		DOWN	White	Black	**ZBA 344**	0.001
		⬆	White	Black	**ZBA 335**	0.001
			Black	White	**ZBA 334**	0.001
		O	White	Red	**ZBA 432**	0.001
				Black	**ZBA 232**	0.001
		ARRET	White	Red	**ZBA 433**	0.001
				Black	**ZBA 233**	0.001
		STOP	White	Red	**ZBA 434**	0.001
				Black	**ZBA 234**	0.001
		OFF	White	Red	**ZBA 435**	0.001
				Black	**ZBA 235**	0.001
		⚠	White	Green	**ZBA 346**	0.001
		R	White	Blue	**ZBA 639**	0.001
		+	White	Black	**ZBA 2934**	0.001
		-	White	Black	**ZBA 2935**	0.001

815349



ZBA 333

(1) These guards can be used in conjunction with a legend holder, but only those for mounting directly beneath the head. See page 2/13.
(2) Set of 6 different coloured caps: white, black, green, red, yellow, blue.
(3) Can be clipped-in at 90° steps through 360°.

General: page 2/4 | Characteristics: page 2/6 | Dimensions: page 2/30



ZB2 BP01●



ZBV 01●3

Coloured boots

For use with	Colour	Sold in lots of	Unit reference	Weight kg
Coloured boots (can be replaced without dismantling the head)	Black	10	**ZB2 BP012**	0.003
	Green	10	**ZB2 BP013**	0.003
	Red	10	**ZB2 BP014**	0.003
	Yellow	10	**ZB2 BP015**	0.003
	Blue	10	**ZB2 BP016**	0.003

Lens caps

Circular lens caps for light sources with integral LED

Pilot lights	White	10	**ZBV 0113**	0.002
	Green	10	**ZBV 0133**	0.002
	Red	10	**ZBV 0143**	0.002
	Yellow	10	**ZBV 0153**	0.002
	Blue	10	**ZBV 0163**	0.002
	5 different coloured grooved lenses *(1)*	1	**ZBV 0103S**	0.010
Illuminated pushbuttons, with flush push	White	10	**ZBW 9113**	0.002
	Green	10	**ZBW 9133**	0.002
	Red	10	**ZBW 9143**	0.002
	Yellow	10	**ZBW 9153**	0.002
	Blue	10	**ZBW 9163**	0.002
Illuminated pushbuttons, with projecting push	White	10	**ZBW 9313**	0.002
	Green	10	**ZBW 9333**	0.002
	Red	10	**ZBW 9343**	0.002
	Yellow	10	**ZBW 9353**	0.002
	Blue	10	**ZBW 9363**	0.002

Square lens caps for light sources with integral LED

Pilot lights	White	10	**ZBC V0113**	0.002
	Green	10	**ZBC V0133**	0.002
	Red	10	**ZBC V0143**	0.002
	Yellow	10	**ZBC V0153**	0.002
	Blue	10	**ZBC V0163**	0.002
Illuminated pushbuttons, with flush push	White	10	**ZBC W9113**	0.002
	Green	10	**ZBC W9133**	0.002
	Red	10	**ZBC W9143**	0.002
	Yellow	10	**ZBC W9153**	0.002
	Blue	10	**ZBC W9163**	0.002
Illuminated pushbuttons, with projecting push	White	10	**ZBC W9313**	0.002
	Green	10	**ZBC W9333**	0.002
	Red	10	**ZBC W9343**	0.002
	Yellow	10	**ZBC W9353**	0.002
	Blue	10	**ZBC W9363**	0.002

Replacement keys for Emergency stop key release heads and key switches



ZBG 455



ZBD LU1

Description	Key number	Reference	Weight kg
Set of 2 keys	455	**ZBG 455**	0.013
	421E	**ZBG 421E**	0.014
	458A	**ZBG 458A**	0.014
	520E	**ZBG 520E**	0.014
	3131A	**ZBG 3131A**	0.014
	4A185	**ZBD A185**	0.014
	LU1	**ZBD LU1**	0.014
	LU2	**ZBD LU2**	0.014
	LU3	**ZBD LU3**	0.014
	LU4	**ZBD LU4**	0.014
	LU5	**ZBD LU5**	0.014
	LU6	**ZBD LU6**	0.014
	LU7	**ZBD LU7**	0.014
	LU8	**ZBD LU8**	0.014
	LU9	**ZBD LU9**	0.014
	LU10	**ZBD LU10**	0.014
	LU11	**ZBD LU11**	0.014
	LU12	**ZBD LU12**	0.014
	LU13	**ZBD LU13**	0.014
	LU14	**ZBD LU14**	0.014
	8D1	**ZBD 8D1**	0.014

(1) Set of 5 different coloured lenses: white, green, red, yellow and blue.

Control stations and enclosures
Plastic control stations XAL D and XAL K
For Harmony® Ø 22 control and signalling units XB5

Dimensions

Single-way control stations XAL

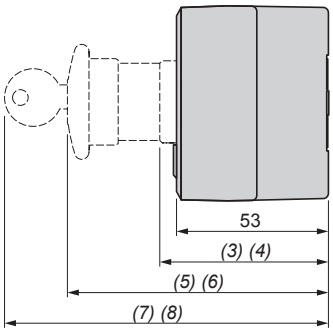

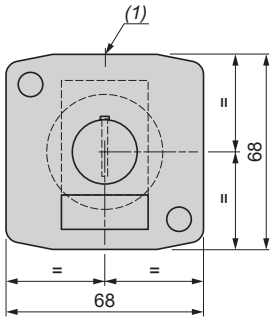

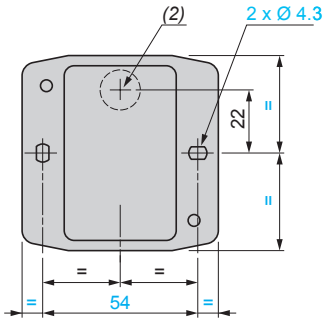

2-way control stations XAL

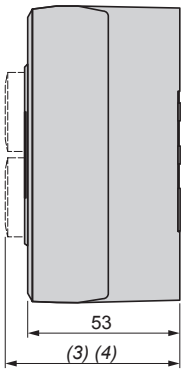

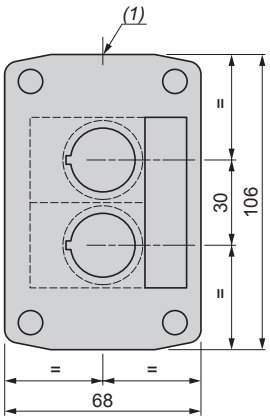

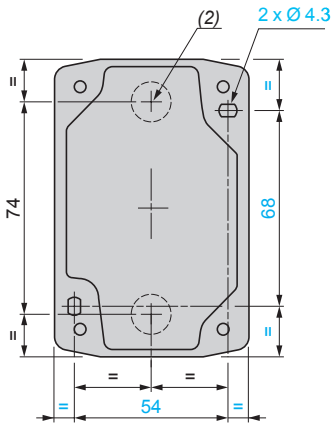

3-way control stations XAL

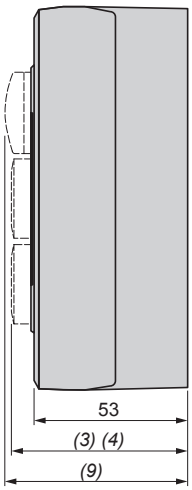

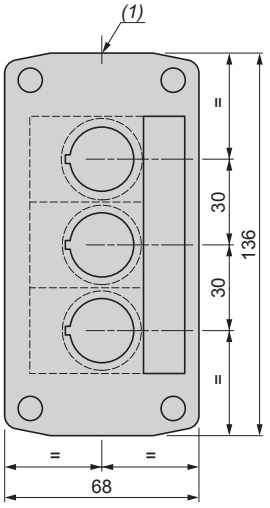

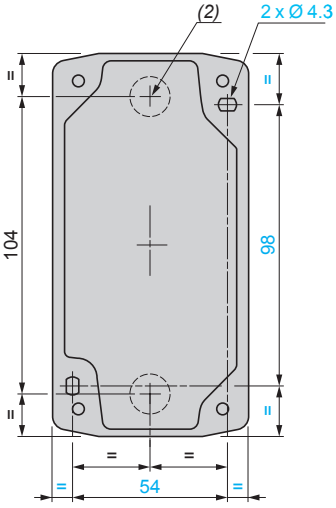

(1) 2 knock-outs for Pg 13.5 cable gland, maximum capacity 12 mm.
(2) Knock-out for cable entry, maximum capacity 14 mm.

Examples
(3) 62 mm for flush pushbuttons.
(4) 66 mm for projecting pushbuttons.
(5) 91 mm for latching mushroom head Emergency stop pushbuttons.
(6) 82.5 mm for key switches.
(7) 115 mm for latching mushroom head Emergency stop pushbuttons with key release.
(8) 105.5 mm for key switches with key inserted.
(9) 64 mm for pilot lights.

General: page 2/4
Characteristics: page 2/6
References: page 2/8

Dimensions (continued)

4-way control stations XAL

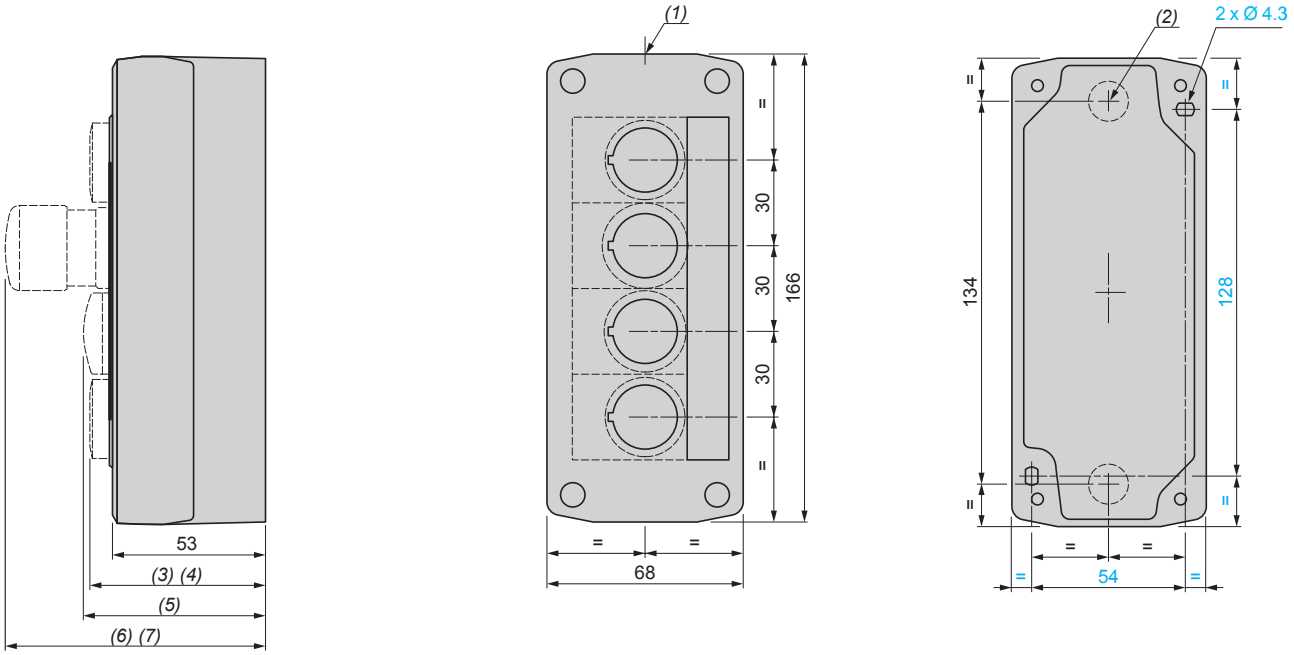

5-way control stations XAL

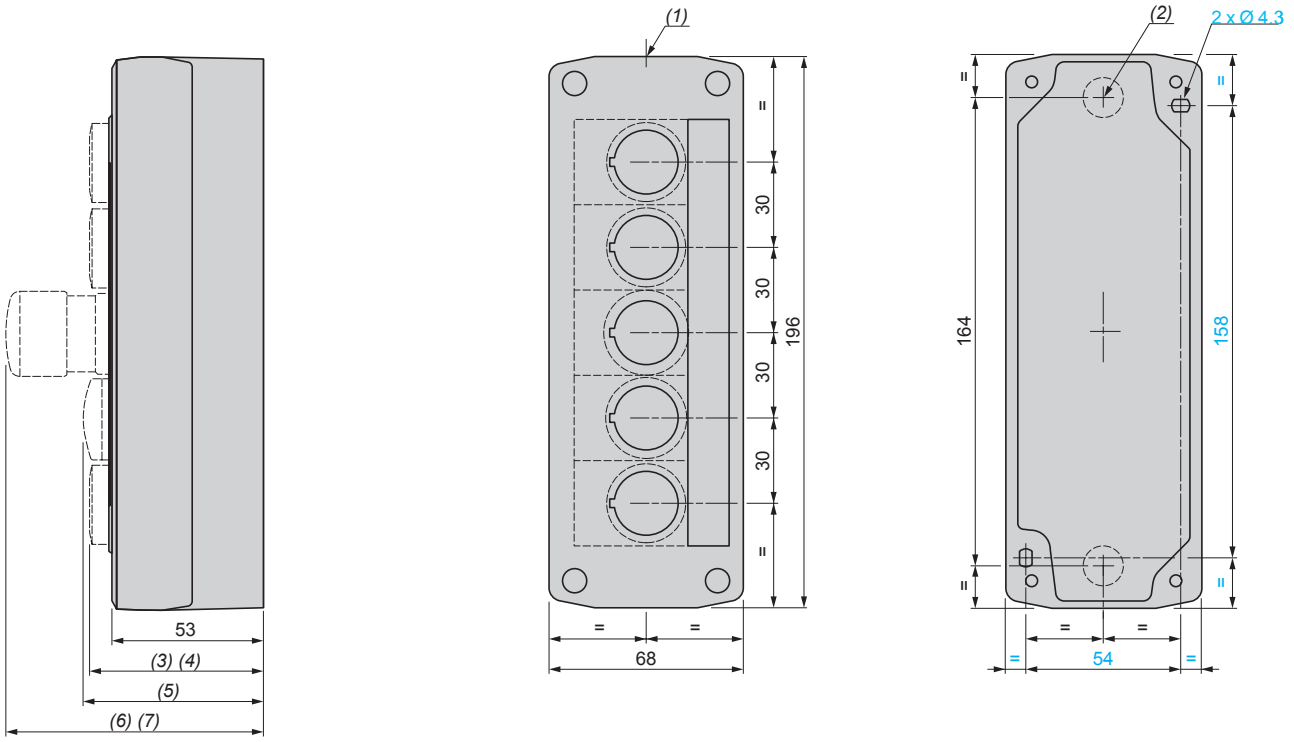

(1) 2 knock-outs for Pg 13.5 cable gland, maximum capacity 12 mm.
(2) Knock-out for cable entry, maximum capacity 14 mm.

Examples
(3) 62 mm for flush pushbuttons.
(4) 66 mm for projecting pushbuttons.
(5) 64 mm for pilot lights.
(6) 91.5 mm for mushroom head pushbuttons.
(7) 80 mm for selector switches.

Control stations and enclosures

Plastic control stations XAL G for severe environments

With cut-outs for Ø 22 control and signalling units XB5

Presentation

■ Plastic control stations XAL G are designed for use in severe environments (dirty, dusty or humid atmospheres). They ensure an increased degree of protection (IP 66, IP 69K) against the penetration of solid bodies and liquids and a high level of protection against heat and chemical products (acids, solvents, oils, alkaline substances).

■ The empty control stations XAL G are available with one, two, three, four or five Ø 22 mm cut-outs for the fitting of any of the catalogue listed Harmony control and signalling units type XB5.

■ Control stations XAL G comprise a lid and a base, with four captive stainless steel screws securing the lid.
□ The XB5 control and signalling units are mounted on the lid and secured by the head of the unit.
□ The electrical blocks of the XB5 units are mounted directly beneath the heads using a body/fixing collar (station method).
□ An anti-rotation plate is not required when mounting selector/key switches or Emergency stop mushroom heads: a notch incorporated in each cut-out fulfils this function.
□ The use of booted heads is recommended when using the station in severe environments.

■ The smooth and uniform surface of the lids simplifies cleaning of the installed control station.

■ Self-adhesive legends, with or without marking, specifically for use with these control stations are available as an accessory. They are resistant to high pressure cleaning and to heat.

Environment

Protective treatment	Standard version		"TC" and "TH"		
Ambient air temperature (around the device)	For storage	**°C**	- 40…+ 70		
	For operation	**°C**	- 25…+ 70		
Electric shock protection	Conforming to IEC 61140		Class II		
Degree of protection	Conforming to IEC 60529		IP 66, IP 69K		
High pressure cleaning resistance		**Bar**	100 at 0.2 m and 80 °C		
Mechanical shock protection (empty control stations)	Conforming to EN 50102		IK 05		
Conformity to standards			EN/IEC 60947-1, EN/IEC 60947-5-1		
Material			Lid and base: mineral reinforced polyamide		
Colour			Lid and base: black "RAL 9005"		
Cable entries			Two ISO 20 open entries (1)		
Resistance to chemical products			Results	Test conditions	
				Concentration (%)	Temperature (°C)
+ : good resistance **O**: limited resistance **-** : no resistance	Acetic acid		**O**	10	–
	Acetone		**+**	–	–
	Ammonia		**+**	–	–
	Benzene		**+**	–	–
	Boric acid		**O**	–	–
	Butter		**+**	–	–
	Citric acid		**+**	10	–
	Cutting compounds		**+**	–	–
	Ethane		**+**	–	–
	Ethanol		**+**	–	–
	Ethylene		**+**	–	–
	Fatty acids		**+**	–	–
	Fatty alcohols		**+**	–	–
	Formic acid		**-**	10	50
	Hydrogen peroxide		**-**	30	–
	Lactic acid		**+**	–	10
	Lactic acid		**-**	–	90
	Milk		**+**	–	–
	Motor oils and greases		**+**	–	–
	Nitric acid		**-**	2	–
	Oils (vegetable, mineral)		**+**	–	–
	Petroleum		**+**	–	–
	Uric acid		**+**	20	–
	Detergent		**+**	max.	60

(1) One ISO 20 cable entry blanking plug included with control station enclosures XAL G.

Control stations and enclosures

Plastic control stations XAL G for severe environments

With cut-outs for Ø 22 control and signalling units XB5

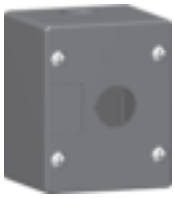

XAL G01



XAL G02

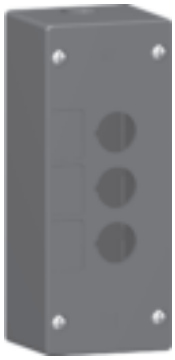

XAL G03

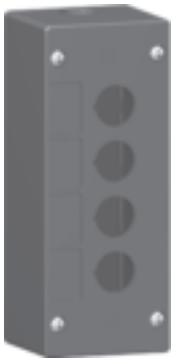

XAL G04

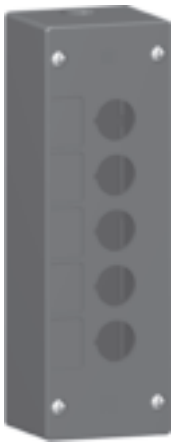

XAL G05

References

Control stations XAL G for severe environments

Description	Number of Ø 22 cut-outs	Reference	Weight kg
Black "RAL 9005" lid and base	1	**XAL G01**	0.226
	2	**XAL G02**	0.280
	3	**XAL G03**	0.333
	4	**XAL G04**	0.331
	5	**XAL G05**	0.382

Self-adhesive legends (19 x 27 mm) for control stations XAL G

Description	Marking	Sold in lots of	Unit reference	Weight kg
Blank legend (colour: grey)	–	10	**ZBY D06102**	0.001
Legends with marking (black marking on grey background)	O	1	**ZBY D06146**	0.001
	I	1	**ZBY D06147**	0.001
	O I	1	**ZBY D06178**	0.001
	EIN	1	**ZBY D06203**	0.001
	AUS	1	**ZBY D06204**	0.001
	AUF	1	**ZBY D06207**	0.001
	AB	1	**ZBY D06208**	0.001
	AUS EIN	1	**ZBY D06266**	0.001
	START	1	**ZBY D06303**	0.001
	STOP	1	**ZBY D06304**	0.001
	ON	1	**ZBY D06311**	0.001
	POWER ON	1	**ZBY D06326**	0.001
	HAND AUTO	1	**ZBY D06364**	0.001
	OFF ON	1	**ZBY D06367**	0.001

Other versions	New control stations with 40 mm between 2 holes. Available 3rd quarter of 2011

Dimensions:
page 2/34

Control stations and enclosures

Plastic control stations XAL G for severe environments

With cut-outs for Ø 22 control and signalling units XB5

Dimensions

XAL G01

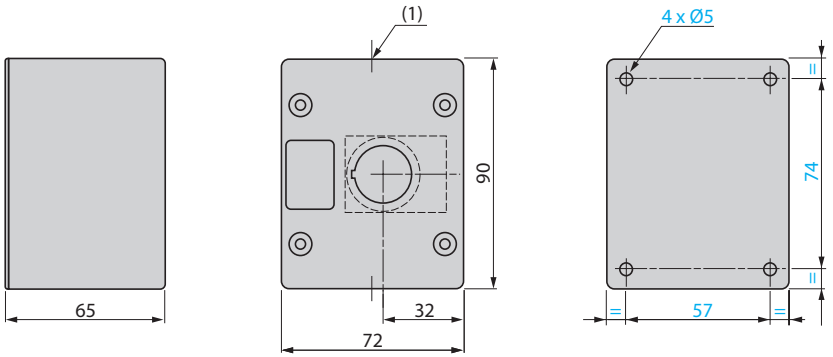

(1) 2 ISO 20 cable entries.

XAL G02

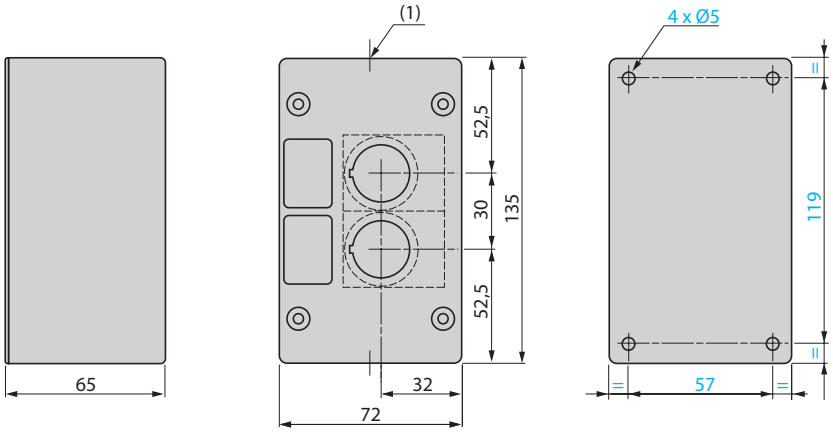

(1) 2 ISO 20 cable entries.

XAL G03

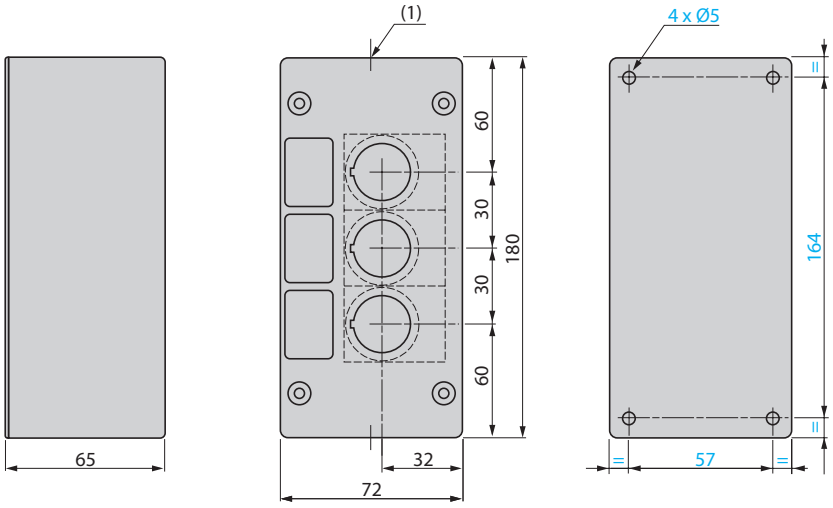

(1) 2 ISO 20 cable entries.

Dimensions

XAL G04

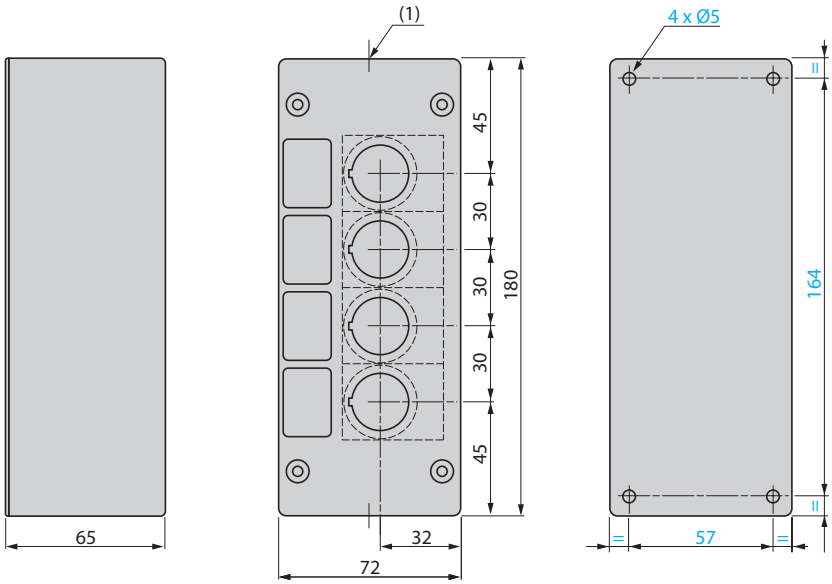

(1) 2 ISO 20 cable entries.

XAL G05

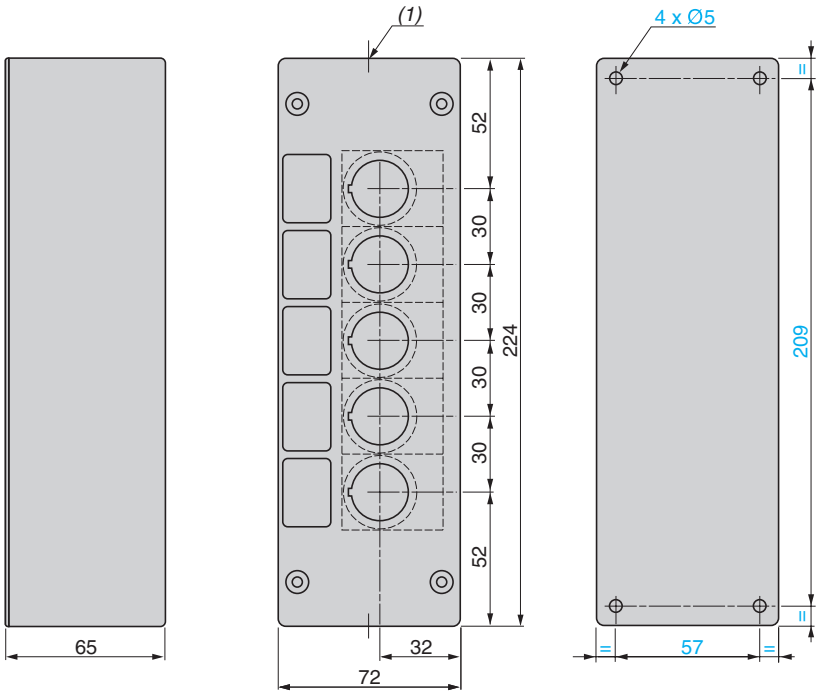

(1) 2 ISO 20 cable entries.

Control stations and enclosures

Plastic control stations XAL E

For Harmony® Ø 22 control and signalling units XB7

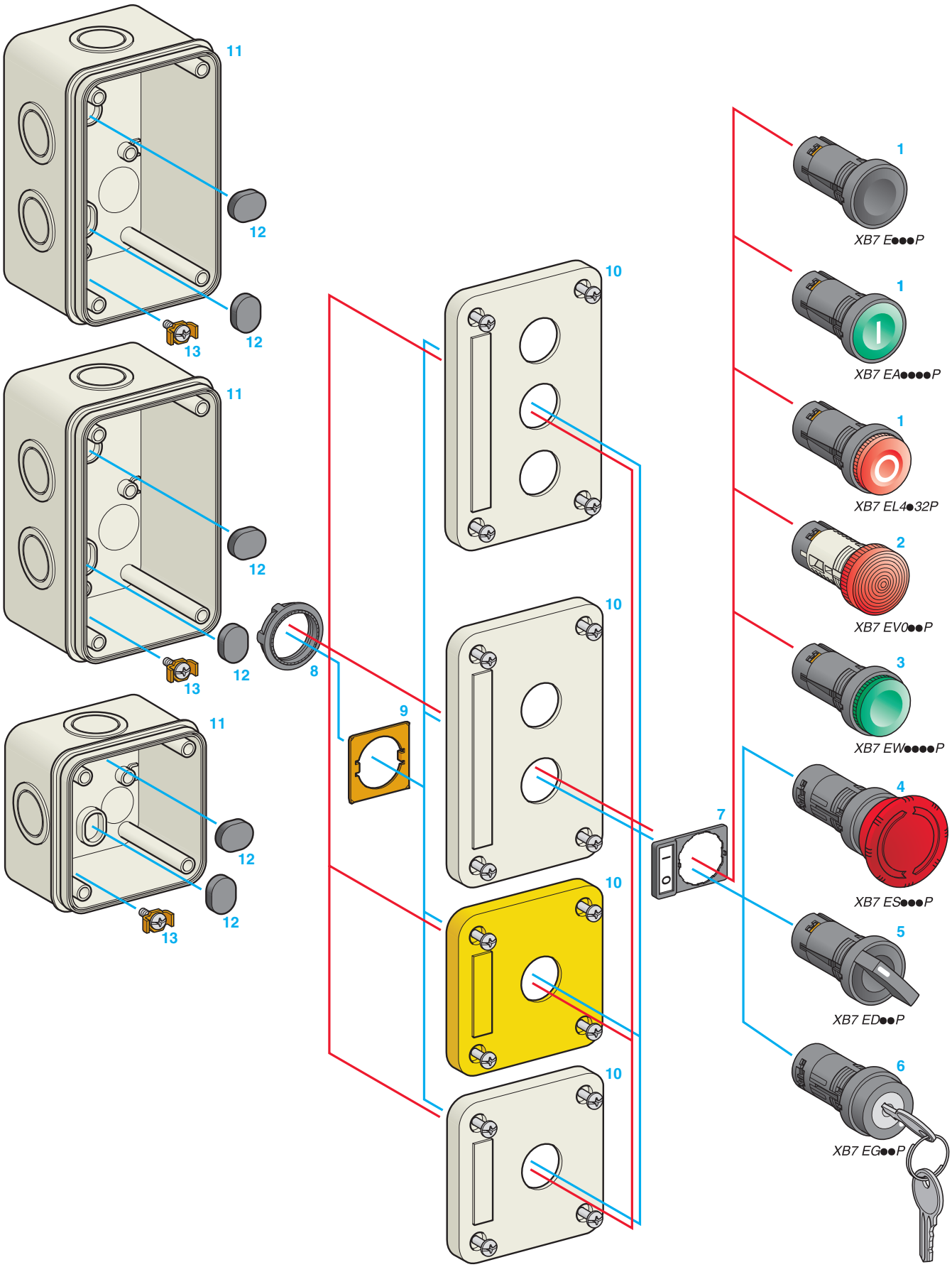

Control stations and enclosures
Plastic control stations XAL E
For Harmony® Ø 22 control and signalling units XB7

Presentation

Control stations XAL E are designed for various applications and predetermined requirements.
□ In buildings, they control garage doors, rolling shutters or smoke extraction vents.
□ In the tertiary sector, they are fitted to simple machines and small lifting systems.
□ In the industrial sector, they are fitted to small machines with 2 or 3 actuators or mass production machines (packaging, materials handling, machine tools, etc.).

Control stations XAL E are available as complete products or as empty enclosures.

Complete stations

■ The complete XAL E control stations are supplied fitted with one, two or three Ø 22 mm control and signalling units from the Harmony® XB7 range *(1)*.
■ The fitted control stations are ready to use. Electrical connections to the mounted units are made by the user.

Complete XAL E control stations meet simple control and/or signalling requirements by factory pre-fitting of:
1 pushbuttons, with or without marking,
2 pilot lights with integral LED,
3 illuminated pushbuttons with integral LED,
4 Emergency stop mushroom head pushbuttons,
5 selector switches with standard handle,
6 key switches,
7 legend holder with legend,
8 fixing nut,
9 anti-rotation plates for selector switches, key switches, Emergency stops and buttons with rotatable marking.

The mounted units are interchangeable: the equipment fitted as standard can be modified in order to meet customised applications.

Empty enclosures

■ The XAL E enclosures supplied empty comprise:
□ a lid 10 with 4 captive fixing screws and a base 11,
□ two fixing screw caps (must be fitted to ensure double isolation and sealing)12.
■ The empty enclosures are available with one, two or three cut-outs of equal diameter.
■ Depending on the needs of the customer, all the catalogue listed Harmony® Ø 22 control and signalling units XB7 (1…6) can be fitted on these empty enclosures for customisation of the product *(1)*.
■ The units are fitted on the lid of the stations. Selector switches, key switches, Emergency stops and buttons with rotatable markings are held in position by an anti-rotation plate 9 *(2)*.
■ Legends and legend holder type ZBY 7 listed in the catalogue complete this customised equipment.

Mounting and fixing

■ Control stations XAL E easily mount on a support using two fixing screws. Two fixing screw caps 12 and a rubber seal *(3)* ensure the sealing and electrical insulation of the installation (IP 54 degree of protection).
■ Control stations XAL E incorporate 4 or 6 ISO 20 knock-outs (depending on the model) to enable cable entry irrespective of the fixing position of the station: horizontal or vertical.
■ A commoning/earth terminal 13 can be mounted in the base of the station if required. To be used in relation to the type of installation *(4)*.

(1) Except pilot lights type XB7 EV8●P supplied via integral transformer.
(2) Included with Harmony® Ø 22 control and signalling units XB7.
(3) Included with complete stations and empty enclosures.
(4) To be ordered separately.

Characteristics: page 2/38
References: page 2/39
Dimensions: page 2/48

Control stations and enclosures
Plastic control stations XAL E
For Harmony® Ø 22 control and signalling units XB7

Environment			
Protective treatment	Standard version		"TC"
Ambient air temperature (around the device)	For storage	**°C**	- 40…+ 70
	For operation	**°C**	- 25…+ 55
Electric shock protection	Conforming to IEC 61140		Class II
Degree of protection	Conforming to IEC 60529		IP 54
Mechanical shock protection	Conforming to EN 50102		IK 05
Conformity to standards			EN/IEC 60947-1, EN/IEC 60947-5-1, EN/IEC 62208, EN/IEC 60947-5-5
Product certifications			CE
Material			ABS
Colours			Light grey "RAL 7035" or yellow "RAL 1021" lid, light grey "RAL 7035" base
Cable entries			ISO 20 knock-out entries
Contact function characteristics			
Type of contact	N/C or N/O or C/O		Slow break
Positive operation	Conforming to EN/IEC 60947-5-1 Appendix K		All functions incorporating a N/C contact are positive opening operation
Short-circuit protection	Conforming to EN/IEC 60947-5-1	**A**	4 (using gG cartridge fuse conforming to IEC 269-1)
Rated insulation voltage	Conforming to EN/IEC 60947-1	**V**	Ui = 250 (degree of pollution 3)
Rated impulse withstand voltage	Conforming to EN/IEC 60947-1	**kV**	Uimp = 4
Rated operational characteristics (conforming to EN/IEC 60947-5-1)	a.c. supply: utilisation category AC14, D300		Ue = 240 V and Ie = 0.3 A or Ue = 120 V and Ie = 0.6 A
	utilisation category DC13, R300		Ue = 250 V and Ie = 0.1 A or Ue = 125 V and Ie = 0.22 A
Electrical reliability	Failure rate in accordance with EN/IEC 60947-5-4		At 17 V and 5 mA: $\lambda \leq 10^{-6}$

Ordinary light function characteristics				
Light source			**LED**	**Incandescent bulb** (all models)
Voltage limits	At nominal voltage	**V**	24 V ⎓: 19.2…30 ⎓; 21.6…26.4 ∿ 120 V ∿: 100…132 ∿ 230-240 V ∿: 195…264 ∿	120 V ∿: 100…132 ∿ 230 V ∿: 195…264 ∿
Consumption	For all colours	**mA**	24 V ⎓: 27 mA max. 120 V ∿: 21 mA max. 230 V ∿: 20 mA max.	Depending on bulb
Service life	At nominal voltage and at an ambient temperature of 25 °C	**H**	80 000	2 000
Electromagnetic emission	Conforming to EN 55011		Class B	

Presentation: page 2/36 References: page 2/39 Dimensions: page 2/48

Control stations and enclosures

Plastic control stations XAL E

For Harmony® Ø 22 control and signalling units XB7

Complete stations



XAL E1011



XAL E1031



XAL E1W1●



XAL E1333



XAL E1441



XAL EK170●

Complete stations

With 1 x Ø 22 control and signalling unit (grey control station lid)

Equipment	Type of push	Type of contact N/O	N/C	C/O	Marking Text (colour)	Reference	Weight kg
1 spring return pushbutton	Flush, green	1	–	–	–	**XAL E1011**	0.100
		2	–	–	–	**XAL E1013**	0.100
		1	–	–	**I** (white)	**XAL E1021**	0.100
		1	–	–	**START** (white)	**XAL E1031**	0.100
	Flush, red	–	1	–	–	**XAL E1112**	0.100
		–	–	1	–	**XAL E1115**	0.100
		–	1	–	**STOP** (white)	**XAL E1142**	0.100
	Projecting, red	–	1	–	**O** (white)	**XAL E1152**	0.100
		–	–	1	**O** (white)	**XAL E1155**	0.100

Equipment	Colour of lens	Type of contact N/O	N/C	C/O	Supply voltage	Reference	Weight kg
1 projecting illuminated spring return pushbutton with integral LED Integral LED	Green	1	–	–	⎓ 24 V	**XAL E1W1B**	0.100
		1	–	–	∿ 230/240 V	**XAL E1W1M**	0.100
	Red	–	1	–	⎓ 24 V	**XAL E1W2B**	0.100
		–	1	–	∿ 230/240 V	**XAL E1W2M**	0.100

Equipment	Number and type of positions	Type of contact N/O	N/C	C/O	Marking Text (colour)	Reference	Weight kg
1 selector switch with standard handle	2 position, stay put	1	–	–	**O I** (white)	**XAL E1341**	0.105
	2 position, stay put	1	1	–	**O I** (white)	**XAL E1345**	0.105
	3 position, stay put	2	–	–	**I O II** (white)	**XAL E1333**	0.105
1 key switch (key n° 455)	2 position, stay put *(1)*	1	–	–	**O I** (white)	**XAL E1441**	0.115

Emergency switching off (yellow control station lid) *(2)*

Equipment	Type of push	Type of contact N/O	N/C	C/O	Reference	Weight kg
1 Emergency switching off pushbutton	Latching, red	–	1	–	**XAL EK1701**	0.110
		1	1	–	**XAL EK1702**	0.110

(1) The symbol " ⚷ " indicates key withdrawal position.

*(2) Mushroom head switching off mechanical latching pushbuttons conform to standards IEC 60364-5-53 and EN/IEC 60947-5-5. Please consult your customer care centre for full details of these standards and directives. For conformity to standard EN/ISO 13850, use control stations **XAL K178●** or **XAL K188●**, see "Control stations **XAL**" offer.*

Control stations and enclosures

Plastic control stations XAL E

For Harmony® Ø 22 control and signalling units XB7

Complete stations



XAL E201●



XAL E222●



XAL E21V1●

Complete stations (continued)

With 2 x Ø 22 control and signalling units (grey control station lid)

Equipment	Type of push	Type of contact			Marking	Reference	Weight
		N/O	N/C	C/O	**Text** (colour)		kg
2 spring return pushbuttons	1 flush, green	1	–	–	–	**XAL E2011**	0.145
	1 flush, red	–	1	–	–		
	1 flush, green	2	–	–	–	**XAL E2015**	0.145
	1 flush, red	–	–	1	–		
	1 flush, green	1	–	–	**START** (white)	**XAL E2151**	0.145
	1 flush, red	–	1	–	**STOP** (white)		
	1 flush, green	1	–	–	**I** (white)	**XAL E2141**	0.145
	1 projecting, red	–	1	–	**O** (white)		
	1 flush, white	1	–	–	➡ (black)	**XAL E2231**	0.145
	1 flush, black	1	–	–	⇦ (white)		
	1 flush, white	–	–	1	➡ (black)	**XAL E2235**	0.145
	1 flush, black	–	–	1	⇦ (white)		
	1 flush, white	1	–	–	⬆ (black)	**XAL E2221**	0.145
	1 flush, black	1	–	–	⇩ (white)		
	1 flush, white	–	–	1	⬆ (black)	**XAL E2225**	0.145
	1 flush, black	–	–	1	⇩ (white)		
1 spring return pushbutton + 1 pilot light with integral LED (⎓ 24 V), green Integral LED	1 flush, green	1	–	–	**I** (white)	**XAL E21V1B**	0.145
	–	–	–	–	–		
1 spring return pushbutton + 1 pilot light with integral LED (∿ 230/240 V), green Integral LED	1 flush, green	1	–	–	**I** (white)	**XAL E21V1M**	0.145
	–	–	–	–	–		

Presentation: page 2/36 Characteristics: page 2/38 Dimensions: page 2/48

Control stations and enclosures

Plastic control stations XAL E

For Harmony® Ø 22 control and signalling units XB7

Complete stations



XAL E33V●●



XAL E325●



XAL E3441

Complete stations (continued)

With 3 x Ø 22 control and signalling units (grey control station lid)

Equipment	Type of push or colour of lens	Type of contact N/O	N/C	C/O	Marking Text (colour)	Reference	Weight kg
2 spring return pushbuttons	1 flush, green	1	–	–	**I** (white)	**XAL E33V2B**	0.170
	1 flush, red	–	1	–	**O** (white)		
+ 1 pilot light with integral LED (≂ 24 V), red Integral LED	–	–	–	–	–		
2 spring return pushbuttons	1 flush, green	1	–	–	**I** (white)	**XAL E33V2M**	0.170
	1 flush, red	–	1	–	**O** (white)		
+ 1 pilot light with integral LED (~ 230/240 V), red Integral LED	–	–	–	–	–		
2 spring return pushbuttons	1 flush, green	1	–	–	**I** (white)	**XAL E33V1B**	0.170
	1 flush, red	–	1	–	**O** (white)		
+ 1 pilot light with integral LED (≂ 24 V), green Integral LED	–	–	–	–	–		
2 spring return pushbuttons	1 flush, green	1	–	–	**I** (white)	**XAL E33V1M**	0.170
	1 flush, red	–	1	–	**O** (white)		
+ 1 pilot light with integral LED (~ 230/240 V), green Integral LED	–	–	–	–	–		
3 spring return pushbuttons	1 flush, white	1	–	–	⬆ (black)	**XAL E3251**	0.170
	1 projecting, red	–	1	–	**O** (white)		
	1 flush, black	1	–	–	⇩ (white)		
	1 flush, white	–	–	1	⬆ (black)	**XAL E3255**	0.170
	1 projecting, red	–	–	1	**O** (white)		
	1 flush, black	–	–	1	⇩ (white)		
	1 flush, green	2	–	–	**I** (white)	**XAL E3405**	0.170
	1 projecting, red	–	–	1	**O** (white)		
	1 flush, green	2	–	–	**II** (white)		
	1 flush, green	1	–	–	**I** (white)	**XAL E3401**	0.170
	1 projecting, red	–	1	–	**O** (white)		
	1 flush, green	1	–	–	**II** (white)		
	1 flush, white	1	–	–	➡ (black)	**XAL E3351**	0.170
	1 projecting, red	–	1	–	**O** (white)		
	1 flush, black	1	–	–	⇦ (white)		
	1 flush, white	–	–	1	➡ (black)	**XAL E3355**	0.170
	1 projecting, red	–	–	1	**O** (white)		
	1 flush, black	–	–	1	⇦ (white)		
1 key switch (key n° 455) (1)	1 black operator (2 position, stay put)	1	–	–	**O I** (white)	**XAL E3441**	0.180
+ 2 spring return pushbuttons	1 flush, white	1	–	–	⬆ (black)		
	1 flush, black	1	–	–	⇩ (white)		

(1) The symbol "⚷" indicates key withdrawal position.

Control stations and enclosures

Plastic control stations XAL E

For Harmony® Ø 22 control and signalling units XB7

Empty control stations



XAL E1



XAL E2



XAL E3



XAL EK1

Empty control stations

For Ø 22 control and signalling units

Description	Number of cut-outs	Sold in lots of	Unit reference	Weight kg
Light grey "RAL 7035" lid and base	1	5	**XAL E1**	0.080
	2	5	**XAL E2**	0.100
	3	5	**XAL E3**	0.100
For Emergency stop mushroom head pushbutton only *(1)*				
Yellow "RAL 1021" lid, light grey "RAL 7035" base	1	5	**XAL EK1**	0.080

*(1) For conformity to standard EN/ISO 13850, use control stations **XAL K178●** or **XAL K188●**, see "Control stations **XAL**" offer.*

Presentation: page 2/36 Characteristics: page 2/38 Dimensions: page 2/48

Control stations and enclosures

Plastic control stations XAL E

For Harmony® Ø 22 control and signalling units XB7

Separate components



XB7 EA●1P



XB7 EL4●P



XB7 EA3133P



XB7 EA1●341P



XB7 EA2●343P

Pushbuttons

Shape of head	Type of push	Type of contact N/O	N/C	C/O	Marking Text	Colour	Colour of push	Sold in lots of	Unit reference	Weight kg
Spring return pushbuttons without marking										
	Flush	1	–	–	–	–	White	10	**XB7 EA11P** *(1)*	0.020
		–	–	1				10	**XB7 EA15P** *(1)*	0.020
		1	–	–	–	–	Black	10	**XB7 EA21P** *(1)*	0.020
		2	–	–				10	**XB7 EA23P** *(1)*	0.020
		–	–	1				10	**XB7 EA25P** *(1)*	0.020
		1	–	–	–	–	Green	10	**XB7 EA31P** *(1)*	0.020
		2	–	–				10	**XB7 EA33P** *(1)*	0.020
		–	–	1				10	**XB7 EA35P** *(1)*	0.020
		–	1	–	–	–	Red	10	**XB7 EA42P** *(1)*	0.020
		–	–	1				10	**XB7 EA45P** *(1)*	0.020
		1	–	–	–	–	Yellow	10	**XB7 EA51P** *(1)*	0.020
	Projecting	–	1	–	–	–	Red	10	**XB7 EL42P** *(1)*	0.020
Spring return pushbuttons with marking										
I	**Flush**	1	–	–	I	White	Green	10	**XB7 EA3131P** *(1)*	0.020
		2	–	–				10	**XB7 EA3331P** *(1)*	0.020
START		1	–	–	START	White	Green	10	**XB7 EA3133P** *(1)*	0.020
		2	–	–				10	**XB7 EA3333P** *(1)*	0.020
MARCHE		1	–	–	MARCHE	White	Green	10	**XB7 EA3142P** *(1)*	0.020
		2	–	–				10	**XB7 EA3342P** *(1)*	0.020
O		–	1	–	O	White	Red	10	**XB7 EA4232P** *(1)*	0.020
		–	–	1				10	**XB7 EA4532P** *(1)*	0.020
STOP		–	1	–	STOP	White	Red	10	**XB7 EA4234P** *(1)*	0.020
		–	–	1				10	**XB7 EA4534P** *(1)*	0.020
↑		1	–	–	↑	Black	White	10	**XB7 EA11341P** *(1)*	0.020
		–	–	1				10	**XB7 EA15341P** *(1)*	0.020
↓		1	–	–	⇩	White	Black	10	**XB7 EA21343P** *(1)*	0.020
		–	–	1				10	**XB7 EA25343P** *(1)*	0.020
O	**Projecting**	–	1	–	O	White	Red	10	**XB7 EL4232P** *(1)*	0.020
		–	–	1				10	**XB7 EL4532P** *(1)*	0.020
STOP		–	1	–	STOP	White	Red	10	**XB7 EL4234P** *(1)*	0.020
		–	–	1				10	**XB7 EL4534P** *(1)*	0.020
ARRET		–	1	–	ARRET	White	Red	10	**XB7 EL4233P** *(1)*	0.020
		–	–	1				10	**XB7 EL4533P** *(1)*	0.020

*(1) For Faston connection version (1 x 6.35 mm and 2 x 2.8 mm), add the number "**3**" to the end of the reference.*
*Example: **XB7 EA21P** becomes **XB7 EA21P3**.*

Control stations and enclosures

Plastic control stations XAL E

For Harmony® Ø 22 control and signalling units XB7

Separate components (continued)



XB7 EA●1P

Pushbuttons (continued)

Shape of head	Type of push	Type of contact N/O	N/C	C/O	Marking Text	Colour	Colour of push	Sold in lots of	Unit reference	Weight kg
Push and push-to release pushbuttons without marking										
	**Flush**	1	–	–	–	–	Black	10	**XB7 EH21P**	0.020
					–	–	Green	10	**XB7 EH31P**	0.020
		–	–	1	–	–	Black	10	**XB7 EH25P**	0.020
					–	–	Green	10	**XB7 EH35P**	0.020



XB7 ED21P

Selector/key switches

Shape of head	Type of operator	Type of contact N/O	N/C	C/O	Number and type of positions (2)		Sold in lots of	Unit reference	Weight kg
	**Standard handle, black**	1	–	–	2, stay put		10	**XB7 ED21P** (1)	0.025
		1	1	–	2, stay put		10	**XB7 ED25P**	0.025
		2	–	–	3, stay put		10	**XB7 ED33P**	0.025
	**Key** (key n° 455)	1	–	–	2, key withdrawal in LH position		10	**XB7 EG21P**	0.049
		2	–	–	3, key withdrawal in centre position		10	**XB7 EG33P**	0.049



XB7 EG33P

Ø 40 mm Emergency switching off mushroom head pushbuttons (3)

Shape of head	Type of push	Type of contact N/O	N/C	C/O	Colour of push	Sold in lots of	Unit reference	Weight kg
	**Turn to release**	–	1	–	Red	10	**XB7 ES542P**	0.032
		1	1	–	Red	10	**XB7 ES545P**	0.035
	Key release (n° 455)	–	1	–	Red	10	**XB7 ES142P**	0.055
		1	1	–	Red	10	**XB7 ES145P**	0.058



XB7 ES542P

*(1) For Faston connection version (1 x 6.35 mm and 2 x 2.8 mm), add the number "**3**" to the end of the reference.*
*Example : **XB7 ED21P** becomes **XB7 ED21P3**.*
(2) The symbol "⚷" indicates key withdrawal position.
(3) Mushroom head switching off mechanical latching pushbuttons are conform to standards IEC 60364-5-53 and EN/IEC 60947-5-5.
For mushroom head Emergency stop trigger action and mechanical latching pushbuttons conforming to standards EN/IEC 60204-1 and EN/ISO 13850, to Machinery Directive 98/37/EC and to standard EN/IEC 60947-5-5, use an XB5 A●8●●● or XB5 AS9●●● from the Harmony range.

Presentation: page 2/36 Characteristics: page 2/38 Dimensions: page 2/48

Control stations and enclosures

Plastic control stations XAL E

For Harmony® Ø 22 control and signalling units XB7

Separate components (continued)



XB7 EV0●●P

Pilot lights with integral LED ("true" colours)

Shape of head	Supply voltage V	Colour of lens	Sold in lots of	Unit reference	Weight kg
Integral LED	⎓ 24 50-60 Hz	White	10	**XB7 EV01BP** *(1)*	0.020
		Green	10	**XB7 EV03BP** *(1)*	0.020
		Red	10	**XB7 EV04BP** *(1)*	0.020
		Yellow	10	**XB7 EV05BP** *(1)*	0.020
		Blue	10	**XB7 EV06BP** *(1)*	0.020
		Orange	10	**XB7 EV08BP** *(1)*	0.020
	~ 120 50-60 Hz	White	10	**XB7 EV01GP** *(1)*	0.020
		Green	10	**XB7 EV03GP** *(1)*	0.020
		Red	10	**XB7 EV04GP** *(1)*	0.020
		Yellow	10	**XB7 EV05GP** *(1)*	0.020
		Blue	10	**XB7 EV06GP** *(1)*	0.020
		Orange	10	**XB7 EV08GP** *(1)*	0.020
	~ 230-240 50-60 Hz	White	10	**XB7 EV01MP** *(1)*	0.020
		Green	10	**XB7 EV03MP** *(1)*	0.020
		Red	10	**XB7 EV04MP** *(1)*	0.020
		Yellow	10	**XB7 EV05MP** *(1)*	0.020
		Blue	10	**XB7 EV06MP** *(1)*	0.020
		Orange	10	**XB7 EV08MP** *(1)*	0.020



XB7 EW3●●●P

Illuminated pushbuttons with integral LED ("true" colours)

Shape of head	Type of push	Supply voltage V	Type of contact N/O	Type of contact N/C	Colour of lens	Sold in lots of	Unit reference	Weight kg
Spring return illuminated pushbuttons								
Integral LED	**Projecting**	⎓ 24	1	–	Green	10	**XB7 EW33B1P**	0.022
					Red	10	**XB7 EW34B1P**	0.022
					Yellow	10	**XB7 EW35B1P**	0.022
			–	1	Red	10	**XB7 EW34B2P**	0.022
		~ 230 50-60 Hz	1	–	Green	10	**XB7 EW33M1P**	0.022
					Red	10	**XB7 EW34M1P**	0.022
					Yellow	10	**XB7 EW35M1P**	0.022
			–	1	Red	10	**XB7 EW34M2P**	0.022
Push and push-to-release illuminated buttons								
Integral LED	**Projecting**	⎓ 24	1	–	Green	10	**XB7 EH03B1P**	0.022
					Red	10	**XB7 EH04B1P**	0.022
					Yellow	10	**XB7 EH05B1P**	0.022
			–	1	Red	10	**XB7 EH04B2P**	0.022
		~ 230 50-60 Hz	1	–	Green	10	**XB7 EH03M1P**	0.022
					Red	10	**XB7 EH04M1P**	0.022
					Yellow	10	**XB7 EH05M1P**	0.022
			–	1	Red	10	**XB7 EH04M2P**	0.022



XB7 EH0●●●P

*(1) For Faston connection version (1 x 6.35 mm and 2 x 2.8 mm), add the number "**3**" to the end of the reference.*
*Example: **XB7 EV01BP** becomes **XB7 EV01BP3**.*

Control stations and enclosures
Plastic control stations XAL E
For Harmony® Ø 22 control and signalling units XB7
Separate components (continued)



XB7 EV●●P

Pilot lights with BA 9s base fitting

Shape of head	Supply	Description	Supply voltage V	Colour of lens	Sold in lots of	Unit reference	Weight kg
	Direct *(2)*	For incandescent bulb (not included) *(2)* BA 9s base fitting	≤ 250	White	10	**XB7 EV61P** *(1)*	0.018
				Green	10	**XB7 EV63P** *(1)*	0.018
				Red	10	**XB7 EV64P** *(1)*	0.018
				Yellow	10	**XB7 EV65P** *(1)*	0.018
				Blue	10	**XB7 EV66P** *(1)*	0.018
				Orange	10	**XB7 EV68P** *(1)*	0.018
	Direct, through resistor	With incandescent bulb 130 V - 2.6 W included BA 9s base fitting	∼ 230 50/60 Hz	White	10	**XB7 EV71P** *(1)*	0.020
				Green	10	**XB7 EV73P** *(1)*	0.020
				Red	10	**XB7 EV74P** *(1)*	0.020
				Yellow	10	**XB7 EV75P** *(1)*	0.020
				Blue	10	**XB7 EV76P** *(1)*	0.020
				Orange	10	**XB7 EV78P** *(1)*	0.020
		For 130 V - 2.6 W bulb (not included) *(2)* BA 9s base fitting	∼ 230 50/60 Hz	White	10	**XB7 EV710P** *(1)*	0.020
				Green	10	**XB7 EV730P** *(1)*	0.020
				Red	10	**XB7 EV740P** *(1)*	0.020
				Yellow	10	**XB7 EV750P** *(1)*	0.020
				Blue	10	**XB7 EV760P** *(1)*	0.020



XB7 EW3●●1P



XB7 EH0●●1P

Illuminated pushbuttons with BA 9s base fitting, projecting push

Shape of head	Supply	Type of contact N/O	Type of contact N/C	Supply voltage V	Colour of lens	Sold in lots of	Unit reference	Weight kg
Spring return illuminated pushbuttons								
	Direct with BA 9s base fitting neon bulb included	1	–	∼ 230	Green	10	**XB7 EW3341P**	0.022
					Red	10	**XB7 EW3441P**	0.022
					Yellow	10	**XB7 EW3541P**	0.022
	Direct for incandescent BA 9s bulb (not included) *(3)*	1	–	⩽ 250	Green	10	**XB7 EW3361P**	0.020
					Red	10	**XB7 EW3461P**	0.020
					Yellow	10	**XB7 EW3561P**	0.020
Push and push-to-release illuminated buttons								
	Direct with BA 9s base fitting neon bulb included	1	–	∼ 230	Green	10	**XB7 EH0341P**	0.022
					Red	10	**XB7 EH0441P**	0.022
					Yellow	10	**XB7 EH0541P**	0.022
	Direct for incandescent BA 9s bulb (not included) *(3)*	1	–	⩽ 250	Green	10	**XB7 EH0361P**	0.020
					Red	10	**XB7 EH0461P**	0.020
					Yellow	10	**XB7 EH0561P**	0.020

*(1) For Faston connection version (1 x 6.35 mm and 2 x 2.8 mm), add the number "**3**" to the end of the reference.*
*Example: **XB7 EV61P** becomes **XB7 EV61P3**.*
(2) Bulb characteristics for direct supply pilot lights: 250 V max., 2.6 W max.
(3) Bulb characteristics for direct supply illuminated pushbuttons: 250 V max., 1.2 W max.

Presentation: page 2/36 Characteristics: page 2/38 Dimensions: page 2/48

Control stations and enclosures

Plastic control stations XAL E

For Harmony® Ø 22 control and signalling units XB7

Separate components (continued) and accessories

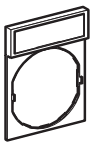

ZBY 2101

Legend holder, 30 x 40 mm with legend (black or red background)

With blank legend

Text	Sold in lots of	Unit reference	Weight kg
Without	**10**	**ZBY 2101**	0.001

With marked legend (sold singly)

- Start functions: white characters on black background.
- Stop functions: white characters on red background.

Text	Unit reference	Weight kg	Text	Unit reference	Weight kg
Auto	**ZBY 2115**	0.001	Reset	**ZBY 2323**	0.001
Down	**ZBY 2308**	0.001	Reverse	**ZBY 2306**	0.001
Forward	**ZBY 2305**	0.001	Right	**ZBY 2309**	0.001
Hand	**ZBY 2316**	0.001	Start	**ZBY 2303**	0.001
Inch	**ZBY 2321**	0.001	Stop	**ZBY 2304**	0.001
Left	**ZBY 2310**	0.001	Up	**ZBY 2307**	0.001
Off	**ZBY 2312**	0.001	O	**ZBY 2146**	0.001
On	**ZBY 2311**	0.001	I	**ZBY 2147**	0.001
Power on	**ZBY 2326**	0.001	O-I	**ZBY 2178**	0.001



ZBY 9330

Circular legends for Emergency stop mushroom head pushbuttons

Diameter mm	Colour	Marking on yellow background	Unit reference	Weight kg
60	Yellow	–	**ZBY 9101**	0.004
		EMERGENCY STOP	**ZBY 9330**	0.004
		ARRET D'URGENCE	**ZBY 9130**	0.004
		NOT-AUS	**ZBY 9230**	0.004
		PARADA DE EMERGENCIA	**ZBY 9430**	0.004
		ARRESTO EMERGENZA	**ZBY 9630**	0.004



ZB5 AZ901

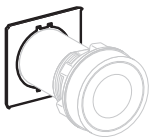

ZB5 AZ902

Accessories

Description	Colour	Sold in lots of	Unit reference	Weight kg
Anti-rotation plate	–	**10**	**ZB5 AZ902**	0.008
Fixing nut	–	**10**	**ZB5 AZ901**	0.002
Fixing nut tightening tool	–	**1**	**ZB5 AZ905**	0.016
Grooved lenses for BA 9s pilot lights	White	**10**	**ZB7 EV01**	0.002
	Green	**10**	**ZB7 EV03**	0.002
	Red	**10**	**ZB7 EV04**	0.002
	Yellow	**10**	**ZB7 EV05**	0.002
	Blue	**10**	**ZB7 EV06**	0.002
	Clear	**10**	**ZB7 EV07**	0.002
	Orange	**10**	**ZB7 EV08**	0.002

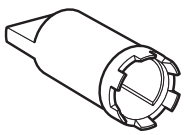

ZB5 AZ905

Bulbs

Description	Voltage	Power	Colour	Sold in lots of	Unit reference	Weight
	V	W				kg
Incandescent bulbs, long life BA 9s base fitting Ø 11 mm max. length 28 mm max.	6	1.2	–	**10**	**DL1 CB006**	0.002
	24	2.0	–	**10**	**DL1 CE024**	0.002
	130	2.6	–	**10**	**DL1 CE130**	0.002
Neon bulbs BA 9s base fitting Ø 11 mm max. length 28 mm max.	220…240	–	Green	**10**	**DL1 CS3220**	0.002
			Blue	**10**	**DL1 CS6220**	0.002
			Orange *(1)*	**10**	**DL1 CS7220**	0.002



DL1 CE●●●



DL1 CS●●●●

(1) For use with red, yellow or clear pilot light.

Control stations and enclosures

Plastic control stations XAL E

For Harmony® Ø 22 control and signalling units XB7

Control stations with 1 x Ø 22 control and signalling unit

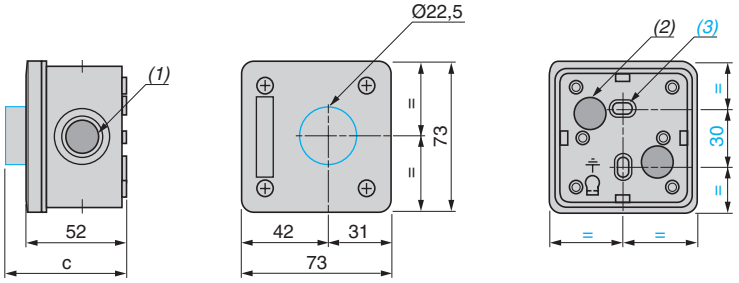

Control station XAL E fitted with:	c
Flush pushbutton	61
Projecting pushbutton	63
Illuminated pushbutton	66.5
Pilot light	63
Emergency stop without key	81.5
Selector switch with standard handle	76.5
Key switch	92

(1) 4 ISO 20 knock-outs.
(2) 2 knock-outs for cable entry, maximum capacity 16 mm.
(3) 2 knock-out elongated fixing holes Ø 3 x 5.

Control stations with 2 x Ø 22 control and signalling units

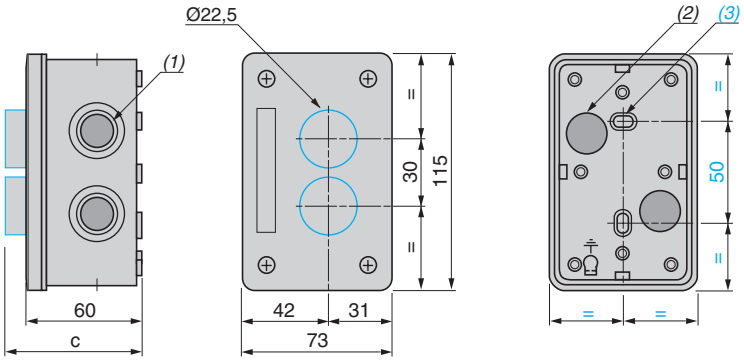

Control station XAL E fitted with:	c
Flush pushbutton	69
Projecting pushbutton	71
Illuminated pushbutton	74.5
Pilot light	71
Emergency stop without key	89.5
Selector switch with standard handle	84.5
Key switch	100

(1) 6 ISO 20 knock-outs.
(2) 2 knock-outs for cable entry, maximum capacity 20 mm.
(3) 2 knock-out elongated fixing holes Ø 3 x 5.

Control stations with 3 x Ø 22 control and signalling units

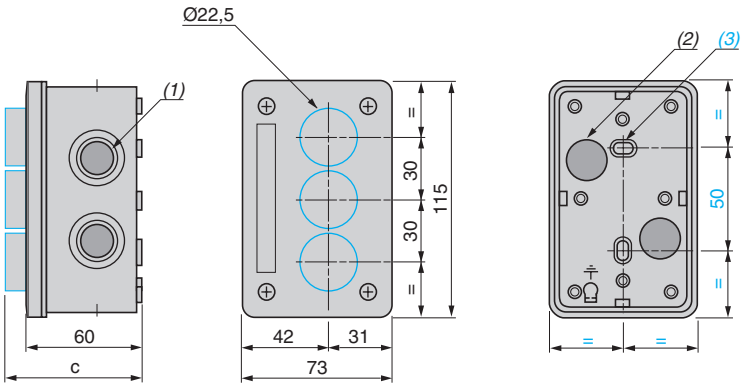

Control station XAL E fitted with:	c
Flush pushbutton	69
Projecting pushbutton	71
Illuminated pushbutton	74.5
Pilot light	71
Emergency stop without key	89.5
Selector switch with standard handle	84.5
Key switch	100

(1) 6 ISO 20 knock-outs.
(2) 2 knock-outs for cable entry, maximum capacity 20 mm.
(3) 2 knock-out elongated fixing holes Ø 3 x 5.

Presentation: page 2/36
Characteristics: page 2/38
References: page 2/39

Control stations and enclosures
Plastic control stations XAL E
For Harmony® Ø 22 control and signalling units XB7

Harmony® Ø 22 control and signalling units XB7

XB7 EA●●P, XB7 EH●●P

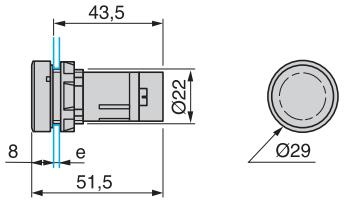

XB7 ED●●P

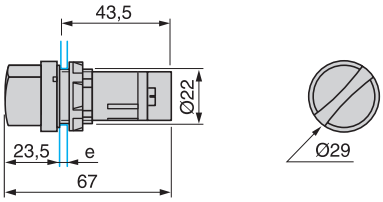

XB7 EG●●P

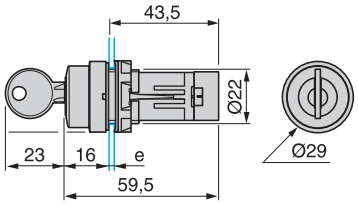

e: support panel thickness = 1 to 6 mm.

XB7 ES5●●P

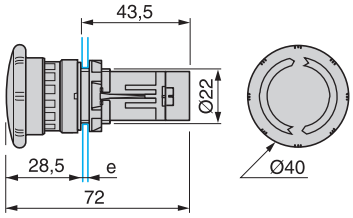

XB7 ES1●●P

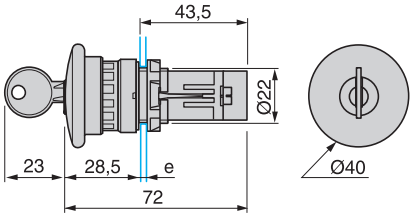

XB7 EV●●●P

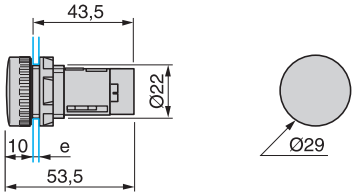

e: support panel thickness = 1 to 6 mm.

XB7 EW3●●●P, XB7 EH0●●●P

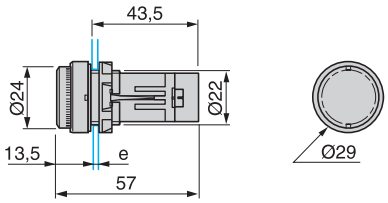

XB7 EL4●32P

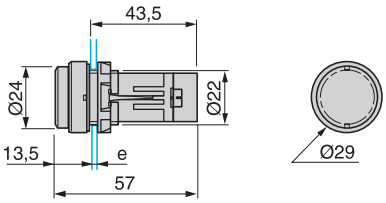

e: support panel thickness = 1 to 6 mm.

Faston clip connection

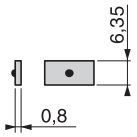

"U" type tag connection

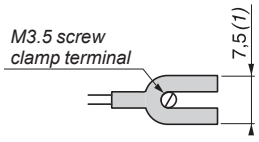

(1) Minimum value.

Mounting

Diameter of finished fixing holes

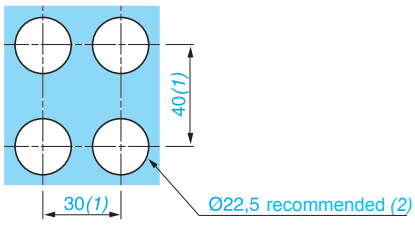

(1) Minimum value.
(2) Standard value: Ø 22.3 (0; + 0.4).

Control stations and enclosures
Polyester, metal and flush mounting enclosures
Undrilled or with cut-outs for Ø 22 control and signalling units

Insulated enclosures XAP A, glass-reinforced polyester

Material and colour			Glass-reinforced polyester, coloured grey throughout
Product certifications	Special version		CSA ENCLOSURE 4 and 5
Protective treatment	Standard version		"TC" and "TH"
Ambient air temperature	For operation	**°C**	- 25…+ 70
	For storage	**°C**	- 40…+ 70
Degree of protection	Conforming to IEC 60529		IP 65
Electric shock protection	Conforming to IEC 61140		Class II
Flame resistance			CSTB: M3, NF C 20-455: 850 °C, IEC 92: 960 °C, UL 94: VO
Resistance to chemical agents			Highly resistant to acids, bases, sea water, mineral salts, all solvents, petrol, diesel, oils and greases
Cable entries			Undrilled

Die-cast metal enclosures XAP M and XAP J

Material and colour			**XAP M1, M2, M3 and M4**: zinc alloy. Blue paint finish **XAP M5**: aluminium alloy. Blue paint finish **XAP J**: zinc alloy. Yellow lid and blue base
Product certifications	Special version		CSA ENCLOSURE 4 and 5, UL ENCLOSURE 1, 3, 4 and 12K
Protective treatment	Standard version		"TC"
	Special version		"TH"
Ambient air temperature	For operation	**°C**	- 25…+ 70
	For storage	**°C**	- 40…+ 70
Degree of protection	Conforming to IEC 60529		IP 65
Electric shock protection	Conforming to IEC 61140		Class I
Resistance to chemical agents			Special treatments on request
Cable entries			Tapped entries for cable gland (see dimensions, page 2/55)

References:
page 2/52

Dimensions:
page 2/55

Metal enclosures XB2 SL

Material and colour			Aluminium alloy or sheet steel. Blue paint finish
Protective treatment	Standard version		"TC"
	Special version		"TH"
Ambient air temperature	For operation	**°C**	- 25…+ 70
	For storage	**°C**	- 40…+ 70
Degree of protection	Conforming to IEC 60529		IP 54
Electric shock protection	Conforming to IEC 61140		Class I
Resistance to chemical agents			Special treatments on request
Cable entries	**XB2 S** in aluminium alloy		Tapped entries for cable gland (see dimensions, page 2/55)
	XB2 S in sheet steel		Undrilled

Flush mounting enclosures XAP E

Material and colour			Anodised aluminium front plate. Insulated protective rear cover
Protective treatment	Standard version		"TC" and "TH"
Ambient air temperature	For operation	**°C**	- 25…+ 70
	For storage	**°C**	- 40…+ 70
Degree of protection	Conforming to IEC 60529		IP 65
Electric shock protection	Conforming to IEC 61140		Class I
Resistance to chemical agents			Good resistance to organic acids, diluted mineral acids, salts, alcohol, acetone, chloride and fluoride solvents, oils and petrol
Cable entries			Through rear cover: knock-out cable entries

Control stations and enclosures

Polyester enclosures XAP A

Undrilled or with cut-outs for Ø 22 control and signalling units



XAP A1104



XAP A2108

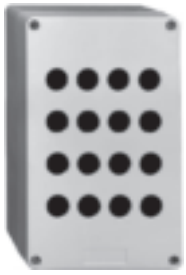

XAP A3116

Insulated enclosures XAP A, glass-reinforced polyester

Description	Front face dimensions mm	Number of cut-outs	Number of rows		Reference	Weight kg
			Vertical	Horizontal		
Without hinges Usable depth 83 mm	85 x 146	1	1	1	**XAP A1110**	0.470
		2	1	2	**XAP A1120**	0.450
		4	2	2	**XAP A1104**	0.460
	85 x 226	8	2	4	**XAP A2108**	0.580
	151 x 241	16	4	4	**XAP A3116**	0.820
With hinges Usable depth 83 mm	151 x 241	16	4	4	**XAP A4116**	0.850
Earthing plates sheet steel with earth screw	For XAP A1110				**XAP Z110**	0.080
	For XAP A1120				**XAP Z120**	0.070
	For XAP A1104				**XAP Z104**	0.070
	For XAP A2108				**XAP Z208**	0.110
	For XAP A3116 and A4116				**XAP Z316**	0.160



XAP A1100



XAP A2100



XAP A3100

Insulated enclosures XAP A, glass-reinforced polyester, undrilled

Description	Front face dimensions mm		Reference	Weight kg
Without hinges Usable depth 83 mm	85 x 146		**XAP A1100**	0.470
	85 x 226		**XAP A2100**	0.600
	151 x 241		**XAP A3100**	0.860
With hinges Usable depth 83 mm	151 x 241		**XAP A4100**	0.890
Earthing plates with earth screw	For XAP A1100	–	**XAP Z100**	0.080
	For XAP A2100	–	**XAP Z200**	0.130
	For XAP A3100 and A4100	–	**XAP Z300**	0.200
Other versions	Enclosures with cut-outs for Ø 30 control and signalling units. Enclosures pre-fitted with Ø 22 units. Please consult your customer care centre.			

Characteristics: page 2/50

Dimensions: page 2/55

Control stations and enclosures

Metal control stations XAP M and XAP J

Undrilled or with cut-outs for Ø 22 control and signalling units



XAP M1202



XAP M2203



XAP M2504



XAP M4508

Die-cast metal enclosures XAP M (blue lid and base)

Description	Front face dimensions mm	Number of cut-outs	Number of rows		Reference	Weight
			Vertical	Horizontal		kg
Zinc alloy Usable depth 49 mm	80 x 80	1	1	1	**XAP M1201**	0.455
		2	2	1	**XAP M1202**	0.450
	80 x 130	2	1	2	**XAP M2202**	0.610
		3	1	3	**XAP M2203**	0.605
		4	2	2	**XAP M2204**	0.600
	80 x 175	3	1	3	**XAP M3203**	0.870
		4	1	4	**XAP M3204**	0.880
		6	2	3	**XAP M3206**	0.870
Zinc alloy Usable depth 74.5 mm	80 x 80	1	1	1	**XAP M1501**	0.605
		2	2	1	**XAP M1502**	0.600
	80 x 130	2	1	2	**XAP M2502**	0.810
		3	1	3	**XAP M2503**	0.815
		4	2	2	**XAP M2504**	0.810
	80 x 175	3	1	3	**XAP M3503**	1.145
		4	1	4	**XAP M3504**	1.140
		6	2	3	**XAP M3506**	1.130
	80 x 220	6	1	6	**XAP M4506**	1.380
		8	2	4	**XAP M4508**	1.370
Aluminium Usable depth 74.5 mm	85 x 310	8	1	8	**XAP M5508**	0.810
		12	2	6	**XAP M5512**	0.790

Die-cast metal enclosures XAP J (yellow lid, blue base)

Zinc alloy Usable depth 49 mm	80 x 80	1	1	1	**XAP J1201**	0.455
Zinc alloy Usable depth 74.5 mm	80 x 80	1	1	1	**XAP J1501**	0.605



XAP M11



XAP M31

Die-cast metal enclosures XAP M and XAP J, undrilled

Description	Material	Front face dimensions mm	Reference	Weight
Blue lid and base	Zinc alloy Usable depth 49 mm	80 x 80	**XAP M11**	0.460
		80 x 130	**XAP M21**	0.620
		80 x 175	**XAP M31**	0.900
	Zinc alloy Usable depth 74.5 mm	80 x 80	**XAP M14**	0.610
		80 x 130	**XAP M24**	0.830
		80 x 175	**XAP M34**	1.160
		80 x 220	**XAP M44**	1.410
	Aluminium Usable depth 74.5 mm	85 x 310	**XAP M54**	0.850
Yellow lid, blue base	Zinc alloy Usable depth 49 mm	80 x 80	**XAP J11**	0.460
	Zinc alloy Usable depth 74.5 mm	80 x 80	**XAP J14**	0.610
		80 x 80	**XAP J34**	1.160

Other versions

Enclosures with cut-outs for Ø 30 control and signalling units.
Enclosures pre-fitted with Ø 22 units.
Die-cast metal enclosures XAPM with ISO cable entries (H29 version).
Die-cast metal enclosures XAPM with UL/CSA certification (H7 version).
Please consult your customer care centre.

Control stations and enclosures
Metal control stations XB2 SL
Flush mounting control stations XAP E
With cut-outs for Ø 22 control and signalling units



XB2 SL64007

Sheet steel enclosures XB2 SL

Description	Front face dimensions mm	Number of cut-outs	Number of rows		Reference	Weight kg
			Vertical	Horizontal		
Sheet steel Usable depth 115 mm	200 x 200	8	4	2	**XB2 SL42007**	3.100
	200 x 260	16	4	4	**XB2 SL44007**	3.900
	260 x 260	24	6	4	**XB2 SL64007**	4.700
	260 x 320	30	6	5	**XB2 SL65007**	5.500
	320 x 320	40	8	5	**XB2 SL85007**	6.200



XB2 SL42009

Die-cast metal enclosures XB2 SL (blue lid and base)

Description	Front face dimensions mm	Number of cut-outs	Number of rows		Reference	Weight kg
			Vertical	Horizontal		
Aluminium Usable depth 78 mm	150 x 150	6	3	2	**XB2 SL32009**	0.970
		8	4	2	**XB2 SL42009**	0.960

Flush mounting enclosures XAP E

Description	Material	Number of cut-outs	Front face dimensions mm	Reference	Weight kg
Front plates with fixing screws	Aluminium, anodised	1	72 x 72	**XAP E301**	0.050
		2	72 x 105	**XAP E302**	0.075
		3	72 x 138	**XAP E303**	0.095
		4	72 x 171	**XAP E304**	0.115
		5	72 x 204	**XAP E305**	0.135
Protective rear covers	Insulated	For front plate XAP E301		**XAP E901**	0.040
		For front plate XAP E302		**XAP E902**	0.050
		For front plate XAP E303		**XAP E903**	0.060
		For front plate XAP E304		**XAP E904**	0.070
		For front plate XAP E305		**XAP E905**	0.080



XAP E301



XAP E302



XAP E303



XAP E305

Accessories

Description	For use with	Colour	Sold in lots of	Unit reference	Weight kg
Metal circular blanking plug	Ø 22 control and signalling units XB4, metal	Chromium plated	10	**ZB4 SZ3**	0.023
		Black	10	**ZB4 SZ37**	0.023
Plastic square blanking plug (with fixing nut)	Ø 22 control and signalling units XB5, plastic	Black	10	**ZB5 SZ5**	0.009
Plastic circular blanking plug (with fixing nut)	Ø 22 control and signalling units XB5, plastic	Black	10	**ZB5 SZ3**	0.009
Other versions	Enclosures with cut-outs for Ø 30 control and signalling units. Enclosures pre-fitted with Ø 22 units. Please consult your customer care centre.				



ZB5 SZ3

Characteristics: page 2/50

Dimensions: page 2/55

Control stations and enclosures

Polyester control stations XAP A

Undrilled or with cut-outs for Ø 22 control and signalling units

Insulated enclosures XAP A with cut-outs

XAP A

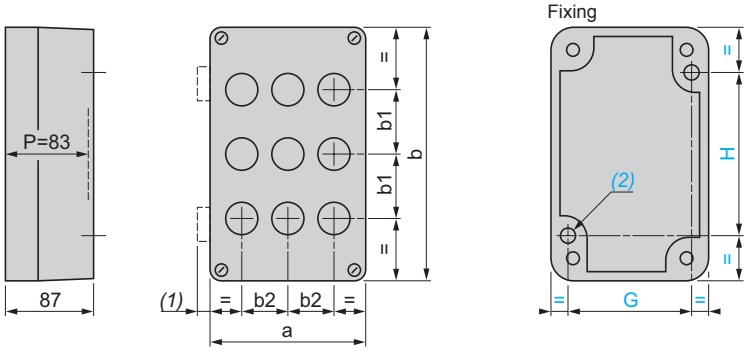

XAP	a	b	b1	b2	G	H
A1110	85	146	–	–	70	105
A1120	85	146	40	–	70	105
A1104	85	146	40	30	70	105
A2108	85	226	40	30	70	180
A3116, A4116	151	241	40	30	135	200

Drill cable entries to suit.

(1) 11 mm for XAP A4●●● enclosures with hinges.

(2) 2 x Ø 5.6 holes, depth 12.

P = Usable depth

Insulated enclosures XAP A, undrilled

XAP A1100, XAP A2100

XAP A3100, XAP A4100

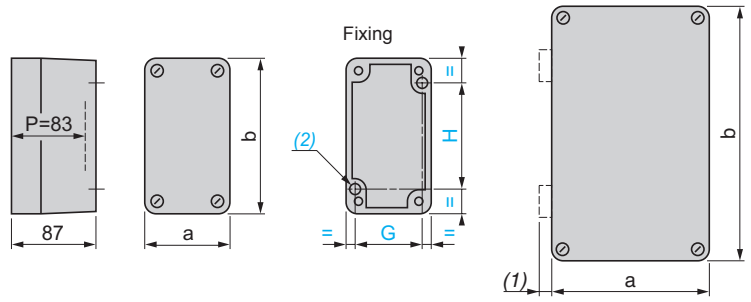

XAP	a	b	G	H
A1110	85	146	70	105
A2100	85	226	70	180
A3100	151	241	135	200
A4100	151	241	135	200

Drill cable entries to suit.

(1) 11 mm for XAP A4●●● enclosures with hinges.

(2) 2 x Ø 5.6 holes, depth 12.

P = Usable depth

Control stations and enclosures

Metal control stations XAP M and XAP J
Metal control stations XB2 SL

Undrilled or with cut-outs for Ø 22 control and signalling units

Die-cast metal enclosures XAP M and XAP J, with cut-outs

XAP J, XAP M

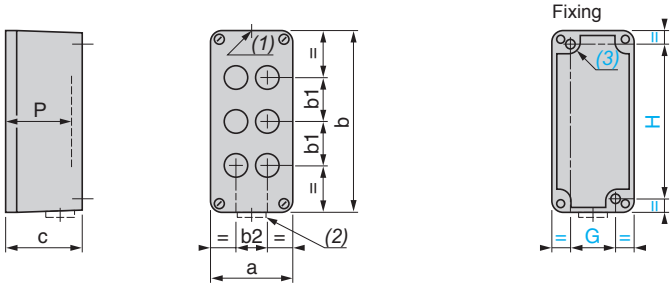

(1) 1 hole, without blanking plug, for cable gland with 14 mm maximum clamping capacity, except:
- *XAP M3●●● and XAP M4●●●: maximum capacity 18 mm,*
- *XAP M5●●●: maximum capacity 24 mm.*

(2) 1 hole, with blanking plug (protrusion 6 mm), for cable gland with 14 mm maximum clamping capacity, except:
- *XAP M3●●●: maximum capacity 18 mm,*
- *XAP M4●●● and XAP M5●●●: undrilled.*

(3) 2 x Ø 5.6 holes, depth 20.

P = Usable depth

XAP	a	b	b1	b2	c	G	H	P
J1201	80	80	–	–	51.5	50	65	49
J1501	80	80	–	–	77	50	65	74.5
M1201, M1202	80	80	–	–	51.5	50	65	49
M1501	80	80	–	–	77	50	65	74.5
M1502	80	80	–	30	77	50	65	74.5
M2202	80	130	40	–	51.5	50	115	49
M2203	80	130	30	–	51.5	50	115	49
M2204	80	130	40	30	51.5	50	115	49
M2502	80	130	40	–	77	50	115	74.5
M2503	80	130	30	–	77	50	115	74.5
M2504	80	130	40	30	77	50	115	74.5
M3203	80	175	40	–	51.5	50	160	49
M3204	80	175	30	–	51.5	50	160	49
M3206	80	175	40	30	51.5	50	160	49
M3503	80	175	40	–	77	50	160	74.5
M3504	80	175	30	–	77	50	160	74.5
M3506	80	175	40	30	77	50	160	74.5
M4506	80	220	30	–	77	50	205	74.5
M4508	80	220	40	30	77	50	205	74.5
M5508	85	310	30	–	77	55	295	74.5
M5512	85	310	40	30	77	55	295	74.5

Die-cast metal enclosures XA PM and XAP J, undrilled

XAP J●●, XAP M●●

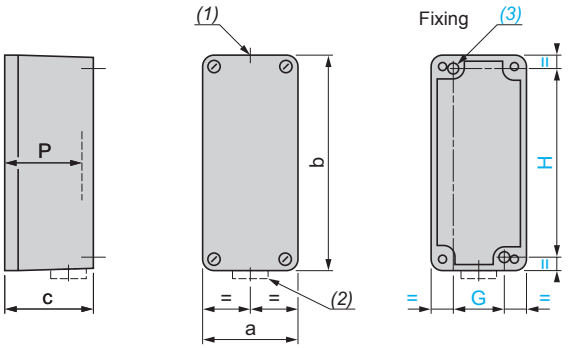

(1) 1 hole, without blanking plug, for cable gland with 14 mm maximum clamping capacity, except:
- *XAP J34, M31, M34 and M44: maximum capacity 18 mm,*
- *XAP M54: maximum capacity 24 mm.*

(2) 1 hole, with blanking plug (protrusion 6 mm), for cable gland with 14 mm maximum clamping capacity, except:
- *XAP J34, M31 and M34: maximum capacity 18 mm,*
- *XAP M44, M54: undrilled.*

(3) 2 x Ø 5.6 holes, depth 20.

P = Usable depth

XAP	a	b	c	G	H	P
J11	80	80	51.5	50	65	49
J14	80	80	77	50	65	74.5
J34	80	175	77	50	160	74.5
M11	80	80	51.5	50	65	49
M14	80	80	77	50	65	74.5
M21	80	130	51.5	50	115	49
M24	80	130	77	50	115	74.5
M31	80	175	51.5	50	160	49
M34	80	175	77	50	160	74.5
M44	80	220	77	50	205	74.5
M54	85	310	77	55	295	74.5

Sheet steel enclosures XB2 SL

XB2 SL

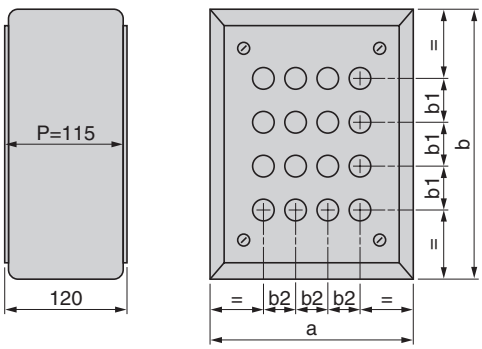

XB2	a	b	b1	b2
SL42007	200	200	40	30
SL44007	200	260	40	30
SL64007	260	260	40	30
SL65007	260	320	40	30
SL85007	320	320	40	30

Enclosures supplied without fixing points or cable entries. In both cases drill to suit.
The depth of the enclosures enables all types of Ø 22 units to be mounted.
P = Usable depth

Characteristics: page 2/50
References: page 2/52

Control stations and enclosures

Metal control stations XAP M and XAP J
Metal control stations XB2 SL

Undrilled or with cut-outs for Ø 22 control and signalling units

Die-cast metal enclosures XB2 SL, with cut-outs

XB2 SL32009

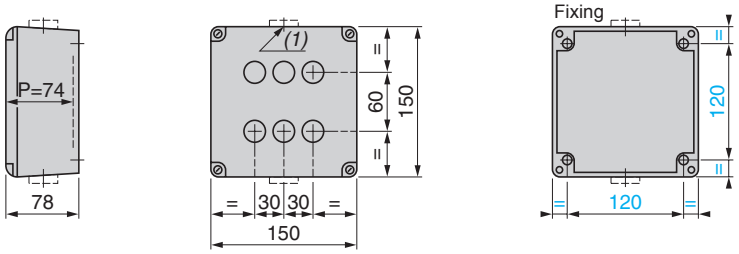

(1) 2 holes, with blanking plugs (protrusion 7.5 mm), for cable glands with 12 mm maximum clamping capacity.
P = Usable depth

XB2 SL42009

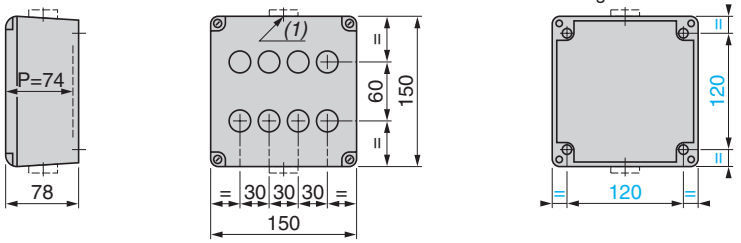

(1) 2 holes, with blanking plugs (protrusion 7.5 mm), for cable glands with 12 mm maximum clamping capacity.
P = Usable depth

Flush mounting enclosures XAP E

XAP E30●

Front plates with cut-outs for Ø 22 control and signalling units

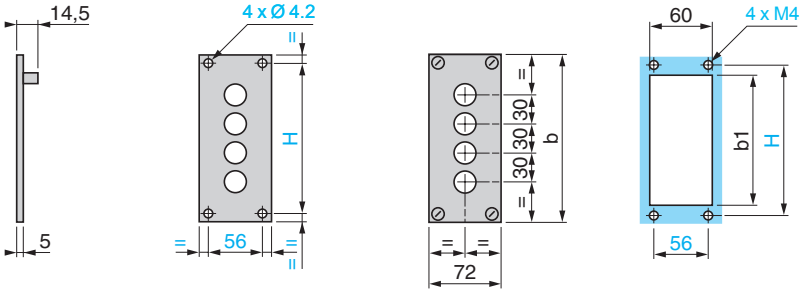

For Ø 22 control and signalling units			
Front plate			
XAP	b	b1	H
E301	72	44	56
E302	105	77	89
E303	138	110	122
E304	171	143	155
E305	204	176	188

Mounting of front plate and protective rear cover on support panel

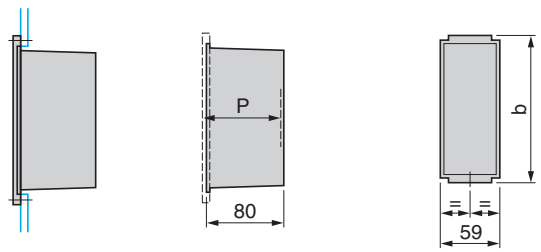

Protective rear cover for front plate XAP E30●		
XAP	b	P
E901	52	82.5
E902	85	82.5
E903	118	82.5
E904	151	82.5
E905	184	82.5

P = Usable depth

2

Operating principle

These control stations are fitted with a key operated lock and are designed to provide a starting or authorisation sequence by using the key.
To prevent unauthorised operation (shorting of the contact block) or tampering, the stations are fitted with a special lock featuring a pre-determined key position (other than its withdrawal position) that only allows removal of the front cover by the key holder.
The control stations are supplied with 2 keys.

Environment

Conformity to standards			EN/IEC 60947-5-1
Protective treatment	Standard version		"TC"
	Special version		"TH"
Ambient air temperature	For operation	**°C**	- 25…+ 70
	For storage	**°C**	- 40…+ 70
Electric shock protection	Conforming to IEC 61140		Class I
Degree of protection	Conforming to IEC 60529		IP 54
	Conforming to EN 50102		IK 08
Cable entries			1 tapped entry for cable gland and 1 entry through the rear (Ø 17 mm knock-out), with rubber cable grommet (see dimensions on next page)

Contact block characteristics

Nominal thermal current	Conforming to EN/IEC 60947-5-1	**A**	10
Rated insulation voltage			Ui = 600 V, degree of pollution 3 conforming to EN/IEC 60947-1
Rated impulse withstand voltage			Uimp = 6 kV conforming to EN/IEC 60947-1
Contact	Type		1 N/O slow break contact
	Material		Silver alloy (Ag/Ni)
Resistance across terminals		**mΩ**	≤ 25
Terminal referencing			Conforming to EN 50013 and EN 50050
Short-circuit protection	Conforming to EN/IEC 60947-5-1		10 A cartridge fuse type gG

Rated operational power

Conforming to EN/IEC 60947-5-1.
Utilisation categories AC-15 and DC-13.
Operating rate: 3600 operating cycles/hour.
Load factor: 0.5

AC-15: A600			
Ue (V)	600	240	120
Ie (A)	1.2	3	6
DC-13: Q600			
Ue (V)	600	250	125
Ie (A)	0.1	0.27	0.55

d.c. supply ⎓
Power broken in W for 1 million operating cycles

Voltage (V)	24	48	120
⎓ (W)	65	48	40

Connection			Screw clamp terminals, cross head screws slotted for 4 and 5.5 mm screwdrivers Maximum clamping capacity: 1 x 2.5 mm^2 or 2 x 1.5 mm^2 with or without cable end Tightening torque: 0.8 Nm

Control stations and enclosures
Key operated control stations XAP S

References


XAP S11111N


XAP S21111


XAP S21331


XAP S24431


XAP SZ12

Control stations with 1 N/O contact per function

Description	Key withdrawal	Marking			Mounting	Reference	Weight kg
2 position, stay put	Left-hand position	O		I	Surface	**XAP S11111N** *(1)*	0.830
					Flush	**XAP S14111N** *(1)*	0.890
2 position, spring return from right to left	Left-hand position			➡	Surface	**XAP S11221N** *(1)*	0.830
					Flush	**XAP S14221N** *(1)*	0.890
2 position, stay put + 2 spring return buttons	Left-hand position	⬆ O		⬇ I	Surface	**XAP S21111**	1.080
					Flush	**XAP S24111**	1.190
3 position, stay put	Centre position	⬆	O	⬇	Surface	**XAP S11331N** *(1)*	0.850
					Flush	**XAP S14331N** *(1)*	0.910
3 position, spring return from left and right to centre	Centre position	⬆	O	⬇	Surface	**XAP S11431N** *(1)*	0.850
					Flush	**XAP S14431N** *(1)*	0.910
3 position, stay put + 1 spring return button	Centre position	⬅	Stop O	➡	Surface	**XAP S21331**	1.070
					Flush	**XAP S24331**	1.180
3 position, spring return from left and right to centre + 1 spring return button	Centre position	⬅	Stop O	➡	Surface	**XAP S21431**	1.070
					Flush	**XAP S24431**	1.180

100 x 100 front plates (for XAP S11●●●N control stations)

Description	Marking			Reference	Weight kg
2 position, stay put	O		I	**XAP SZ11**	0.045
2 position			➡	**XAP SZ12**	0.045
3 position	⬆	O	⬇	**XAP SZ13**	0.045

Separate components and spare parts

Description	Type of contact	For use with control stations	Sold in lots of	Unit reference	Weight kg
Standard contact blocks	N/O	XAP S1●●●●N	5	**ZEN L1111**	0.015
		XAP S2●●●●	5	**ZB2 BE101**	0.015

Accessories (for control stations XAP S11●●●N and XAP S14●●●N)

Description	Key number	Reference		Weight (kg)	
		Key only	2 keys + barrel *(2)*	Key only	2 keys + barrel
Keys	Number to be stated	**XAP SZ50**	**XAP SZ15**	0.011	0.140
	BC1011	**XAP SZ01**	**XAP SZ16**	0.011	0.140
	BC1025	**XAP SZ02**	**XAP SZ17**	0.011	0.140
	BC1029	**XAP SZ03**	**XAP SZ18**	0.011	0.140
	BC1031	**XAP SZ04**	**XAP SZ19**	0.011	0.140
	BC1069	**XAP SZ05**	**XAP SZ20**	0.011	0.140

*(1) For a control station with a specific key number, add the letter Z to the end of the reference and state the key number when ordering. Example: **XAP S11111N** becomes **XAP S11111NZ**.*
(2) For keys and barrels with other numbers, please consult your customer care centre.

Dimensions, mounting

XAP S11●●●N

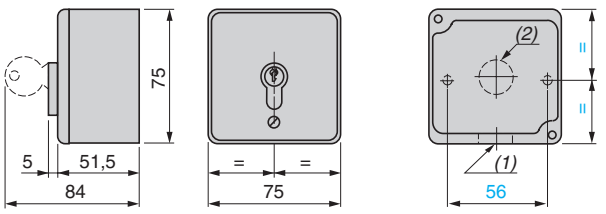

XAP S14●●●N

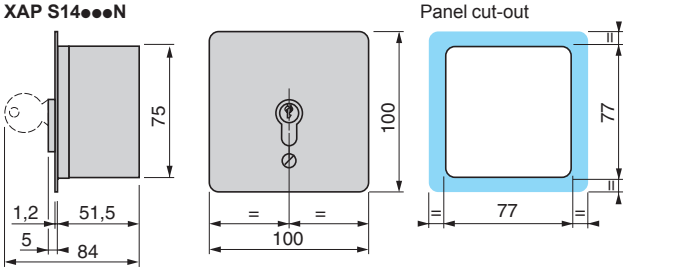

XAP S21●●●

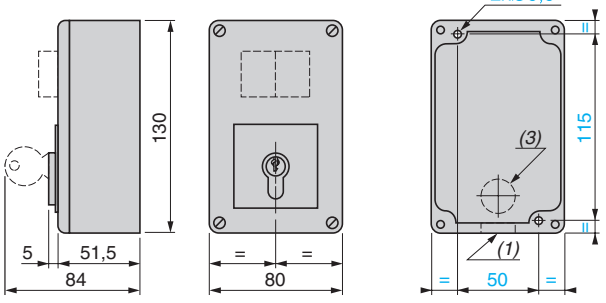

XAP S24●●●

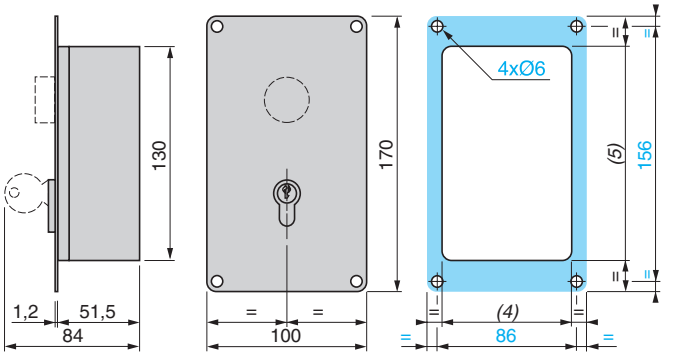

(1) 1 tapped entry for 12 mm maximum capacity cable gland.
(2) Knock-out: cable entry through rear, Ø 17 mm.
(3) Optional: cable entry through rear.
(4) 81 mm min.
(5) 131 mm min.

Control stations and enclosures
Lift inspection stations
Harmony® XAL F

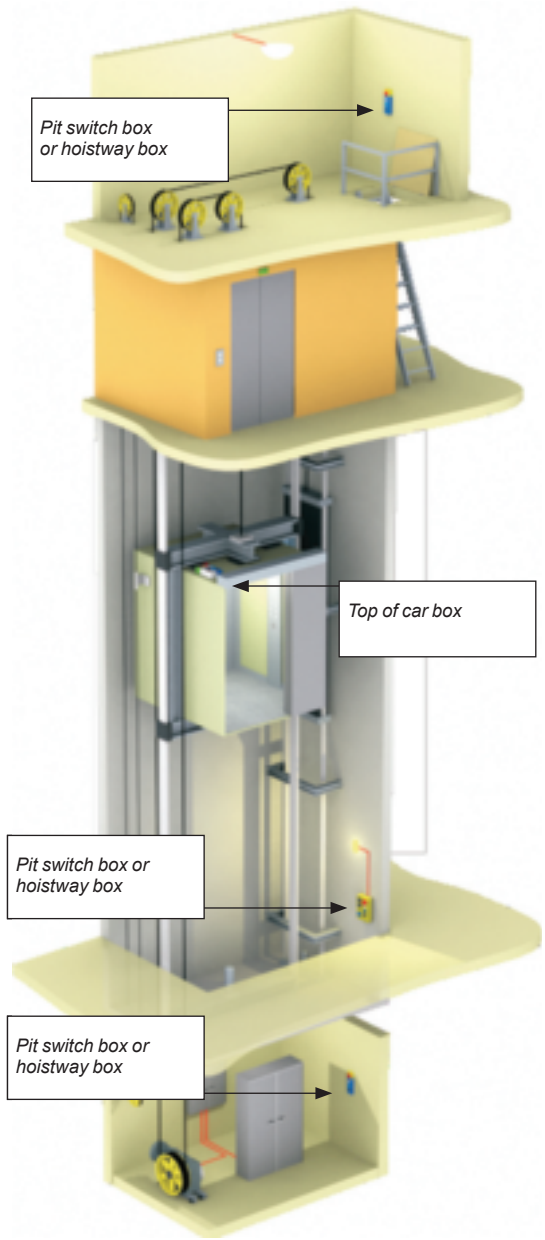

Presentation

XAL F lift inspection stations are designed for lift maintenance applications.

Three types of stations are available:
- Top of car boxes
- Pit switch boxes
- Hoistway boxes.

- These boxes make it possible to control movement of the lift.
- Used in conjunction with the other operating components, they facilitate inspection and repair work.
- They are installed outside the lift car.
- Safety: inspection stations prevent any risk of uncontrolled movement of the lift while such work is being carried out.

- Supplied complete, these lift inspection stations are equipped with Ø 22 control and signalling units from the Harmony® XB5 and XB7 ranges; they are catalogue listed and are certified CE.
- Stations can also be configured by the user: empty enclosures which can be equipped to meet custom requirements are available from the catalogue.

Functions

Function	Equipment
Control and signalling	■ Flush pushbuttons, unmarked or with marking *(1)*. ■ Selector switches with standard handle or key switches. ■ Pilot lights with integral LED and “true colours”. ■ Illuminated pushbuttons.
Emergency Stop (EN/ISO 13850)	■ Mushroom head, latching, Emergency Stop pushbutton with pilot light and mechanical state indicator; □ White LED, on front panel. □ 360° mechanical indication by green ring and by two windows with green/red indication, on front panel.
Power socket	■ Extensive range of power sockets to meet the specific needs of each country. Degree of protection IP 44.

(1) Double injection-moulded marking.

Characteristics: page 2/62 | References: page 2/65 | Mounting: page 2/73 | Dimensions: page 2/74

Control stations and enclosures

Lift inspection stations
Harmony® XAL F

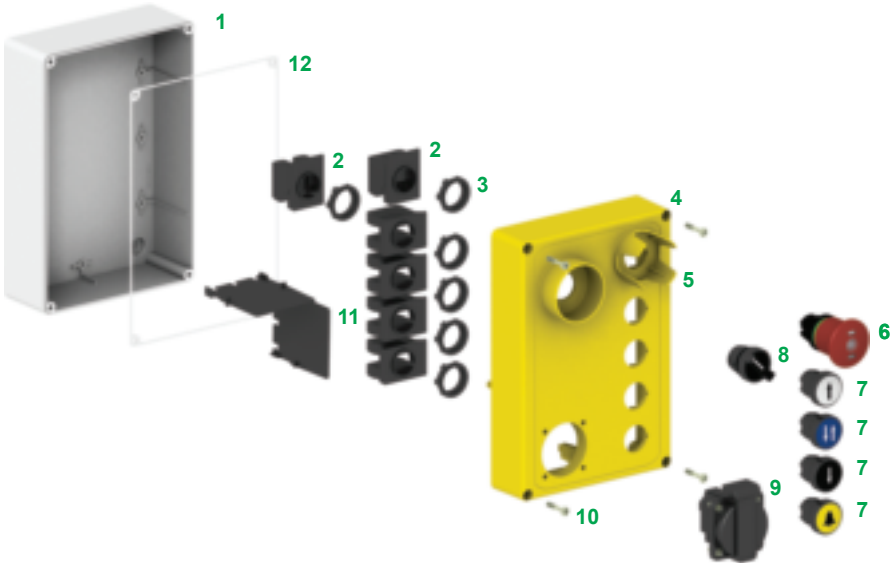

Description

Top of car boxes

1 Enclosure base, grey.
2 Contact block.
3 Nuts.
4 Enclosure lid, yellow.
5 Guard.
6 Red, mushroom head, latching Emergency Stop pushbutton with pilot light (white) and mechanical state indicator (green/red).
7 Flush pushbuttons, with marking: ↑, ↑↓, ↓, ▲.
8 Selector switch with standard handle.
9 230 V power socket.
10 Stainless steel screws.
11 Partition plates.
12 Gasket

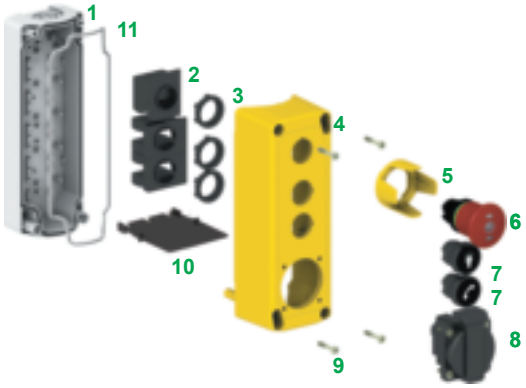

Pit switch boxes

1 Enclosure base, grey.
2 Contact block.
3 Nuts.
4 Enclosure lid, yellow.
5 Guard.
6 Red, mushroom head, latching Emergency Stop pushbutton with pilot light (white) and mechanical state indicator (green/red).
7 Flush pushbuttons, with marking , .
8 230 V power socket.
9 Stainless steel screws.
10 Partition plate
11 Gasket

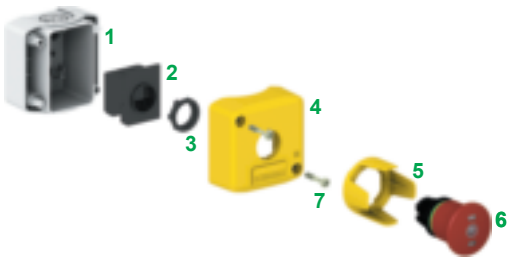

Hoistway boxes

1 Enclosure base, grey.
2 Contact block.
3 Nut.
4 Enclosure lid, yellow.
5 Guard.
6 Mushroom head for latching Emergency Stop pushbutton with pilot light (white) and mechanical state indicator (green/red).
7 Stainless steel screws.

Control stations and enclosures
Lift inspection stations
Harmony® XAL F

Empty enclosures or complete units

Environment characteristics

Protective treatment	Standard version		"TH" treatment
Ambient air temperature around the device	Storage	**°C**	- 40… + 70
	Operation	**°C**	0… + 50 (empty enclosures or complete units) - 25… + 70 (control and signalling units type XB5 or XB7)
Electric shock protection			Conforming to IEC 61140 class II
Degree of protection	Conforming to IEC 60529		IP 54 IP 44 with power socket
Mechanical shock protection	Conforming to IEC 50102		Non illuminated heads: IK 03 Illuminated heads: IK 05
Conforming to standards			EN 81-1, EN/IEC 60947-1, EN/IEC 60947-5-1, EN/IEC 60947-5-4, EN/IEC 60947-5-5
			EN/ISO 13850 (if equipped with "Trigger action" Emergency Stop buttons with pilot light and mechanical state indicator)
Product certifications			CE
Terminal referencing			Conforming to EN 50005 and EN 50013
Material and colours			Polycarbonate, light grey RAL 7035 (base) and yellow (lid)
Cable entries			Hoistway box and pit switch box: Knock-outs for n° 13 (CM12, Pg13.5) cable glands and tapped ISO 20 Top of car box: cut-outs required

Electrical characteristics

Rated insulation voltage	Conforming to EN 81-1	**V**	250 for power sockets
			500 for ZBE10● contact

Contact function characteristics of XB5 pushbuttons, switches and pilot lights

Mechanical characteristics

Contact operation	N/C or N/O		Slow break
Positive operation	Conforming to EN/IEC 60947-5-1 appendix K		All functions incorporating an N/C contact have positive opening operation
Operating travel (to change the electrical state)	Pushbutton	**mm**	Changing N/C state: 1.5 Changing N/O state: 2.6 Total travel: 4.3
Operating force	Pushbutton	**N**	Changing N/C state: 3.5 Changing N/O state: 3.8
	Additional contact only (to change the state)	**N**	Single N/C contact: 2 Single N/O contact: 2.3
	Emergency stop with N/C + N/O	**N**	Trigger action push-pull: 50
Operating torque (to change the electrical state)	Selector switches	**N.m**	N/O contact: 0.14
	Additional contact only	**N.m**	N/O contact: 0.05
Mechanical durability (in millions of operating cycles)	Spring return pushbutton		5
	Non illuminated selector switch		1
	Illuminated selector switch		0.5
	Latching mushroom head pushbutton for Emergency Stop with mechanical state indicator		0.3 with 2 contacts
Vibration resistance	Conforming to IEC 60068-2-6		Frequency: 2…500 Hz: 5 gn
Shock resistance	Conforming to IEC 60068-2-27		All functions except spring return mushroom head pushbuttons: □ half sine wave acceleration 11 ms: 50 gn □ half sine wave acceleration 18 ms: 30 gn Spring return mushroom head pushbutton: □ half sine wave acceleration 11 ms: 15 gn

Electrical characteristics

Cabling capacity	Conforming to EN/IEC 60947-1	**mm²**	Screw clamp terminals Min: 1 x 0.22 without cable end Max: 2 x 1.5 with cable end Cross head screws (Pozidriv or Philips type 1), slotted for flat 4 and 5.5 mm screwdriver Tightening torque: 0.8 N.m (max 1.2 N.m)
Contact material			Silver alloy (Ag / Ni)
Rated thermal current	Conforming to EN/IEC 60947-5-1	**A**	Standard block with screw clamp terminals: 10
Short-circuit protection	Conforming to EN/IEC 60947-5-1	**A**	Standard block with screw clamp terminals: 10 (gG cartridge fuse conforming to IEC 60269-1)
Rated insulation voltage	Conforming to EN/IEC 60947-1	**V**	Standard block with screw clamp terminals: Ui = 600 degree of pollution 3
Rated impulse withstand voltage	Conforming to EN/IEC 60947-1	**kV**	Standard block with screw clamp terminals: Uimp = 6
Rated operational characteristics Conforming to EN/IEC 60947-5-1	a.c. supply: utilisation category AC-15		A 600: Ue = 600 V and Ie = 1.2 A or Ue = 240 V and Ie = 3 A or Ue = 120 V and Ie = 6 A B300 with ZBE 7●●● contact blocks for printed circuit board connection
	d.c.supply: utilisation category DC-13		Q 600: Ue = 600 V and Ie = 0.1 A or Ue = 250 V and Ie = 0.1 A or Ue = 125 V and Ie = 0.22 A R300 with ZBE 7●●● contact blocks for printed circuit board connection
Electrical durability Conforming to EN/IEC 60947-5-1 appendix C Frequency: 3600 operating cycles/hour Load factor: 0.5	a.c. supply for 1 million operating cycles: utilisation category AC-15	**V** **A**	24 / 4 | 120 / 3 | 230 / 2
	d.c. supply for 1 million operating cycles: utilisation category DC-13	**V** **A**	24 / 0.5 | 110 / 0.2
Electrical reliability	Failure rate Conforming to EN/IEC 60947-5-4		At 17 V and 5 mA, $\lambda < 10^{-8}$ At 5 V and 1 mA, $\lambda < 10^{-6}$

2

Ordinary light function characteristics, with integral LED

Ø 22 mm control and signalling units with plastic bezel, type XB5

Voltage limits	For rated voltage	**V**	12 V: 10 to 15 ⎓; 10.2 to 13.8 ∿ 24 V: 19.2 to 15 ⎓; 21.6 to 13.8 ∿ 24 to 120 V: 20 to 132 ⎓ 48 to 120 V: 40 to 132 ∿ 240 V: 195 to 264 ∿
Current consumption	Applicable to all colours	**mA**	Blocks with ⎓ 12 V supply: 18 Blocks with ⎓ 24 V supply: 18 Blocks with ∿ 120 V supply: 14 Blocks with ∿ 240 V supply: 14
Service life	At rated voltage and at an ambient temperature of 25 °C	**H**	100 000
Surge withstand	Conforming to IEC 61000-4-5	**kV**	1
Resistance to fast transients	Conforming to IEC 61000-4-4	**kV**	2
Resistance to electromagnetic fields	Conforming to IEC 61000-4-3	**V/m**	10
Resistance to electrostatic discharges	Conforming to IEC 61000-4-2	**kV**	8: in free air, on insulating parts 6: on contact, on metal parts
Direct parallel connection across inductive load E.g.: contactor coil or solenoid	Maximum power of load	**VA**	For high power applications (≥ 30 VA), a **ZBZ V●** LED suppressor must be connected across the light block terminals (see page 36168/4)
Electromagnetic emission	Conforming to IEC 55011		Class B

Monolithic plastic pilot lights type XB7 with integral LED

Voltage limits	For rated voltage	**V**	24 V ⎓: 19.2…30 ⎓; 21.6…26.4 ∿ 120 V ∿: 100…132 ∿ 230-240 V ∿: 195…264 ∿
Current consumption	Applicable to all colours	**mA**	18 (all types, all voltages)
Service life	At rated voltage and at an ambient temperature of 25 °C	**H**	80 000
Electromagnetic emissions	Conforming to IEC 55011		Class B

Connections

Ø 22 mm control and signalling units with plastic bezel, type XB5

Cabling capacity	Conforming to EN/IEC 60947-1	**mm²**	Screw clamp terminals □ min: 1 x 0.22 without cable end □ max.: 2 x 1.5 with cable end or 2 x 2.5 without cable end Cross head screws (Pozidriv or Philips type 1), slotted for flat 4 and 5.5 mm screwdriver Tightening torque: 0.8 N.m (max 1.2 N.m)

Monolithic plastic pilot lights type XB7 with integral LED

Cabling capacity	Conforming to EN/IEC 60947-1	**mm²**	Screw clamp terminals □ min: 1 x 0.34 without cable end □ max.: 2 x 1.5 with cable end Cross head screws (Pozidriv or Philips type 1), slotted for flat 4 and 5.5 mm screwdriver Tightening torque: 0.8 N.m (max 1.2 N.m)

Control stations and enclosures

Lift inspection stations
Harmony® XAL F
Complete stations, empty enclosures

Hoistway boxes (grey base and yellow lid)

Complete boxes

Description	Type of push	Type of contact N/O	Type of contact N/C	Shape of head	Reference	Weight kg
1 red, mushroom head Emergency Stop pushbutton, with guard	Latching, with mechanical state indicator (green/red)	1	1		**XAL FKT64451**	0.175
		–	1		**XAL FKT64421**	0.165
		–	2		**XAL FKT64441**	0.175
	Latching, with pilot light (white) and mechanical state indicator (green/red)	1	1		**XAL FKT6445●11** *(1)*	0.185
1 red, mushroom head Emergency Stop pushbutton	Latching, with mechanical state indicator (green/red)	1	1		**XAL FKT6445**	0.165
		–	1		**XAL FKT6442**	0.155
		–	2		**XAL FKT6444**	0.165
	Latching, with pilot light (white) and mechanical state indicator (green/red)	1	1		**XAL FKT6445●1** *(1)*	0.175
1 spring return pushbutton	Flush black	1	–		**XAL FKA2521**	0.130
		1	1		**XAL FKA2525**	0.140
		2	–		**XAL FKA2523**	0.140
	Flush yellow	1	–		**XAL FKA5511**	0.130
		1	1		**XAL FKA5515**	0.140
		2	–		**XAL FKA5513**	0.140
	Flush black	1	–		**XAL FKA2531**	0.130
		1	1		**XAL FKA2535**	0.140
		2	–		**XAL FKA2533**	0.140

105765
XAL FKT644●1

105766
XAL FKT644●

105769
XAL FKA252●

105770
XAL FKA551●

105771
XAL FKA253●

Empty enclosure for configuration by the user

Number of Ø 22 mm cut-outs	Reference	Weight kg
1	**XAL FK01**	0.110

105772
XAL FK01

*(1) Replace the ● in the reference with **B** for ∿/⎓ 24 V, with **G** for ∿ 110 …120 V or with **M** for ∿ 230…240 V.*

Other versions Please consult your customer care centre

Control stations and enclosures

Lift inspection stations
Harmony® XAL F
Complete stations, empty enclosures

Pit switch boxes (grey base and yellow lid)

Complete boxes

Description	Type of push	Type of contact N/O	Type of contact N/C	Shape of head	Reference	Weight kg
1 red, mushroom head Emergency Stop pushbutton, with guard	Latching, with mechanical state indicator (green/red)	1	1		**XAL FK2001E**	0.500
1 spring return pushbutton	1 flush black	1	–			
1 power socket (IEC blue) *(1)*						

105762



XAL FK2001E

1 red, mushroom head Emergency Stop pushbutton, with guard	Latching, with mechanical state indicator (green/red)	1	1		**XAL FK3001E**	0.550
2 spring return pushbuttons	1 flush black	1	–			
	1 flush black	1	–			
1 power socket (IEC blue) *(1)*						

105763



XAL FK3001E

1 red, mushroom head Emergency Stop pushbutton, with guard	Latching, with pilot light (white ~/⎓ 24 V) and with mechanical state indicator (green/red)	1	1		**XAL FK3011E**	0.550
2 spring return pushbuttons	1 flush black	1	–			
	1 flush yellow	1	–			
1 power socket (IEC blue) *(1)*						

105764



XAL FK3011E

Empty enclosures for configuration by the user

Number of Ø 22 mm cut-outs	Number of Ø 45 mm cut-outs for power socket	Reference	Weight kg
3	–	**XAL FK03**	0.290
4	–	**XAL FK04**	0.290
2	1	**XAL FK021**	0.290
3	1	**XAL FK031**	0.290

105773



XAL FK04

105774



XAL FK031

(1) IEC Blue power socket type XAL FZE3; for other types of power socket, see page 2/70.

Other versions Please consult your customer care centre

Presentation: page 2/60 Characteristics: page 2/62 Mounting: page 2/73 Dimensions: page 2/74

Control stations and enclosures

Lift inspection stations
Harmony® XAL F
Complete stations, empty enclosures

105758



XAL FP6003E

105759



XAL FP7005E

105784



XAL FK4001

105775



XAL FP0714

Top of car boxes (grey base and yellow lid)

Complete boxes

Description	Type of operator	Type of contact N/O	Type of contact N/C	Shape of head	Reference	Weight kg
1 red, mushroom head Emergency Stop pushbutton, with guard	Latching, with mechanical state indicator (green/red)	1	1		**XAL FP6003E**	0.810
4 spring return pushbuttons	1 flush white	2	–			
	1 flush blue	1	–			
	1 flush black	2	–			
	1 flush yellow	1	–			
1 selector switch, with guard	Standard black handle, 2-position stay put	3	3			
1 power socket (IEC blue) *(1)*						
1 red, mushroom head Emergency Stop pushbutton, with guard	Latching, with pilot light (white ∿/⎓ 24 V) and mechanical state indicator (green/red)	1	1		**XAL FP7005E**	0.850
4 spring return pushbuttons	1 flush white	2	–			
	1 flush blue	1	–			
	1 flush black	2	–			
	1 flush yellow	1	–			
2 selector switches, with guard	Standard black handle, 2-position stay put	2	2			
	Standard black handle, 3-position spring return to centre	1	1			
1 power socket (IEC blue) *(1)*						
1 red, mushroom head Emergency Stop pushbutton, with guard	Latching, with mechanical state indicator (green/red)	1	1		**XAL FK4001**	0.550
2 spring return pushbuttons	1 flush white	2	–			
	1 flush black	2	–			
1 selector switch, with guard	Standard black handle, 2-position stay put	2	2			

Empty enclosures for configuration by the user

Number of Ø 22 mm cut-outs	Number of Ø 45 mm cut-outs for power socket	Reference	Weight kg
6	1	**XAL FP0612**	0.500
	0	**XAL FP0602**	0.500
7	1	**XAL FP0714**	0.500
	0	**XAL FP0704**	0.500

(1) IEC Blue power socket type XAL FZE3; for other types of power socket, see page 2/70.

Other versions Please consult your customer care centre

Control stations and enclosures
Lift inspection stations
Harmony® XAL F
Separate components

Heads to combine with bodies: see page 2/71


523149

ZB5 AA58


522694

ZB5 AT8643M


106215

ZB5 AD●


106224

ZB5 AG2


106227

ZB5 AK1233

Ø 22 mm control and signalling units with plastic bezel

Pushbuttons, switches and pilot lights for user assembly: heads

Description	Type of push	Marking Symbol	Marking Colour	Colour of push	Reference	Weight kg
Heads for spring return pushbuttons	Flush		White	Yellow	**ZB5 AA551**	0.018
			Black	White	**ZB5 AA334**	0.018
			White	Blue	**ZB5 AA650**	0.018
			White	Black	**ZB5 AA335**	0.018
			White	Black	**ZB5 AA252**	0.018
			White	Black	**ZB5 AA253**	0.018
	Flush, illuminated *(1)*		–	Orange	**ZB5 AA58**	0.018
Illuminated mushroom head for Emergency stop trigger action and mechanical latching pushbuttons *(2) (4)*	Push-pull Ø 40 mm With pilot light *(3)* and mechanical state indicator		–	Red	**ZB5 AT8643M**	0.034

Description	Type of operator	Shape of head	Number and type of positions	Reference	Weight kg
Heads for selector switches	Standard handle, black		2 - stay put	**ZB5 AD2**	0.025
			3 - spring return to centre	**ZB5 AD5**	0.025
	Key switch with key n° 455 *(5)*		2 - stay put *(6)*	**ZB5 AG2**	0.050
Heads for illuminated selector switches with standard handle *(3)* Protected LED	Standard handle, green		2 - stay put	**ZB5 AK1233**	0.021

(1) For insertion of legend.
(2) Conforming to standards EN/IEC 60204-1 and ISO 13850, to Machinery Directive 98/37/EC and to standard EN/IEC 60947-5-5.
(3) For use with bodies comprising a light source with integral LED. Light blocks and body fixing collar, see page 2/71. Maximum number of contacts fitted to the associated body: 2.
(5) Other key numbers available:
*- key n° 421E: add suffix **12** to the reference,*
*- key n° 458A: add suffix **10** to the reference,*
*- key n° 520E: add suffix **14** to the reference,*
*- key n° 3131A: add suffix **20** to the reference.*
*Example: for a switch head with key n° 421E, 2-position stay put with key withdrawal from the left-hand position, the reference becomes: **ZB5 AG212**. For specific keys with other numbers, please consult your* customer care centre.
(6) The symbol ⚷ indicates key withdrawal position(s).

Other versions

Specific markings on boxes
Other power sockets
Special cut-outs in enclosures
Customised products

Please consult your customer care centre


522410

XB7 EV0●●P

Ø 22 mm control and signalling units with plastic bezel *(continued)*

Monolithic pilot lights

Description	Shape of head	Supply voltage V	Colour of lens	Sold in lots of	Unit reference	Weight kg
Pilot lights with integral LED ("true" colours)		⎓ 24 V	White	10	**XB7 EV01BP**	0.020
			Green	10	**XB7 EV03BP**	0.020
			Red	10	**XB7 EV04BP**	0.020
			Yellow	10	**XB7 EV05BP**	0.020
			Blue	10	**XB7 EV06BP**	0.020
			Clear	10	**XB7 EV07BP**	0.020
			Orange	10	**XB7 EV08BP**	0.020
		~ 120 V 50-60 Hz	White	10	**XB7 EV01GP**	0.020
			Green	10	**XB7 EV03GP**	0.020
			Red	10	**XB7 EV04GP**	0.020
			Yellow	10	**XB7 EV05GP**	0.020
			Blue	10	**XB7 EV06GP**	0.020
			Clear	10	**XB7 EV07GP**	0.020
			Orange	10	**XB7 EV08GP**	0.020
		~ 230 V 50-60 Hz	White	10	**XB7 EV01MP**	0.020
			Green	10	**XB7 EV03MP**	0.020
			Red	10	**XB7 EV04MP**	0.020
			Yellow	10	**XB7 EV05MP**	0.020
			Blue	10	**XB7 EV06MP**	0.020
			Clear	10	**XB7 EV07MP**	0.020
			Orange	10	**XB7 EV08MP**	0.020


814388

XB5 AVB1

Pilot lights with integral LED

Screw clamp terminal connections (Schneider Electric anti-retightening system)

Complete units

Description	Shape of head	Supply voltage V	Colour	Reference	Weight kg
Pilot lights with plain lens		⎓ 24 (50/60 Hz)	White	**XB5 AVB1** (ZB5 AVB1 + ZB5 AV013)	0.038
			Green	**XB5 AVB3** (ZB5 AVB3 + ZB5 AV033)	0.038
			Red	**XB5 AVB4** (ZB5 AVB4 + ZB5 AV043)	0.038
			Orange	**XB5 AVB5** (ZB5 AVB5 + ZB5 AV053)	0.038
			Blue	**XB5 AVB6** (ZB5 AVB6 + ZB5 AV063)	0.038
		~ 110...120 (50/60 Hz)	White	**XB5 AVG1** (ZB5 AVG1 + ZB5 AV013)	0.038
			Green	**XB5 AVG3** (ZB5 AVG3 + ZB5 AV033)	0.038
			Red	**XB5 AVG4** (ZB5 AVG4 + ZB5 AV043)	0.038
			Orange	**XB5 AVG5** (ZB5 AVG5 + ZB5 AV053)	0.038
			Blue	**XB5 AVG6** (ZB5 AVG6 + ZB5 AV063)	0.038
		~ 230...240 (50/60 Hz)	White	**XB5 AVM1** (ZB5 AVM1 + ZB5 AV013)	0.038
			Green	**XB5 AVM3** (ZB5 AVM3 + ZB5 AV033)	0.038
			Red	**XB5 AVM4** (ZB5 AVM4 + ZB5 AV043)	0.038
			Orange	**XB5 AVM5** (ZB5 AVM5 + ZB5 AV053)	0.038
			Blue	**XB5 AVM6** (ZB5 AVM6 + ZB5 AV063)	0.038

Control stations and enclosures
Lift inspection stations
Harmony® XAL F
Complete stations, empty enclosures

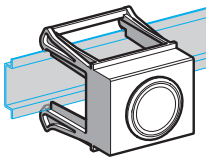

15151



ZB5 SZ3



AB1 VV215



AB1 TP215

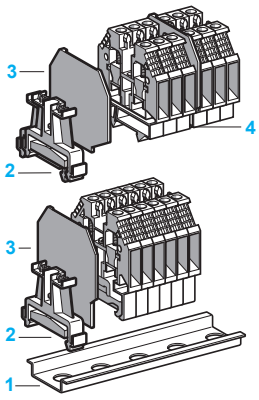

Power sockets

Description	For use in	Colour	Sold in lots of	Unit reference	Weight kg
230 Volt power socket, with protective shutter (protection: IP 44)	Germany	Black	1	**XAL FZE2**	0.050
		Blue	1	**XAL FZE3**	0.050
	France	Grey	1	**XAL FZF8**	0.050
	Italy	Blue	1	**XAL FZT3**	0.050
	United Kingdom	Black	1	**XAL FZB2**	0.050
	Switzerland	Blue	1	**XAL FZS3**	0.050

Accessories

Description	Application	Sold in lots of	Unit reference	Weight kg
Partition plates	For 230 Volt power socket	1	**XAL FZ1**	0.010
Nut	Fixing the head of Ø 22 mm control and signalling units	10	**ZB5 AZ901**	0.002
Plastic blanking plug, round, black (supplied with nut ZB5 AZ901)	Ø 22 mm cut-outs for circular heads	10	**ZB5 SZ3**	0.009
Bracket for XB5 A pushbuttons or XB7 E pilot lights	35 mm ⎓ mounting rail (for use in modular enclosure).	1	**15151**	0.040

Terminal blocks

Description	Type	Sold in lots of	Unit reference	Weight g
Terminal block for clip-on mounting on 15 mm ⎓ rail	Screw clamp terminals for cables Colour: grey - Width: 5 mm Cabling c.s.a. (mm^2): - flexible cable without cable end: 0.5…2.5 - flexible cable with cable end: 0.5…1.5 - solid cable: 0.5…4	10	**AB1 VV215**	4.2
Protective earth	Colour: green/yellow - Width: 6 mm Cabling c.s.a. (mm^2): - flexible cable without cable end: 0.5…4 - flexible cable with cable end: 0.5…2.5 - solid cable: 0.5…6	100	**AB1 TP215**	11.7
1 **15 x 5 rail for terminal blocks**	Length: 1m	10	**AB1 PC15**	140
2 **Plastic end stop**	Width: 7.5	100	**AB1 AB715**	2.2
3 **End plate**	Colour: grey Thickness: 1.5 mm	50	**AB1 AC2**	1.3
4 **Partition plate**	Colour: grey Thickness: 1.5 mm	50	**AB1 AS2**	1.7

Presentation: page 2/60 | Characteristics: page 2/62 | Mounting: page 2/73 | Dimensions: page 2/74

Control stations and enclosures
Lift inspection stations
Harmony® XAL F
Separate components


ZB5 AZ101


ZB5 AZ102


ZB5 AW0B51


ZBE 101


ZBE 102


ZBV B●


ZB5 AZ009

Bodies for Ø 22 mm control and signalling units with screw clamp terminal connections (1)

Description	For use with	Type of contact N/O	Type of contact N/C	Reference	Weight kg
Fixing collar + single contact block with screw clamp terminal connections	Heads for ZB5 pushbuttons	1	–	**ZB5 AZ101**	0.021
		–	1	**ZB5 AZ102**	0.021
		2	–	**ZB5 AZ103**	0.030
		–	2	**ZB5 AZ104**	0.030
		1	1	**ZB5 AZ105**	0.030

Description	For use with	Supply voltage	Colour of light source	Type of contact N/O	Type of contact N/C	Reference	Weight kg
Fixing collar + single contact block with screw clamp terminal connections + light block with integral LED Protected LED	ZB5 AA58	⎓ 24 V	Orange	1	–	**ZB5 AW0B51**	0.032

Contact blocks with screw clamp terminal connections

Description	For use with	Sold in lots of	Type of contact N/O	Type of contact N/C	Unit reference	Weight kg
Standard single contact blocks (2) (3)	Heads for ZB5 pushbuttons	5	1	–	**ZBE 101**	0.011
		5	–	1	**ZBE 102**	0.011

Light blocks with screw clamp terminal connections

Description	For use with	Supply voltage	Colour of light source	Sold in lots of	Unit reference	Weight kg
Integral LED (to combine with heads for integral LED) Protected LED	ZB5 AA58	⎓ 24 V	Orange	5	**ZBV B5**	0.017
		∿ 48…120 V	Orange	5	**ZBV G5**	0.017
		∿ 230…240 V	Orange	5	**ZBV M5**	0.017
	ZB5 AK1233	⎓ 24 V	Green	5	**ZBV B3**	0.017
		∿ 48…120 V	Green	5	**ZBV G3**	0.017
		∿ 230…240 V	Green	5	**ZBV M3**	0.017
	ZB5 AT8643M	⎓ 24 V	White	5	**ZBV B1**	0.017
		∿ 48…120 V	White	5	**ZBV G1**	0.017
		∿ 230…240 V	White	5	**ZBV M1**	0.017

Accessories

Description	For use with	Sold in lots of	Unit reference	Weight kg
Body/fixing collar	Standard single contact blocks or light blocks with integral LED	10	**ZB5 AZ009**	0.006

(1) Can be fitted with additional contact blocks.
(2) The contact blocks enable variable composition of body/contact assemblies. Maximum number of rows possible: 3. Either 3 rows of 3 single contacts or 1 row of 3 double contacts + 1 row of 3 single contacts (double contacts occupy 2 rows).
*(3) For use with body/fixing collar **ZB5 AZ009**.*

Control stations and enclosures
Lift inspection stations
Harmony® XAL F
Separate components



ZBE 701



ZBE 702

Contact blocks for printed circuit board connection *(1)*

Description	Type of contact N/O	Type of contact N/C	For use with	Sold in lots of	Unit reference	Weight kg
Standard contact blocks	1	–	Heads for ZB5 pushbuttons	10	**ZBE 701**	0.002
	–	1	Heads for ZB5 pushbuttons	10	**ZBE 702**	0.002
Specific contact blocks for low power switching with gold flashed contacts	1	–	Heads for ZB5 pushbuttons	10	**ZBE 7016**	0.003
	–	1	Heads for ZB5 pushbuttons	10	**ZBE 7026**	0.003

Light blocks for printed circuit board connection *(1)*

Description	Supply voltage V	For use with	Colour of LED	Sold in lots of	Unit reference	Weight kg
Integral LED (to combine with heads for integral LED) Protected LED	≂ 24	ZB5 AA58	Orange	5	**ZBV B57**	0.004
		ZB5 AK1233	Green	5	**ZBV B37**	0.004
		ZB5 AT8643M	White	5	**ZBV B17**	0.004



ZBV B●7

Adapter (socket) for printed circuit board

For use with	Thickness of printed circuit board mm	Sold in lots of	Unit reference	Weight kg
Electrical block (contact or light)	1.6 ± 0.2	10	**ZBZ 010**	0.008
	2.2 ± 0.2	10	**ZBZ 011**	0.008
	3.2 ± 0.2	10	**ZBZ 012**	0.008



ZBZ 01●

Accessories specifically for printed circuit board mounting *(1)*

Description	For use with	Sold in lots of	Unit reference	Weight kg
Fixing collar/pillar	Printed circuit board support	10	**ZB5 AZ079**	0.003
Fixing screw for printed circuit board	Fixing collar/pillar ZB5 AZ079	10	**ZBZ 006**	0.011



ZB5 AZ079

(1) For details of panel and printed circuit board cut-outs: see page 2/73.
Must be used in conjunction with adapter (socket) ***ZBZ 010****.*

Pushbuttons, switches and pilot lights for printed circuit board connection

Panel cut-outs (viewed from installer's side)

Dimensions in mm

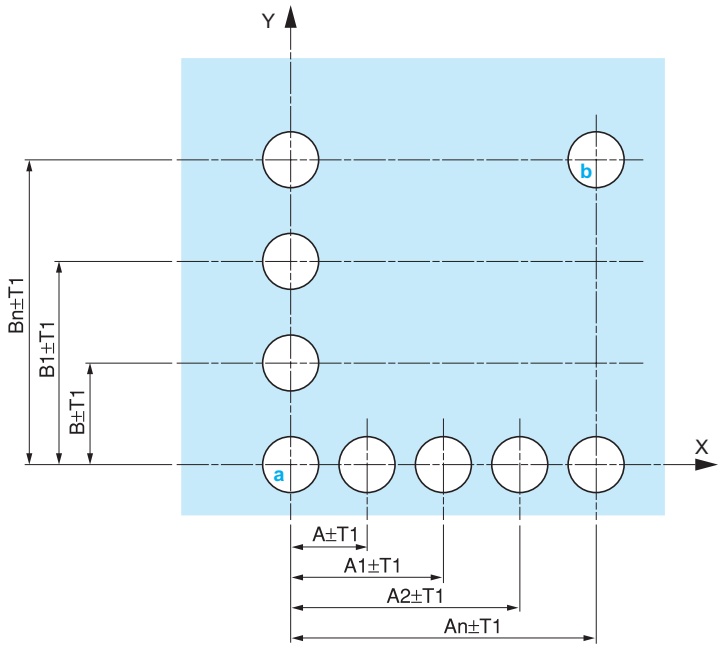

Printed circuit board cut-outs (viewed from electrical block side)

Dimensions in mm

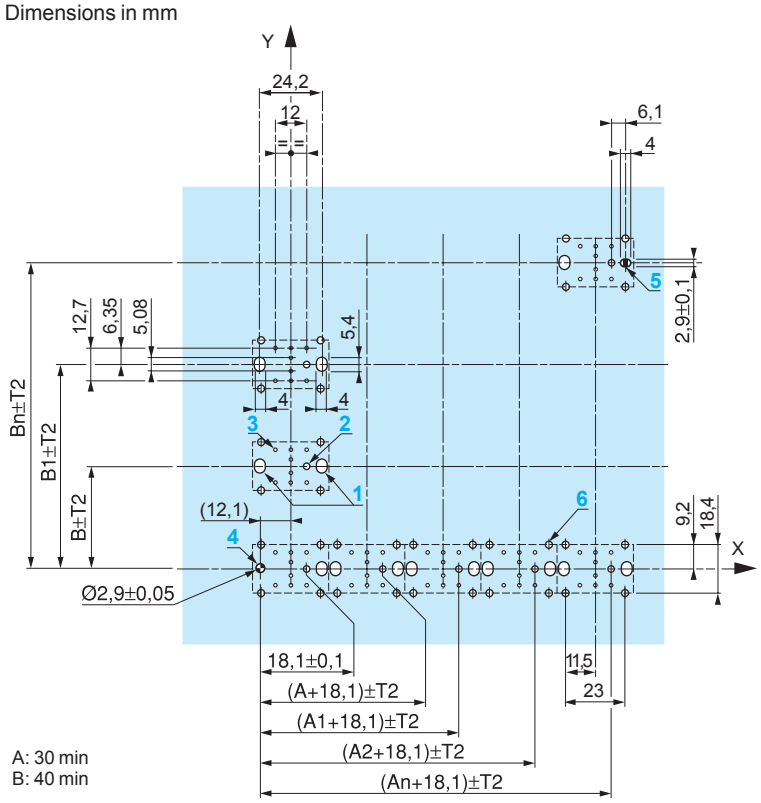

General tolerances of the panel and printed circuit board

The cumulative tolerance must not exceed 0.3 mm: T1 + T2 = 0.3 mm max.

■ Installation precautions:
□ Minimum thickness of circuit board: 1.6 mm.
□ Cut-out diameter: 22.4 mm ± 0.1 mm.
□ Orientation of body/fixing collar ZB5 BZ079: ± 2° 30' (excluding cut-outs marked **a** and **b**).
□ Tightening torque of screws ZBZ 006: 0.6 N.m max.
□ Allow for one ZB5 BZ079 fixing collar/pillar and its fixing screws:
- every 90 mm horizontally (X), and 120 mm vertically (Y),
- with each selector switch head (ZB5 AD●, ZB5 AJ●, ZB5 AG●).

The fixing centres marked **a** and **b** are diagonally opposed and must align with those marked **4** and **5** on the printed circuit board.

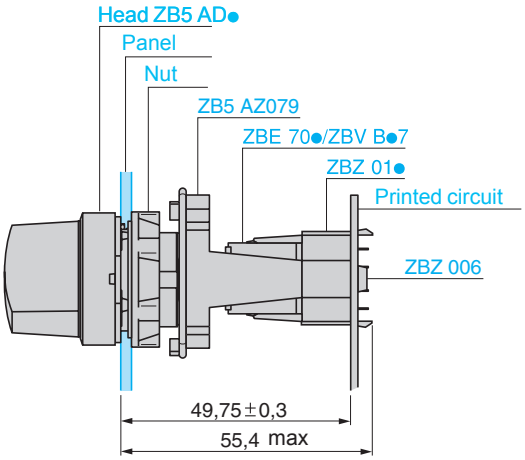

■ Mounting of adapter (socket) ZBZ 01● :

1 2 elongated holes for ZBZ 006 screw access.

2 1 hole Ø 2.4 mm ± 0.05 for centring adapter ZBZ 01●.

3 8 x Ø 1.2 mm holes.

4 1 hole Ø 2.9 mm ± 0.05, for aligning the printed circuit board (with cut-out marked **a**).

5 1 elongated hole for aligning the printed circuit board (with cut-out marked **b**).

6 4 holes Ø 2.4 mm ± 0.05 for clipping in adapter ZBZ 01●.

Dimensions An + 18.1 relate to the Ø 2.4 mm ± 0.05 holes for centring adapter ZBZ 01●.

2

Pit switch boxes

2 x Ø 22 mm cut-outs + 1 x Ø 45 mm cut-out for power socket

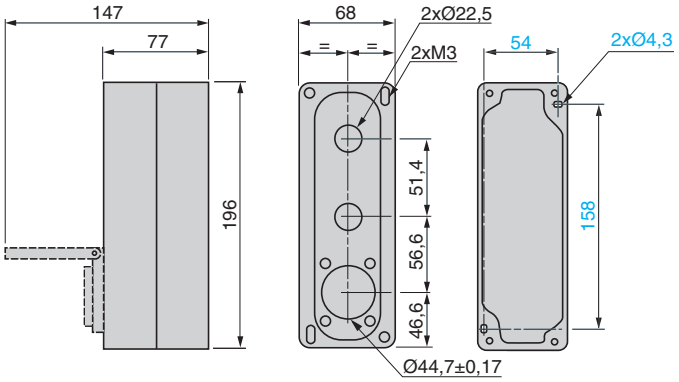

3 x Ø 22 mm cut-outs

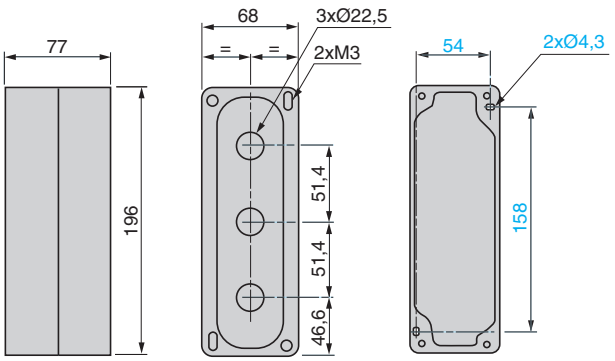

3 x Ø 22 mm cut-outs + 1 x Ø 45 mm cut-out for power socket

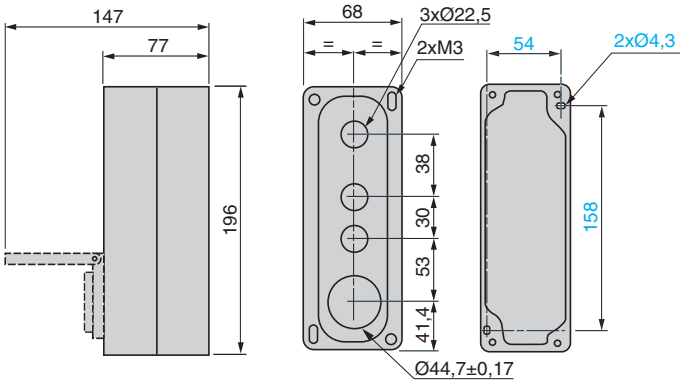

4 x Ø 22 mm cut-outs

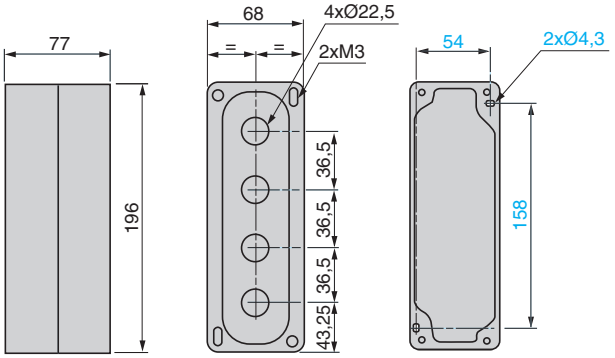

Hoistway boxes

1 x Ø 22 mm cut-out

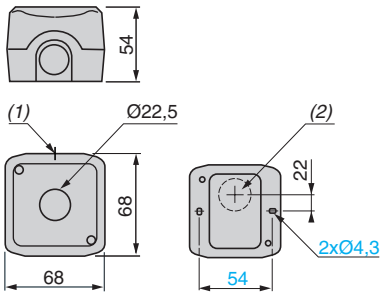

(1) 2 knock-outs for Pg 13.5 cable gland, maximum capacity 12 mm.
(2) Knock-out for cable entry, maximum capacity 14 mm.

Top of car boxes

6 x Ø 22 mm cut-outs + 1 x Ø 45 mm cut-out for power socket

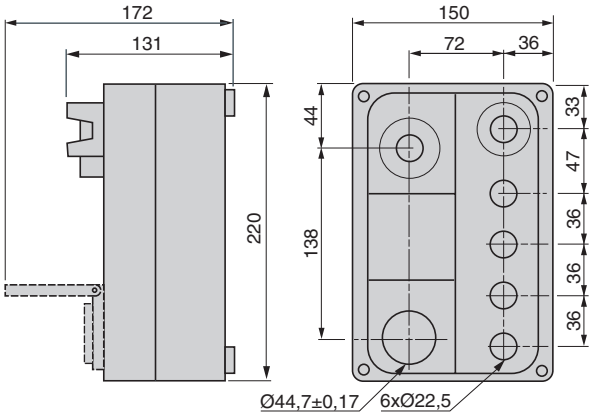

7 x Ø 22 mm cut-outs + 1 x Ø 45 mm cut-out for power socket

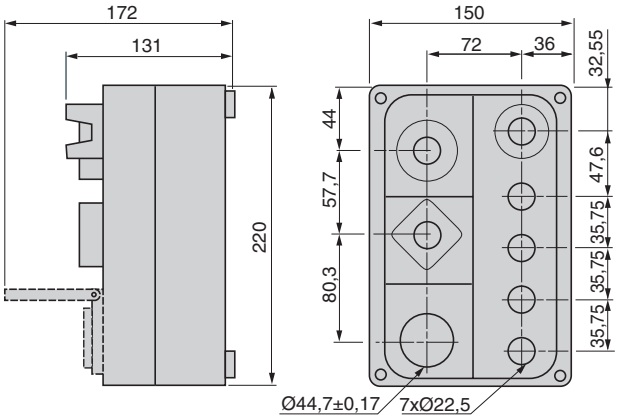

Presentation: page 2/60
Characteristics: page 2/62
References: page 2/65
Mounting: page 2/73

Control and signalling units

ZB5 AA●●●

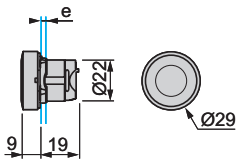

ZB5 AK1●●3

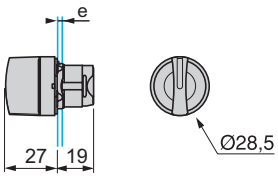

ZB5 AG●

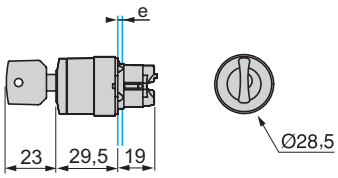

ZB5 AT8643M

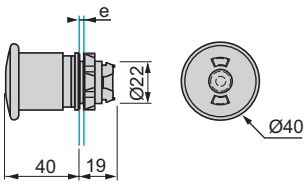

ZB5 AD●

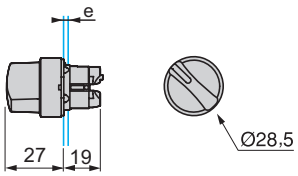

XB7 EV0●●P

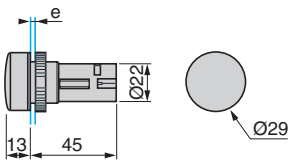

e: panel thickness = 1…6 mm