Polyester Insulating Enclosures

# Thalassa PLS, PLM & PLA

**Boxes, wall-mounting and floor-standing enclosures**

## Catalogue
2012



For outdoor and harsh environment electrical distribution, automation, signalization and IT applications

Schneider Electric

# Insulating enclosures


PB500213


PB500076


PB501353


PB500215


PB500216


PB500078


**Thalassa PLS** Insulating modular boxes 9

**Selection guide** 10

**Dimensions** 12

**Thalassa PLM** Wall-mounting in polyester 20

**Dimensions** 25

**Selection guide** 26

**Thalassa PLA** Floor-standing in polyester 42

**PLA version:** Completely sealed enclosure 44

**PLAT version:** Ventilated canopy 45

**PLAZ version:** Plinth-type open bottom 46

**PLAZT version:** Plinth-type open bottom and ventilated canopy 47

**Dimensions** 48

**Accessories** 50

# Polyester enclosures
## Installation examples


PB501273

Outdoor installation, with exposure to atmospheric conditions: mist, solar radiation, extreme temperatures, etc.

Schneider Electric enclosures made from insulating materials are designed to protect your equipment in harsh environments or in contact with the public:
- Infrastructures: protection against bad weather (solar radiation, rain, etc.), impacts, saline atmospheres, etc.
  - Transport: resistance to UV, salt mist, tightness and impact resistance, etc.
  - Water: resistance to corrosion, resistance to impact and UV, resistance to chemical substances, etc.
  - Outdoor telecom and networks: resistance to UV, resistance to corrosion, protection of 19-inch accessories, etc.
  - Power: resistance to impact, to salt mist, etc.
  - Public lighting: anti-vandalism, anti-posting, UV resistance, etc.
- Industries in aggressive environments: resistance to corrosion, to chemical substances and protection against electrical hazards.

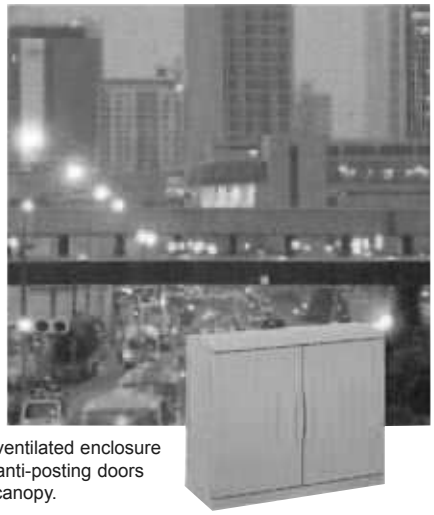
PB501274

Self-ventilated enclosure with anti-posting doors and canopy.


PB501275

Indoor or outdoor installation on industrial zones in aggressive environments.

# Polyester enclosures
## Our solutions


PB500213

### Thalassa PLS boxes

- A range of insulating modular boxes for creating assemblies that separate functions and provide easy visibility thanks to their transparent covers.
- 14 box sizes from 270 × 180 × 180 mm to 720 × 540 × 230 mm.
- Accessories for power, automatism and modular applications.


PB501276

### Thalassa PLM wall-mounting enclosures

- ABS/PC or polyester monobloc enclosure, IP 66, plain and transparent doors with built-in top and bottom canopies allowing the enclosures to be inverted.
- 8 sizes from 310 × 215 × 160 mm to 1056 × 852 × 350 mm.
- Large range of accessories (common with the Spacial 3D universal enclosure) for power, automatism and modular applications.

# Polyester enclosures

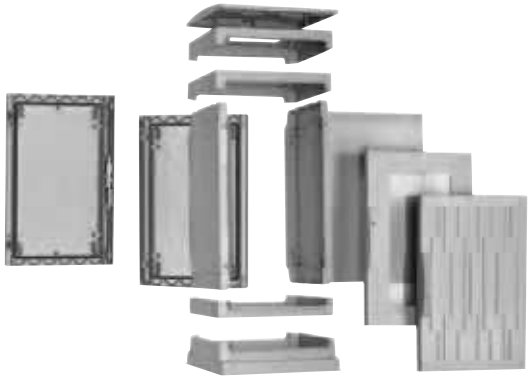
PB501277

## Thalassa PLA floor-standing enclosure

● Modular design, made from polyester, combining:
– 40 sizes.
– 4 versions available, from completely sealed (IP 65) to self-ventilated with canopy and/or open bottom (IP 44 or 54).
– Plain, glazed or anti-posting door.
● The large range of accessories allows it to adapt to all your needs:
– Power distribution.
– Automatism.
– Modular.
– 19".

# Polyester enclosures
## Customised solutions

Configured Specific

### The customised offer anticipates the adaptation needs of the standard offer

### Advantages of our customised offer


PB501280

**Preparation for installation with machining**
Save time on marking out and transport to the machining location, avoid drilling errors with pre-machining of the body, panels and doors.


PB501281

**Save time with pre-installed accessories**
On the polyester floor-standing and wall-mounting enclosures, we can supply or rapidly install a selection of accessories.


PB501282

**Save time with machined accessories**
In order to adapt better to your needs, we can machine the accessories for polyester wall-mounting and floor-standing enclosures, including mounting plate, internal doors, cable-gland plates, etc.


PB501283

**Improve its appearance with colour**
For better integration of your enclosures in their environment or to help identify them, we offer you two solutions:
- Enclosures with colour in the mass, maintenance free (minimum amount required).
- Repainting of standard enclosures.
- Application of anti-graffiti paint.


PB501284

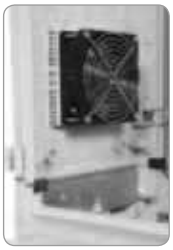
PB501285

**Increase the service life of your equipment**
Installation of the most frequent accessories of the thermal range in the factory.

# Polyester enclosures
## Installation examples

Configured Specific


PB501286

**Machined, coupled and equipped Thalassa PLS boxes**


PB501287

**Thalassa PLM wall-mounting enclosure machined in the factory to accommodate cable glands**


PB501288

**Thalassa PLA floor-standing enclosure with accessories installed in the factory**


PB501289

**Coupled Thalassa PLA floor-standing enclosures with accessories installed ain the factory**

# Polyester enclosures
## Definition help

Specific



PB500450

### Checklist to help define a specific need

You can not find the solution you are looking for in our general catalogue or in the configured offer?
Then you need our specific offer. To optimise your special solution, we will study all the aspects of your project in the checklist below.

| Project profile | |
|---|---|
| Quantity of enclosures | |
| Repetitive request (yes/no) | |
| Rates (number, frequency, amount per rate)? | |

| Environment | |
|---|---|
| Internal or external use? | |
| Type of environment: normal, saline, corrosive (what products?) | |
| Usage constraints (vibrations, etc.). | |

| Technical definition | |
|---|---|
| Product description (drawing, technical specifications) | |
| Dimensions, assemblies | |
| Required IP, IK | |
| Colour, anti-graffiti, anti-posting | |
| Loads to withstand: by the enclosure, by the doors and panels | |
| Cable entry (top, bottom, etc.), IP | |
| Glazed door, window, etc. | |
| Type of lock | |
| Definitions of machining operations (drawings, etc.) | |
| Electrical continuity by earthing braids or others (to be specified) | |
| **Accessories** | |
| Standard accessories installed | |
| Specific accessories to be supplied (plans, drawings, etc.), to be installed | |
| **Other** | |
| Possible reference norms | |
| Classification tests to be planned (for the internal classification plan) mechanical strength, electrical continuity, etc. | |

| Packaging | |
|---|---|
| Is standard packaging sufficient? If not, what type of packaging is required? | |
| Packaging labels (amount, position, type of information)? | |
| Palletisation constraints? | |

# Polyester enclosures
## Customised solutions

Specific

| Choice | | | | | | | |
|---|---|---|---|---|---|---|---|
| For the accessory options, specify whether you want supply or installation | | | | | | | |
| **General options of the basic enclosure** | | | | | | | |
| Quantity | | Dimensions H (mm) | | W (mm) | | D (mm) | |
| Versions | | | | | | | |
| **Choice of fixing or base accessories** | | | | | | | |
| Fixing lugs, type | | | | | | | |
| Plinths, type and size | | | | | | | |
| Post-fixing device, post type | | | | | | | |
| Seats, special structures, etc. | | | | | | | |
| **Body and cable-accessory options** | | | | | | | |
| Cable entry: cable-gland plate, type | | | | | | | |
| Other solutions (brushes, quick entries, cable-glands, etc.) | | | | | | | |
| Cable supporting accessories | | | | | | | |
| Other accessories (power, lighting, etc.) | | | | | | | |
| Definition of the surfaces and the cut-outs (diagrams, drawings, DXF SE diagrams) | | | | | | | |
| **Door and door-accessory options** | | | | | | | |
| Front door, rear door, windows, glazed door | | | | | | | |
| Choice of handle/insert | | | | | | | |
| Door stop, door contact | | | | | | | |
| Document lip, shelves | | | | | | | |
| Cable supporting accessories | | | | | | | |
| Definition of the cut-outs for windows and switchgear (diagrams, drawings, DXF SE diagrams) | | | | | | | |
| **Mounting accessory options** | | | | | | | |
| Metallic mounting plate; plain, microperforated, Telequick, silkscreened | | | | | | | |
| Insulating mounting plate (polyester, bakelite) | | | | | | | |
| Symmetrical, asymmetrical, mixed uprights | | | | | | | |
| With plain or Telequick partial plates | | | | | | | |
| 19” chassis | | | | | | | |
| Depth adjustment | | | | | | | |
| Complementary fixings | | | | | | | |
| Internal door | | | | | | | |
| Cut-outs of the plates, internal doors (diagrams, drawings, DXF SE diagrams) | | | | | | | |

| Thermal | |
|---|---|
| Do you need to cool? Heat? Ventilate? | |
| Have you calculated a heat balance to dimension your solution? | |
| External temperature range | |
| Internal temperature range (operation of the device) | |
| Dissipated power | |
| **Choice of ventilation options** | |
| Ventilation louvres, ventilation grilles | |
| Fan | |
| Thermostat/Hygrostat | |
| Positions, cut-outs (diagrams, drawings, etc.), installed accessories | |

| Logistics | |
|---|---|
| Delivery location, special storage | |
| Specific unloading or delivery mode | |
| Resumption of transport after equipping | |

| Additional remarks | |
|---|---|
| | |
| | |

# Insulating modular boxes

## Modular

The dimensions of the sides, multiples of 9 cm, allow the creation of assemblies.

## Protection

- IP 65.
- Gasket between body and cover.

## Choice

- 14 sizes.
- 9 combinations of length × width.
- 2 cover heights.
- Transparent cover.
- Opaque cover made from polycarbonate or polyester.

## Industry or infrastructure

- Energy, automatism.
- Accessories for modular distribution.




## Safety

- Full insulation for class II equipment.
- Locking with 4, 6 or 8 points.

## Easy

Bosses with inserts, at the rear of the body, for fixing plates or various supports.

## Customisation

- Various machining operations of the rear and the cover.
- Option of colour in the mass.

# IP 65 insulating modular boxes
## Introduction




- The product references show the two lateral dimensions in cm.
- 14 sizes of insulating boxes; the sides are multiples of 9 cm.
- Insulating boxes that can be coupled by all their side surfaces, allowing the creation of the greatest variety of modular assemblies.
- Rear made from polyester reinforced with fibreglass, moulded by hot compression, 9 sizes.
- 3 types of cover available according to the sizes:
  – Standard cover, made from transparent polycarbonate with neoprene gasket, 45 mm high, or 95 mm high (final index A) according to the sizes.
  – Opaque polycarbonate cover (index C), with neoprene gasket, 45 mm high, or 95 mm high (final index A) according to the sizes.
  – Polyester cover (index P) with PUR gasket, 45 mm high.
- The rears (prefix F) and the covers (prefix T) are supplied separately as standard references. The separate covers are supplied without locking screws or sealing accessories.
- The PLS enclosures with transparent cover are also offered in batches; the reference refers to the complete batch.

### Technical characteristics

- Degree of protection: IP 65.
- Resistance to external mechanical impacts: IK 09.
- RAL 7032 grey colour (opaque rears and cover).
- Excellent resistance to corrosion; can withstand most chemical agents.
- Full insulation to create class II assemblies.
- Standard lock with slot screws outside the volume of the boxes. Delivered with sealing system.
- External wall mounting by 4 lugs, to be ordered separately.
- Service temperature: – 30 to + 120 °C.
- Bosses with M6 inserts for fixing the mounting plate.
- Halogen-free and compliant with the RoHS directive.
- Certification according to standard IEC 62208, guaranteeing IP, IK, resistance to heat and fire (self-extinguishing), insulation to 5000 V, resistance to bad weather and load of the mounting plate, 100 kg/m$^2$.
- UL certification and NEMA classification 4X and 13.

### Selection guide




| Dimensions (mm) | | | Complete box | | | Complete boxes in batches | |
|---|---|---|---|---|---|---|---|
| Height | Width | Depth | Transparent cover | Opaque cover | Polyester cover | Transparent cover | Amount per batch |
| 180 | 270 | 180 | **NSYPLS1827** | **NSYPLSC1827** | **NSYPLSP1827** | **NSYPLS1827L** | 56 |
| 270 | 270 | 180 | **NSYPLS2727** | **NSYPLSC2727** | **NSYPLSP2727** | **NSYPLS2727L** | 56 |
| 270 | 270 | 230 | **NSYPLS2727A** | **NSYPLSC2727A** | | **NSYPLS2727AL** | 56 |
| 270 | 360 | 180 | **NSYPLS2736** | **NSYPLSC2736** | **NSYPLSP2736** | **NSYPLS2736L** | 56 |
| 270 | 360 | 230 | **NSYPLS2736A** | **NSYPLSC2736A** | - | **NSYPLS2736AL** | 56 |
| 270 | 540 | 180 | **NSYPLS2754** | **NSYPLSC2754** | **NSYPLSP2754** | **NSYPLS2754L** | 28 |
| 270 | 540 | 230 | **NSYPLS2754A** | **NSYPLSC2754A** | - | **NSYPLS2754AL** | 28 |
| 360 | 360 | 180 | **NSYPLS3636** | **NSYPLSC3636** | **NSYPLSP3636** | **NSYPLS3636L** | 28 |
| 360 | 540 | 180 | **NSYPLS3654** | **NSYPLSC3654** | **NSYPLSP3654** | **NSYPLS3654L** | 28 |
| 360 | 540 | 230 | **NSYPLS3654A** | **NSYPLSC3654A** | - | **NSYPLS3654AL** | 28 |
| 360 | 720 | 230 | **NSYPLS3672A** | **NSYPLSC3672A** | - | **NSYPLS3672AL** | 27 |
| 540 | 540 | 180 | **NSYPLS5454** | **NSYPLSC5454** | **NSYPLSP5454** | **NSYPLS5454L** | 14 |
| 540 | 540 | 230 | **NSYPLS5454A** | **NSYPLSC5454A** | - | **NSYPLS5454AL** | 14 |
| 540 | 720 | 230 | **NSYPLS5472A** | **NSYPLSC5472A** | - | **NSYPLS5472AL** | 14 |

# IP 65 insulating modular boxes
## Introduction

### Selection guide for rears and covers (without screws)


PB501291


PB501292


PB501293


PB501293


PB501294


PB501295

| Dimensions (mm) | | Rear 135 mm | Low covers | | | High covers | |
|---|---|---|---|---|---|---|---|
| Height | Width | | Transparent 45 mm | Opaque 45 mm | Polyester 45 mm | Transparent 95 mm | Opaque 95 mm |
| 180 | 270 | **NSYFPLS1827** | **NSYTPLS1827** | **NSYTPLSC1827** | **NSYTPLSP1827** | - | - |
| 270 | 270 | **NSYFPLS2727** | **NSYTPLS2727** | **NSYTPLSC2727** | **NSYTPLSP2727** | - | - |
| 270 | 270 | **NSYFPLS2727** | - | - | - | **NSYTPLS2727A** | **NSYTPLSC2727A** |
| 270 | 360 | **NSYFPLS2736** | **NSYTPLS2736** | **NSYTPLSC2736** | **NSYTPLSP2736** | - | - |
| 270 | 360 | **NSYFPLS2736** | - | - | - | **NSYTPLS2736A** | **NSYTPLSC2736A** |
| 270 | 540 | **NSYFPLS2754** | **NSYTPLS2754** | **NSYTPLSC2754** | **NSYTPLSP2754** | - | - |
| 270 | 540 | **NSYFPLS2754** | - | - | - | **NSYTPLS2754A** | **NSYTPLSC2754A** |
| 360 | 360 | **NSYFPLS3636** | **NSYTPLS3636** | **NSYTPLSC3636** | **NSYTPLSP3636** | - | - |
| 360 | 540 | **NSYFPLS3654** | **NSYTPLS3654** | **NSYTPLSC3654** | **NSYTPLSP3654** | - | - |
| 360 | 540 | **NSYFPLS3654** | - | - | - | **NSYTPLS3654A** | **NSYTPLSC3654A** |
| 360 | 720 | **NSYFPLS3672** | - | - | - | **NSYTPLS3672A** | **NSYTPLSC3672A** |
| 540 | 540 | **NSYFPLS5454** | **NSYTPLS5454** | **NSYTPLSC5454** | **NSYTPLSP5454** | - | - |
| 540 | 540 | **NSYFPLS5454** | - | - | - | **NSYTPLS5454A** | **NSYTPLSC5454A** |
| 540 | 720 | **NSYFPLS5472** | - | - | - | **NSYTPLS5472A** | **NSYTPLSC5472A** |

### Selection guides for mounting plates


PB500072


PB500102

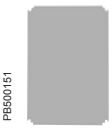
PB500151


PB500103

| For installing in the boxes (mm) | | Metallic mounting plates | | Insulating mounting plates | |
|---|---|---|---|---|---|
| Height | Width | Plain | Telequick | Polyester | Bakelite |
| 180 | 270 | **NSYPMM1827** | **NSYPMR1827** | **NSYPMA1827** | **NSYPMB1827** |
| 270 | 270 | **NSYPMM2727** | **NSYPMR2727** | **NSYPMA2727** | **NSYPMB2727** |
| 270 | 360 | **NSYPMM2736** | **NSYPMR2736** | **NSYPMA2736** | **NSYPMB2736** |
| 270 | 540 | **NSYPMM2754** | **NSYPMR2754** | **NSYPMA2754** | **NSYPMB2754** |
| 360 | 360 | **NSYPMM3636** | - | **NSYPMA3636** | **NSYPMB3636** |
| 360 | 540 | **NSYPMM3654** | **NSYPMR3654** | **NSYPMA3654** | **NSYPMB3654** |
| 360 | 720 | **NSYPMM3672** | **NSYPMR3672** | **NSYPMA3672** | **NSYPMB3672** |
| 540 | 540 | **NSYPMM5454** | **NSYPMR5454** | **NSYPMA5454** | **NSYPMB5454** |
| 540 | 720 | **NSYPMM5472** | **NSYPMR5472** | **NSYPMA5472** | **NSYPMB5472** |

### Selection guides for modular distribution chassis


PB501296

| For installing in the boxes (mm) | | Modular distribution chassis | No. of rows | No. of 18 mm modules |
|---|---|---|---|---|
| Height | Width | Page 17 | | |
| 180 | 270 | **NSYDLS12** | 1 | 12 |
| 270 | 270 | **NSYDLS24** | 2 | 24 |
| 360 | 270 | **NSYDLS242** | 2 | 24 |
| | | **NSYDLS36** | 3 | 36 |
| 540 | 270 | **NSYDLS48** | 4 | 48 |

Modular distribution application offer: box and chassis, see pages **17** and **18**.

# IP 65 insulating modular boxes
## Dimensions

### Dimensions (mm)

The surfaces are numbered to enable identification of the surfaces to be drilled in the customised offer.

**NSYPLS●●●1827**

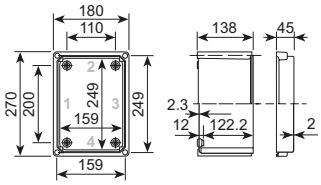


**NSYPLS●●●2727●**

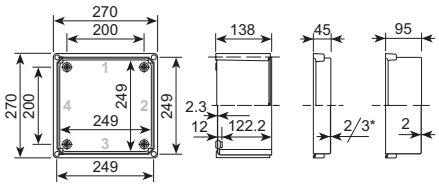


**NSYPLS●●●2736●**

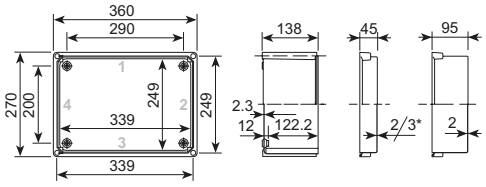


**NSYPLS●●●3636**

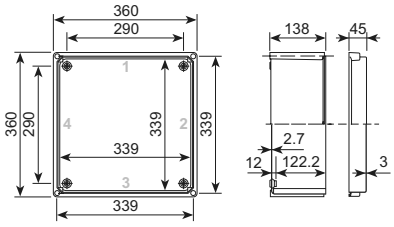


**NSYPLS●●●2754●**

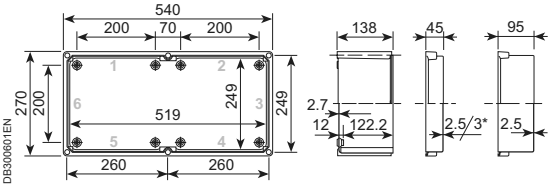


DB300601EN

**NSYPLS●●●3654●**

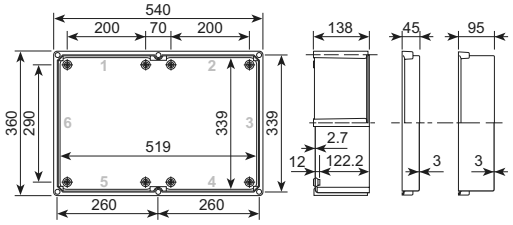


**NSYPLS●●●5454●**

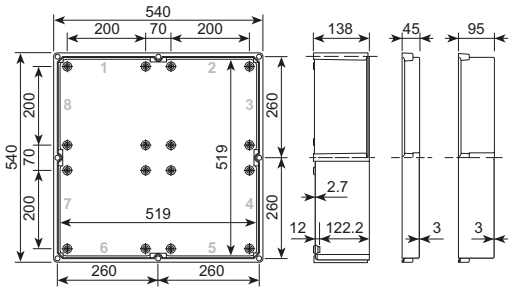


**NSYPLS●●●3672●**

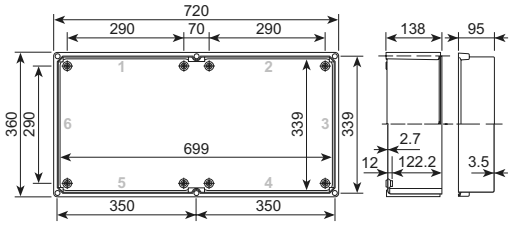


**NSYPLS●●●5472●**

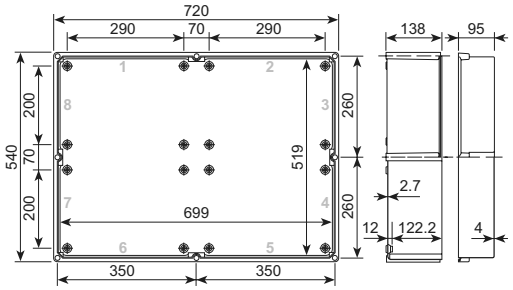


* Thickness of 3 mm for the polyester cover.

**A**

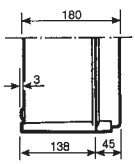


**C**

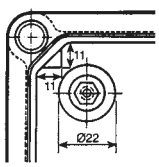


**E**

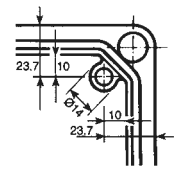


A Bottom and bottom cover.
B Bottom and top cover.
C D Internal view of the corners, details of the bosses with M6 inserts.
E F Internal view of the corners of the poyester covers with bosses for inserts ref. **NSYTEX5** for M5 screws.

**B**

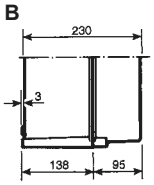


DB300602EN

**D**

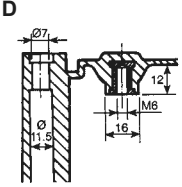


**F**

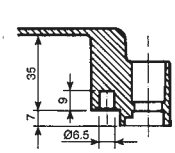

# IP 65 insulating modular boxes
## Accessories

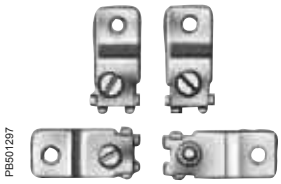
PB501297

### Wall-fixing lugs

- Set of 4 lugs and fixings.
- Material: passivated zinc-coated or stainless steel.

| Name | References |
|---|---|
| Steel mounting lugs | **NSYPF27N** |
| Stainless-steel mounting lugs | **NSYPF27X** |

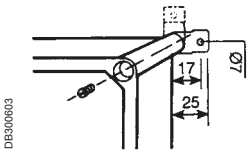

DB300603


PB501298

### Post-fixing device

- Contains all the elements required for mounting on a post.

| For installation on a surface with dimensions (mm) | References |
|---|---|
| 270 | **NSYFSP27270** |
| 360 | **NSYFSP27360** |
| 540 | **NSYFSP27540** |

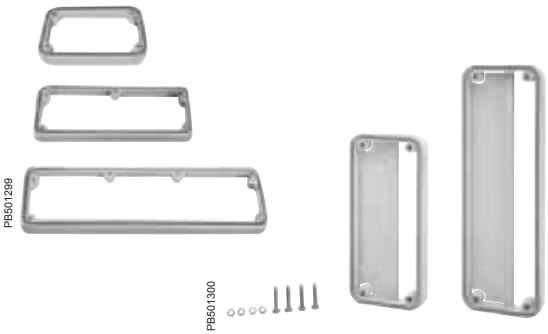


### Coupling frames

- Coupling frame for an opening of 110 mm (for 180 mm surfaces).
- Coupling frame for an opening of 200 mm (for 270 mm surfaces).
- Coupling frame for an opening of 290 mm (for 360 mm surfaces).
- A sealing gasket is built into the frame with full opening to maintain the protection rating of IP 65.
- Frame with partial opening: without gasket and IP 44.

| Opening (mm) | References | |
|---|---|---|
| | Full-opening frame | Partial-opening frame |
| 110 | **NSYUM27180** | - |
| 200 | **NSYUM27270** | **NSYUCC270** (1) |
| 290 | **NSYUM27360** | **NSYUCC360** (1) |

(1) References by unit. Order by multiples of 10 units (10, 20, 30, etc.).


PB501301

### Side plates

- 200 mm cable-gland plate or locking plate for the 270 mm surfaces.
- 290 mm cable-gland plate or locking plate for the 360 mm surfaces.
- IP 65 maintained by a sealing gasket.

| Side plates (mm) | References |
|---|---|
| 200 | **NSYTL27270** |
| 290 | **NSYTL27360** |

# IP 65 insulating modular boxes
## Accessories

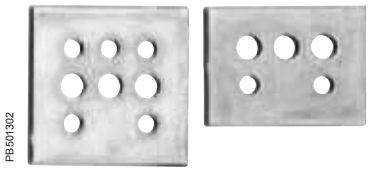
PB501302

### Box coupling unit piece

- For coupling 2, 3 or 4 boxes, with optional wall mounting.
- To be ordered in multiples of 25.

| For coupling | References |
|---|---|
| 2 boxes | **NSYPS2C27** |
| 3 or 4 boxes | **NSYPS4C27** |

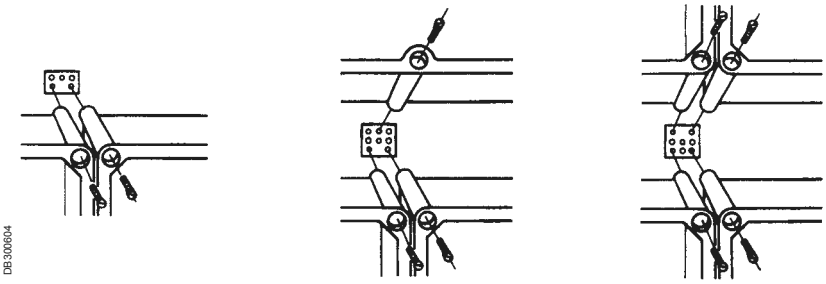
DB300604

M6 × 8 screw with cylindrical head.


PB501303


PB501304

### Hinges

- Set of 2 external hinges made from plastic or internal hinges made from brass.
- To open the door to 180º.

| Name | References |
|---|---|
| External plastic hinges | **NSYBE27** |
| Internal brass hinges | **NSYBL27** |


PB501314

**NSYAE25**


PB501315

**NSYAS25**

### Insulators for busbar

- Ref. **NSYAE25** for 4 bars of 15 or 20 mm. Utilisation on the 270 mm side.
- Ref. **NSYAS25*** for 1 bar of 15, 20 or 30 mm.

* References by unit. Order by multiples of 5 units (5, 10, 15, etc.).

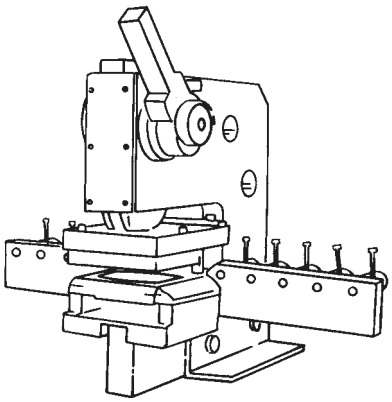
DB300605

Side cut-out press, ref. **NSYPUC27**.

Specific

### Drill holes

- The machining operations on the dimensions of the lateral plates or frames can be specifically produced in our factory.
- The surfaces can be identified by the numbers provided on page **12**.

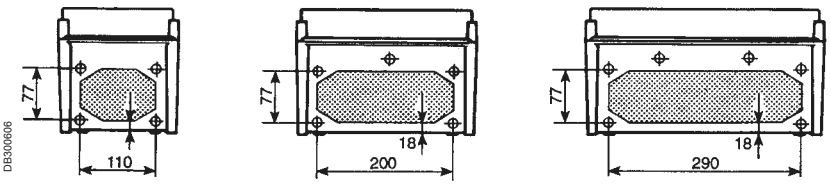

DB300606

# IP 65 insulating modular boxes
## Accessories


PB501305
With slotted head


PB501306
With wings


PB501307
With plumbable triangular head

### Closing for PLS boxes

- Set of 4, 6 or 8 screws.
- Three types of screws are available:
  – With slotted head.
  – With wings.
  – With plumbable triangular head.
- The references also include 4 M6 screws for fixing mounting plates and 2 steel sealing accessories.

| Name | Tool | References |
|---|---|---|
| Set of 4 slotted screws (1) | Flat-blade screwdriver | **NSYTCD274** |
| Set of 6 slotted screws (1) | Flat-blade screwdriver | **NSYTCD276** |
| Set of 8 slotted screws (1) | Flat-blade screwdriver | **NSYTCD278** |
| Set of 4 wing screws (2) | Manual | **NSYTCM274** |
| Set of 6 wing screws (2) | Manual | **NSYTCM276** |
| Set of 8 wing screws (2) | Manual | **NSYTCM278** |
| Set of 4 triangular screws | NSYLT27 | **NSYTCT274** |
| Set of 6 triangular screws | | **NSYTCT276** |
| Set of 8 triangular screws | | **NSYTCT278** |

(1) Included in the standard references of boxes **NSYPLS●●●**.
(2) Included in the standard references of modular distribution boxes **NSYPLS●●●DLS●●●**.


PB501308


PB501309

### Closing locks

- Option of installing a side lock, on the opposite side to where the hinges are installed.

| Name | Tool | References |
|---|---|---|
| Double-bar side lock and handle | NSYDBP | **NSYCL27M** |
| Side lock with key 405 | | **NSYCL27L405** |
| Side lock with key 1242E | | **NSYCL27L1242E** |


PB501310


PB501310

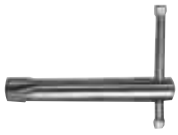
PB501311

### Sealing and opening

| Name | References |
|---|---|
| Plastic-coated sealing triangle* | **NSYPPS27** |
| Triangular key for PLS | **NSYLT27** |

* References by unit. Order by multiples of 10 units (10, 20, 30, etc.).


PB501312

### Plastic carrying handle

| Name | Reference |
|---|---|
| Carrying handle | **NSYATM27** |

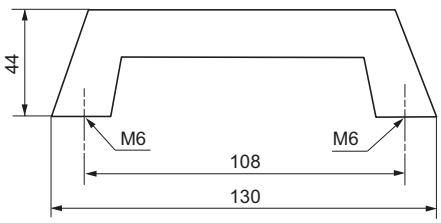

DB300607

# Insulating modular boxes
## Accessories

### Examples of assembly

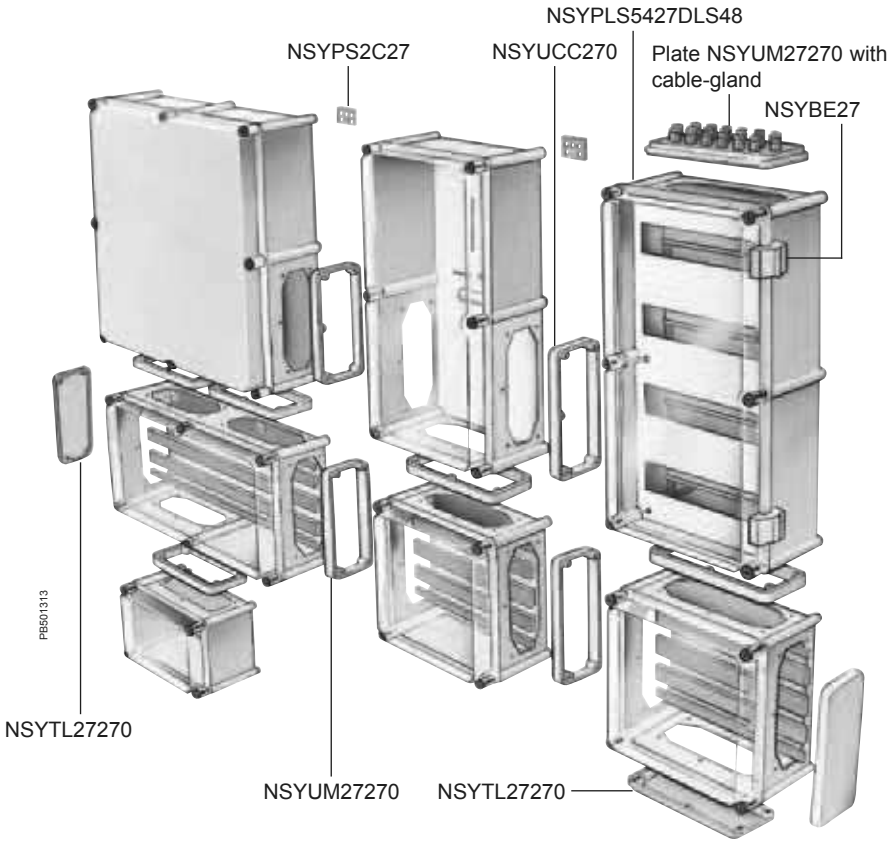


All the boxes can be joined by their lateral surfaces, using the coupling frames **NSYUM•••** or **NSYUCC•••**, and the joining and fixing pieces **NSYPS2C27** and **NSYPS4C27**.

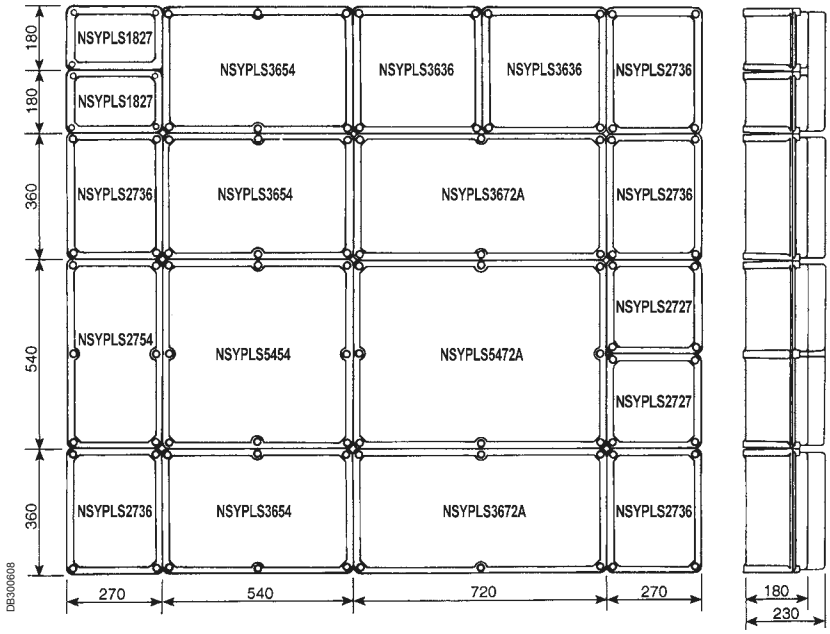

# Insulating modular boxes
## Modular distribution application



PB501316

**NSYPLS5427DLS48**

### Insulating modular boxes with modular distribution chassis

PLS boxes, polyester rear and PC transparent cover with hinges and wing screws for manual opening.
Built-in DLS modular chassis, made up of an insulating protection panel, RAL 7011 colour, 35-mm DIN rails and a 2 × 16 + 5 × 6 mm² neutral/earth connection strip.

- Opening for cable entry, delivered with lock plate, ref. **NSYTL27270**.
- Double-insulating installation.
- Plastic external hinges, allowing opening to 180º.
- Removable 36-mm blanking covers (2 modules): 1 per row in the standard offer.
- The modular chassis can be ordered separately, see references page **11**.

Specific

- The boxes can be equipped with a double-bar lock and handle ref. **NSYCL27M**, or a lock with key ref. **NSYCL27L405**, by specific demand.

# Insulating modular boxes
## Modular distribution application

### Selection guide

| External dimensions (mm) | | | Number of 18 mm modules | Number of rows | Approximate weight (kg) | References |
|---|---|---|---|---|---|---|
| Height (A) | Width (B) | Depth (C) | | | | |
| 180 | 270 | 180 | 12 | 1 | 1.7 | **NSYPLS1827DLS12** |
| 270 | 270 | 180 | 24 | 2 | 2.5 | **NSYPLS2727DLS24** |
| 360 | 270 | 180 | 24 | 2 | 2.7 | **NSYPLS3627DLS24** |
| 360 | 270 | 180 | 36 | 3 | 2.8 | **NSYPLS3627DLS36** |
| 540 | 270 | 180 | 48 | 4 | 3.8 | **NSYPLS5427DLS48** |

### Dimensions (mm)

**NSYPLS1827DLS12**

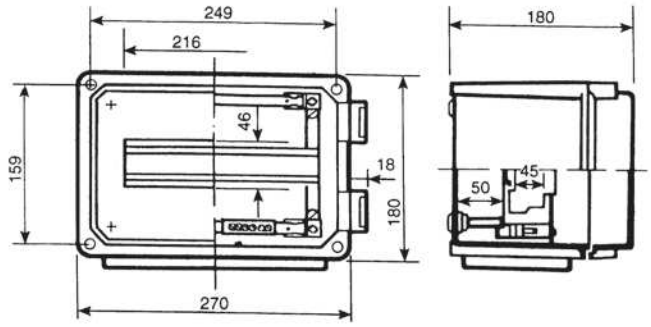


**NSYPLS2727DLS24**

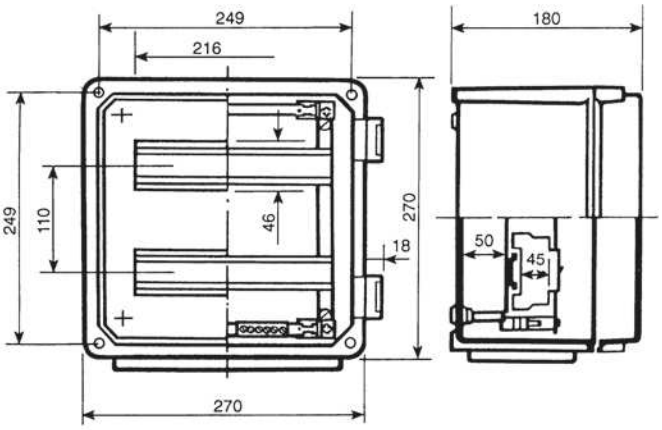


**NSYPLS3627DLS24**

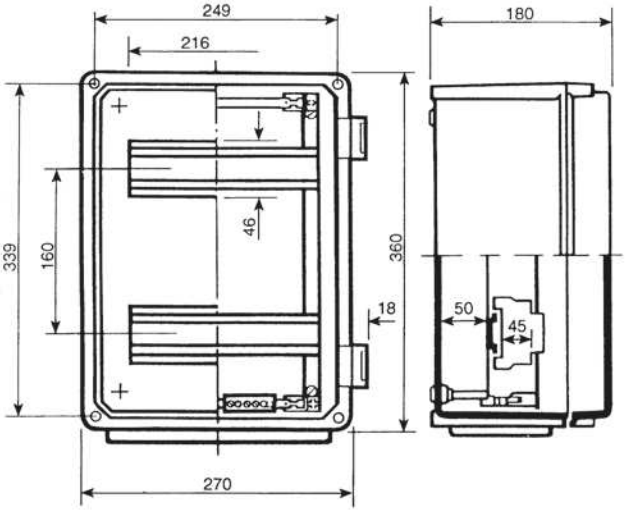


**NSYPLS3627DLS36**

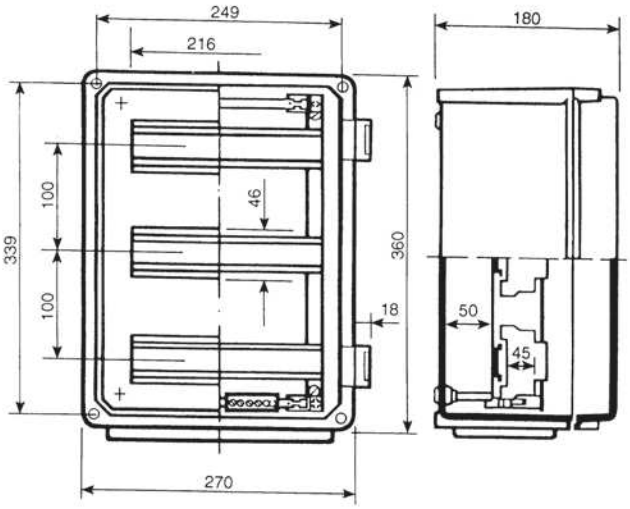


**NSYPLS5427DLS48**

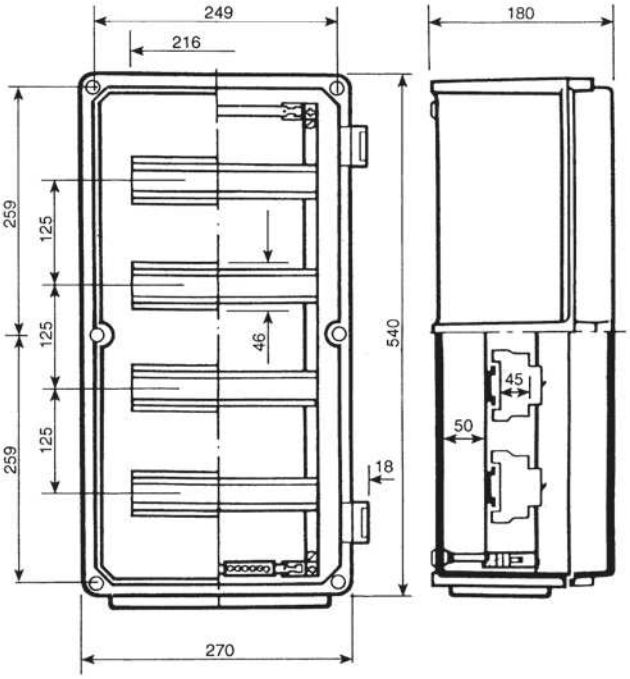


DB300609

# Polyester wall-mounting enclosures

## Service life

High resistance to corrosion in harsh environments, maintaining its mechanical properties and insulation.

## Protection

- IP 66.
- Polyurethane gasket.
- Built-in canopy.
- Lock outside sealed area.

## Choice

- 1 ABS/PC dimension and 7 polyester dimensions.
- Smooth or glazed door.

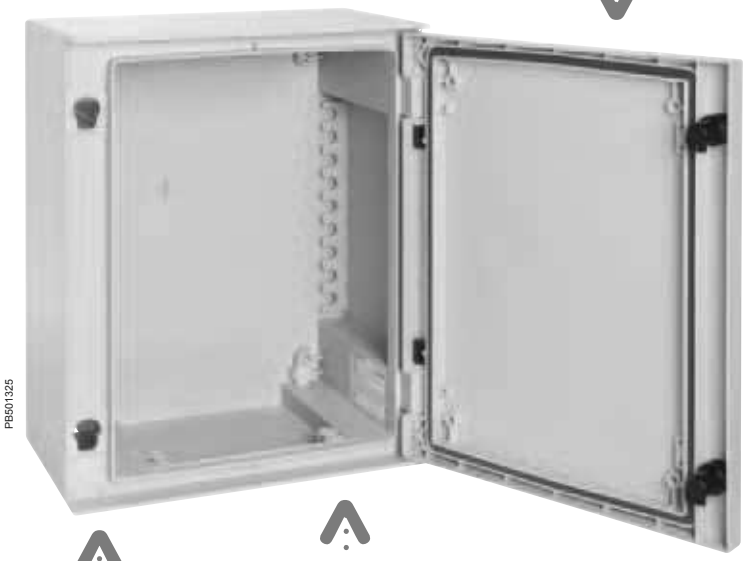


## Easy

- Door easily reversible by turning it over.
- Opening to 120° or 180°.
- Easy machining with no corrosion.
- Lightness.

## Smart

- Notches for easy fixing of DIN rails.
- Grid pattern on the rear of the door for marking the machining operations.

## Customisation

- Configured: machining and accessories.
- Specific: non-standard colour and accessories.

## Safety

- Full insulation (to produce class II units).
- Mechanical strength.
- No risk to the public.

## Applications

- Industry or infrastructures in harsh environments.
- Indoor or outdoor installation.
- Accessories for modular distribution.

## General characteristics of the Thalassa PLM wall-mounting enclosures:

- Indoor or outdoor use.
- 1 size for the ABS/PC wall-mounting enclosure (310 × 215 × 160 mm).
- 7 sizes of polyester wall-mounting enclosures.
- Monobloc body including the canopies (gasket protection), except for wall-mounting enclosure ref. **NSYPLM3025**.
- Doors with polyurethane gasket.
- 2 types of doors.
  – Smooth.
  – Transparent (for the ABS/PC enclosure) or glazed (for the polyester enclosures).
- Reversible door opening direction by turning the enclosure over.
- Degree of protection IP 66 according to standard IEC 60529.
- Impact resistance IK 10 for the plain doors and surfaces and IK 08 for the glazed doors of the polyester versions, according to standard IEC 62262.
- Many accessories in common with the range of steel wall-mounting enclosures, Spacial S3D or Spacial CRN.

## Properties of the material of the polyester versions

The wall-mounting enclosures are made from polyester reinforced with fibreglass, moulded by hot compression, RAL 7032 colour.
This material:

- Is insulating: >15 kV per mm.
- Withstands cold and heat in the range of –50 ºC...+150 ºC.
- Does not soften under intense heat (ball resistance at +150 ºC).
- Is self-extinguishing (does not propagate fire): HB40 classification and self-extinguishing in several seconds during the glow-wire test at 960 ºC –30 sec.
- Does not contain halogens.
- Releases little smoke and no toxic smoke in the event of combustion.
- Is light.
- Can be machined easily.
- Is corrosion-resistant: no rusting, and can withstand many chemical agents.
- Can resist bad weather.

## Characteristics of the production process of the polyester version

The components of the enclosure (body and doors) are moulded by hot compression: the parts have an excellent finish on both sides and can include bosses for accommodating inserts and accessories for mounting or cable management.

## Certificate of conformity with enclosure standard IEC 62208 for:

IP, IK, resistance to heat and fire, insulation 5000 V, resistance to bad weather and corrosion and resistance to internal loads (150 kg/m$^2$) and loads on the door (30 kg/m$^2$).

## UL certification and NEMA classification 4x and 13 for the polyester wall-mounting enclosures

## Total insulation to produce class II units according to IEC 61439-1

## Complies with RoHS and REACH Directives

# ABS/PC wall-mounting enclosures 310 × 215 mm IP 66
## Introduction


PB500144

### Technical characteristics

- Monobloc wall-mounting enclosure made from ABS/PC, RAL 7032 colour.
- Version with transparent polycarbonate door.
- Closes with a 3-mm double-bar lock.
- Door opening: 180°.
- Degree of protection: –35 °C...+90 °C.
- Protection rating IP 66 according to IEC 60529.
- Resistance to external mechanical impacts of IK 10 (20 joules) according to IEC 62262.
- Direct fixing of symmetrical rails ref. **NSYCS200PLM** with plastic nuts ref. **NSYTCSPLM**, to be installed in the notches on the rear of the body, with a pitch of 25 mm.
- Fixing of installation plates on the studs at the rear of the enclosure.
- Back of the door with a 25-mm grid pattern.

| External dimensions (mm) | | | References of wall-mounting enclosures with door | |
|---|---|---|---|---|
| Height | Width | Depth | Plain* | Transparent |
| 310 | 215 | 160 | **NSYPLM32** | **NSYPLM32T** |

*These enclosures are also available equipped with metallic or insulating mounting plates. See summary guide of the references on page **26**.

### Dimensions

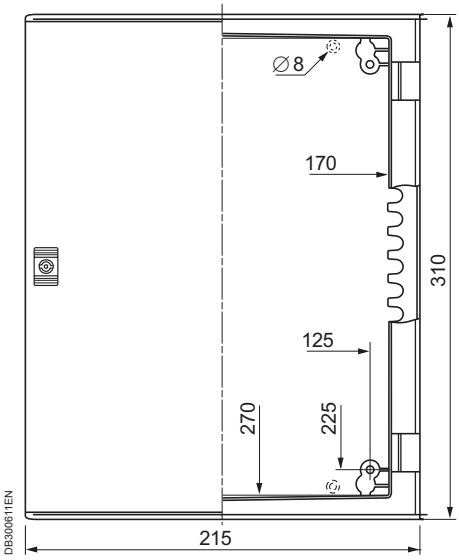


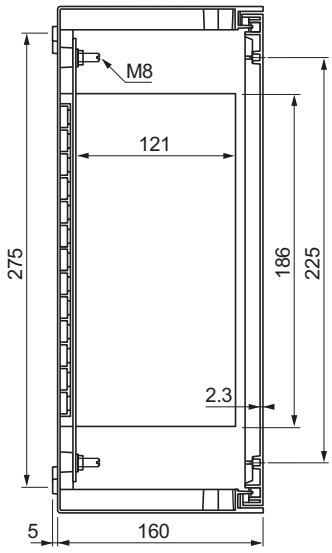


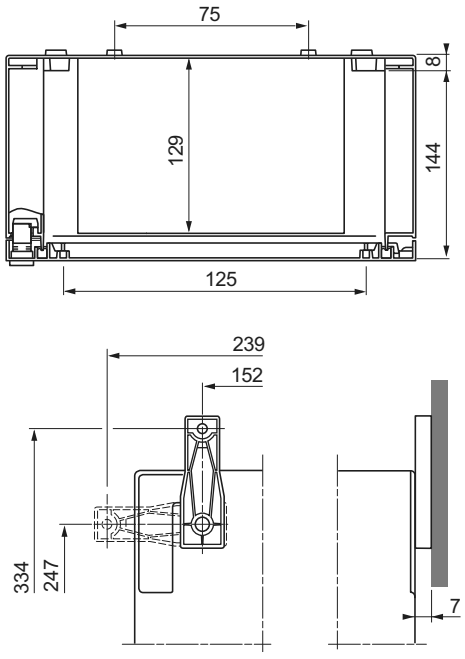

# Polyester wall-mounting enclosures 308 × 255 mm IP 66
## Introduction


PB500145

### Technical characteristics

- Monobloc wall-mounting enclosure made from polyester reinforced with fibreglass, moulded by hot compression, RAL 7032 grey colour.
- Version with transparent tempered-glass door.
- Degree of protection IP 66 according to IEC 60529.
- Resistance to external mechanical impacts:

– Plain door enclosures IK 10 (20 joules).
– Glazed door enclosures IK 08 (5 joules) according to IEC 62262.

- Closes with two 3-mm double-bar locks.
- Door opening angle: 120°.
- Fixing of rear accessories on 4 M8 × 18 studs.
- Grid pattern with a pitch of 50 mm on the back of the door.

| External dimensions (mm) | | | References of wall-mounting enclosures with door | |
|---|---|---|---|---|
| Height | Width | Depth | Plain* | Transparent |
| 308 | 255 | 160 | **NSYPLM3025** | **NSYPLM3025T** |

*These enclosures are also available equipped with metallic or insulating mounting plates. See summary guide of the references on page **26**.

### Dimensions

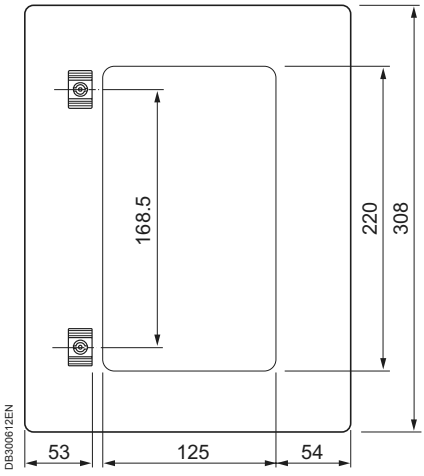


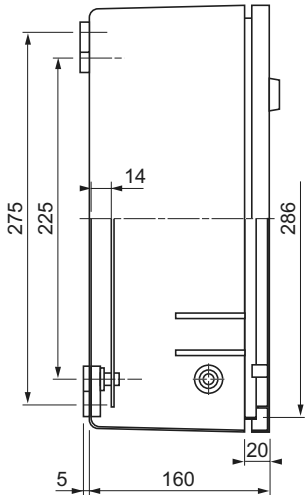


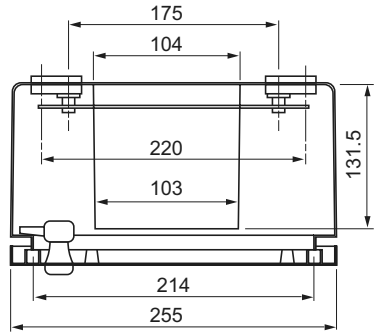


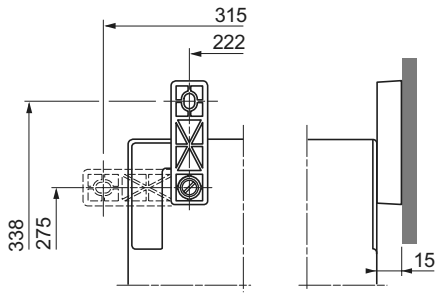

# Polyester wall-mounting enclosures IP 66
## Introduction


PB501325

### Technical characteristics

- Monobloc wall-mounting enclosure made from polyester reinforced with fibreglass, moulded by hot compression, RAL 7032 grey colour.
- Version with transparent tempered-glass door.
- Degree of protection IP 66 according to IEC 60529.
- Resistance to external mechanical impacts:
  – Plain door enclosures IK 10 (20 joules).
  – Glazed door enclosures IK 08 (5 joules) according to IEC 62262.
- Locking device outside the sealed area, guaranteeing the tightness of IP 66 over time.
- Locking system:
  – Enclosure height ≤ 847 mm: 2 locks with double-bar insert or 1 handle with key lock and 3-point closure.
  – Enclosure height 1056 mm: 1 lock with double-bar insert and 4-point closure.
- Door opening angle: 180°.
- Bosses for accessory-fixing inserts: M6 inside the enclosure, M5 in the door for enclosure heights of 430 and 530 mm, M6 in the door for enclosure heights ≥ 647 mm.
- Fixing of rear accessories on 4 M8 studs, included in the standard supply.
- Direct fixing of symmetrical rails ref. **NSYCS●●●PLM**, with plastic nuts, ref. **NSYTCSPLM**, to be installed in the notches on the rear of the body, with a pitch of 25 mm.
- Grid pattern with a pitch of 25 mm on the back of the door.


PB501326

Built-in canopy protecting the door and the sealing gasket.
Two double-bar 3 mm locks outside the sealed zone.


PB501327

Polyamide hinge pin, easily removable and captive.


PB500146


PB501328


PB500147


PB501329

| External dimensions (mm) | | | References of wall-mounting enclosures with door | | | |
|---|---|---|---|---|---|---|
| **Height** (A) | **Width** (B) | **Depth** (C) | **Plain** (3) | **Plain** (1) | **Transparent** | **Transparent** (1) |
| 430 | 330 | 200 | **NSYPLM43** | **NSYPLM43V** | **NSYPLM43T** | **NSYPLM43TV** |
| 530 | 430 | 200 | **NSYPLM54** | **NSYPLM54V** | **NSYPLM54T** | **NSYPLM54TV** |
| 647 | 436 | 250 | **NSYPLM64** | **NSYPLM64V** | **NSYPLM64T** | **NSYPLM64TV** |
| 747 | 536 | 300 | **NSYPLM75** | **NSYPLM75V** | **NSYPLM75T** | **NSYPLM75TV** |
| 847 | 636 | 300 | **NSYPLM86** | **NSYPLM86V** | **NSYPLM86T** | **NSYPLM86TV** |
| 1056 | 852 | 350 | **NSYPLM108** (2) | - | **NSYPLM108T** (2) | - |

(1) Wall-mounting enclosure with handle and lock with 3-point closure and key 1242 E delivered as standard.
(2) Wall-mounting enclosure with standard 5 mm double-bar lock and lock with 4-point closure.
(3) These enclosures are also available equipped with metallic or insulating mounting plates. See summary guide of the references table on page **26**.

# Polyester wall-mounting enclosures IP 66
## Dimensions

A: Height
B: Width
C: Depth

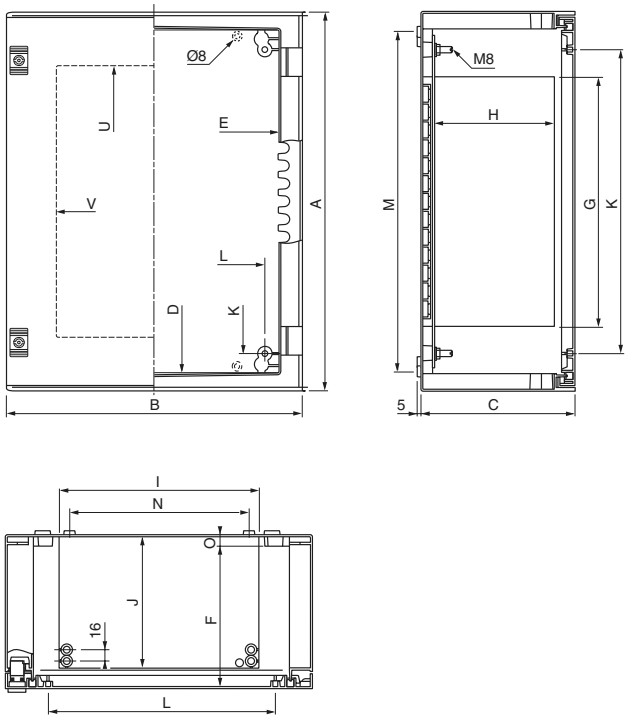


| Dimensions (mm) | | | | | | | | | | Bottom screw and door bosses (mm) | | Internal fixing (m) | | | References |
|---|---|---|---|---|---|---|---|---|---|---|---|---|---|---|---|
| A | B | C | D | E | F | G | H | I | J | K | L | M | N | O | |
| 430 | 330 | 200 | 380 | 260 | 181 | 247 | 150 | 179 | 168 | 325 | 225 | 375 | 150 | 13 | **NSYPLM43** |
| 530 | 430 | 200 | 480 | 360 | 181 | 347 | 150 | 279 | 168 | 425 | 325 | 475 | 250 | 13 | **NSYPLM54** |
| 647 | 436 | 250 | 580 | 360 | 228 | 388 | 192 | 279 | 212 | 525 | 325 | 575 | 250 | 13 | **NSYPLM64** |
| 747 | 536 | 300 | 680 | 460 | 278 | 487 | 241 | 379 | 261 | 625 | 425 | 675 | 350 | 15 | **NSYPLM75** |
| 847 | 636 | 300 | 780 | 560 | 278 | 587 | 241 | 479 | 261 | 725 | 525 | 775 | 450 | 15 | **NSYPLM86** |
| 1056 | 852 | 350 | 980 | 760 | 327 | 775 | 280 | 680 | 300 | 925 | 725 | 975 | 650 | 15 | **NSYPLM108** |

| Glazed door opening (mm) | | References | Glazed door opening (mm) | | References |
|---|---|---|---|---|---|
| U | V | | U | V | |
| 273 | 194 | **NSYPLM43T** | 273 | 151 | **NSYPLM43TV** |
| 373 | 294 | **NSYPLM54T** | 373 | 251 | **NSYPLM54TV** |
| 463 | 294 | **NSYPLM64T** | 463 | 252 | **NSYPLM64TV** |
| 563 | 394 | **NSYPLM75T** | 563 | 352 | **NSYPLM75TV** |
| 663 | 494 | **NSYPLM86T** | 663 | 452 | **NSYPLM86TV** |
| 854 | 661 | **NSYPLM108T** | | | |

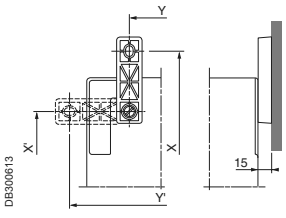


| External fixing with lugs (mm) | | | | References |
|---|---|---|---|---|
| Vertical | | Horizontal | | |
| X | Y | X' | Y' | |
| 490 | 225 | 355 | 360 | **NSYPLM43** |
| 590 | 325 | 455 | 460 | **NSYPLM54** |
| 690 | 330 | 555 | 465 | **NSYPLM64** |
| 790 | 430 | 655 | 565 | **NSYPLM75** |
| 890 | 530 | 755 | 665 | **NSYPLM86** |
| 1090 | 750 | 955 | 885 | **NSYPLM108** |

# Polyester wall-mounting enclosure
## Selection guide

### Summary guide of the references


PB500144


PB500146


PB500147


PB501264


PB501265

| External dimensions (mm) | | | ABS/PC wall-mounting enclosures IP 66 | | Polyester wall-mounting enclosures IP 66 | | | | Wall-mounting enclosures with plain door and mounting plate (1) | |
|---|---|---|---|---|---|---|---|---|---|---|
| H | W | D | Plain door | Transp. door | Plain door | Transp. door | Plain door 3-point closure | Transp. door 3-point closure | Plain | Bakelite |
| | | | Page 22 | | Page 23 and 24 | | Page 24 | | | |
| 310 | 215 | 160 | **NSYPLM32** | **NSYPLM32T** | - | - | - | - | **NSYPLM32P** | **NSYPLM32B** |
| 308 | 255 | 160 | - | - | **NSYPLM3025** | **NSYPLM3025T** | - | - | **NSYPLM3025P** | **NSYPLM3025B** |
| 430 | 330 | 200 | - | - | **NSYPLM43** | **NSYPLM43T** | **NSYPLM43V** | **NSYPLM43TV** | **NSYPLM43P** | **NSYPLM43B** |
| 530 | 430 | 200 | - | - | **NSYPLM54** | **NSYPLM54T** | **NSYPLM54V** | **NSYPLM54TV** | **NSYPLM54P** | **NSYPLM54B** |
| 647 | 436 | 250 | - | - | **NSYPLM64** | **NSYPLM64T** | **NSYPLM64V** | **NSYPLM64TV** | **NSYPLM64P** | **NSYPLM64B** |
| 747 | 536 | 300 | - | - | **NSYPLM75** | **NSYPLM75T** | **NSYPLM75V** | **NSYPLM75TV** | **NSYPLM75P** | **NSYPLM75B** |
| 847 | 636 | 300 | - | - | **NSYPLM86** | **NSYPLM86T** | **NSYPLM86V** | **NSYPLM86TV** | **NSYPLM86P** | **NSYPLM86B** |
| 1056 | 852 | 350 | - | - | **NSYPLM108** | **NSYPLM108T** | - | - | - | **NSYPLM108B** |

(1) Not mounted.

### Summary guide of the characteristics

| References | NSYPLM32 | NSYPLM3025 | NSYPLM43/54/64/75/86 | NSYPLM108 |
|---|---|---|---|---|
| Dimensions (mm) | 310 × 215 × 160 | 308 × 255 × 160 | 430 × 330 × 200 to 847 × 636 × 300 | 1056 × 852 × 350 |
| Material | ABS/PC | Polyester | Polyester | Polyester |
| Degree of protection | IP 66 | IP 66 | IP 66 | IP 66 |
| Impact protection (1) | IK 10 | IK 10 | IK 10 | IK 10 |
| Built-in canopy | Yes | No | Yes | Yes |
| Lock (2) | 1 | 2 | 2 | 1 (4-point closure) |
| Closing with handle (3) | - | - | 1 (3-point closure) | - |
| Lock outside the sealed area | No | No | Yes | Yes |
| Door opening | 180° | 120° | 180° | 180° |
| Notches every 25 mm (4) | Yes | No | Yes | Yes |
| Grid pattern on the back of the door | 25 mm | 50 mm | 25 mm | 25 mm |

(1) IK 08 glazed door of the polyester enclosures.
(2) With double-bar insert.
(3) Handle with insert for key 1242 E.
(4) Notches in the rear of the enclosure for quick installation of DIN rails.


Specific


Configured

Wall-mounting enclosures with polyester mounting plate, machined or not, see customised offer.

# Polyester wall-mounting enclosure
## Selection guide

### Mounting accessories


PB500072

PB500100
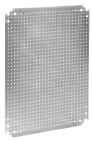
PB500101

PB500102

PB500103

PB500151

PB500152

PB500153

PB500154

| External dimensions of the enclosures (mm) | | | Metallic mounting plates | | | | Insulating mounting plates | | Modular distribution chassis | Step slides | Symmetrical DIN rail |
|---|---|---|---|---|---|---|---|---|---|---|---|
| H | W | D | Plain | Silkscreened | Microperforated | Telequick | Bakelite | Polyester | Page 37 | Page 34 | Page 34 |
| 310 | 215 | 160 | NSYMM32 | - | - | NSYMR32 | NSYMB32 | NSYMPP32 | - | - | NSYCS200PLM |
| 308 | 255 | 160 | NSYMM3025 | - | - | NSYMR3025 | NSYMB3025 | NSYMPP3025 | NSYDLPLM18 | - | - |
| 430 | 330 | 200 | NSYMM43 | NSYMS43 | NSYMF43 | NSYMR43 | NSYMB43 | NSYMPP43 | NSYDLA24 | NSYDPLM200 | NSYCS300PLM |
| 530 | 430 | 200 | NSYMM54 | NSYMS54 | NSYMF54 | NSYMR54 | NSYMB54 | NSYMPP54 | NSYDLA48 | NSYDPLM200 | NSYCS400PLM |
| 647 | 436 | 250 | NSYMM64 | NSYMS46 | NSYMF64 | NSYMR64 | NSYMB64 | NSYMPP64 | NSYDLA48P | NSYDPLM250 | NSYCS400PLM |
| 747 | 536 | 300 | NSYMM75 | NSYMS75 | NSYMF75 | NSYMR75 | NSYMB75 | NSYMPP75 | NSYDLA66 and NSYDLA88 | NSYDPLM300 | NSYCS500PLM |
| 847 | 636 | 300 | NSYMM86 | NSYMS86 | NSYMF86 | NSYMR86 | NSYMB86 | NSYMPP86 | NSYDLA84 and NSYDLA112 | NSYDPLM300 | NSYCS600PLM |
| 1056 | 852 | 350 | NSYMM108 | - | NSYMF108 | NSYMR108 | NSYMB108 | NSYMPP108 | NSYDLA234 | NSYDPLM350 | NSYCS800PLM |

### Main accessories

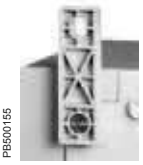
PB500155

PB500156

PB500157
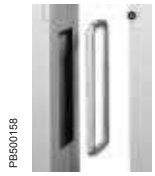
PB500158

PB500159

PB500160

PB500161

| External dimensions (mm) | | | Fixing lugs | Post-fixing device | Floor-mounting pillar | Coupling frame | Cable-gland plate | Internal door | Blanking plates |
|---|---|---|---|---|---|---|---|---|---|
| H | W | D | Page 30 | Page 30 | Page 29 | Page 29 | Page 29 | Page 31 | Page 30 |
| 310 | 215 | 160 | NSYPFPLM32 | - | - | - | - | - | NSYCEPLMA |
| 308 | 255 | 160 | NSYPFPLM | - | - | - | - | NSYPA3025PLM | - |
| 430 | 330 | 200 | NSYPFPLM | NSYSFP300 | - | - | - | NSYPAP43 | NSYCEPLMB |
| 530 | 430 | 200 | NSYPFPLM | NSYSFP400 | NSYSFSPLM | - | - | NSYPAP54 | NSYCEPLMB |
| 647 | 436 | 250 | NSYPFPLM | NSYSFP400 | NSYSFSPLM | - | - | NSYPAP64 | NSYCEPLMC |
| 747 | 536 | 300 | NSYPFPLM | NSYSFP500 | - | NSYBUPLM | NSYTLA4420 | NSYPAP75 | NSYCEPLMC |
| 847 | 636 | 300 | NSYPFPLM | NSYSFP600 | - | NSYBUPLM | NSYTLA4420 | NSYPAP86 | NSYCEPLMC |
| 1056 | 852 | 350 | NSYPFPLM | - | - | NSYBU108PLM | NSYTLA6420 | NSYPAP108 | - |

**Document pocket**

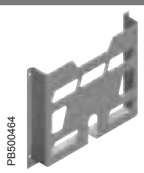
PB500464

**Water drain plug**


PB500162

Page 35

**Rail-fixing nuts**

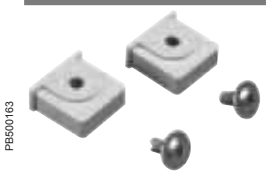
PB500163

Page 34

**Ventilation louvre**


PB500164

Page 35

# Composition accessories
## Base accessories


PB501746


PB501747

## ZM plinth for PLM enclosure

Designed to support and raise enclosures NSYPLM75, NSYPLM86 and NSYPLM108.
- Polyester material reinforced with fibreglass, moulded by hot compression.
- Guarantees total insulation according to IEC 61439-1.
- Ensures a degree of protection of IP 44 and impact resistance of IK 10.
- Plinth height of 200 mm; stackable to obtain a 400-mm plinth.
- Four floor-attachment points; the symmetry of the parts prevents incorrect assembly.

The frontal parts of the plinth (front and rear) have two stainless-steel screws protected by a plastic cap; these screws make it possible (using an Allen key) to open and remove the frontal parts for easier cable installation.
In stacked position, the bottom plinth can be partially buried.
It is provided with one transverse reinforcement rail, adjustable to adapt to the position of the cables.
The reference of the plinth contains all the accessories required for attaching the enclosure to the plinth and for stacking two plinths.

| For enclosure | | | | Plinth | | | | Cabling area | |
|---|---|---|---|---|---|---|---|---|---|
| Height | Width | Depth | Reference | Height | Width | Depth | Reference | Width | Depth |
| 747 | 536 | 300 | **NSYPLM75** | 200 | 456 | 302 | **NSYZM253** | 256 | 252 |
| 847 | 636 | 300 | **NSYPLM86** | 200 | 556 | 302 | **NSYZM263** | 356 | 252 |
| 1056 | 852 | 350 | **NSYPLM108** | 200 | 772 | 352 | **NSYZM283** | 572 | 302 |


PB501748

## Cable supporting cross-rail

The lateral sides of the plinths are provided with bosses for attaching cross-rails with cut-out profiles, for supporting cables.
The reference of the cross-rail includes all the elements required for assembly.

| For plinth | Cross-rail |
|---|---|
| NSYZM253 | **NSYAC280** |
| NSYZM263 | **NSYAC360** |
| NSYZM283 | **NSYAC600** |

## Kit for IP 54

Makes it possible to obtain IP 54 for the plinth and the plinth-enclosure coupling.
Ref. **NSYAEPZM**.


PB501749

## Feet for partially buried installation

Allows the partially buried installation of plinths before completion of the floor. The plinths are attached by four feet with a standard length of 750 mm.
Possibility of horizontal adjustment of the plinth.
The reference includes a kit made up of four feet and fixings.
Ref. **NSYAEBFZ**.

# Composition accessories


PB500158

## Coupling accessories

### Coupling frame

- Allows the lateral coupling of 2 enclosures.
- Polyester frame, RAL 7032 colour and fixings.
- A built-in sealing gasket guarantees a protection rating of IP 66.

| External dimensions (mm) | Entry | For wall-mounting enclosure | References |
|---|---|---|---|
| 435 × 185 × 15 | 398 × 148 | **NSYPLM75** and **NSYPLM86** | **NSYBUPLM** |
| 635 × 185 × 15 | 598 × 148 | **NSYPLM108** | **NSYBU108PLM** |

## Base accessories


PB501333

### Floor-mounting pillar

- To protect cables entering the enclosure in outdoor installations.
- Material: polyester reinforced with fibreglass. RAL 7032 grey colour.
- Delivered with steel frame for secure fixing to the floor.
- Cable entry section: 165 × 100 mm.
- For enclosures ref. **NSYPLM54**, **NSYPLM54T**, **NSYPLM64** and **NSYPLM64T**.

| Name | Reference |
|---|---|
| Floor-mounting pillar | **NSYSFSPLM** |

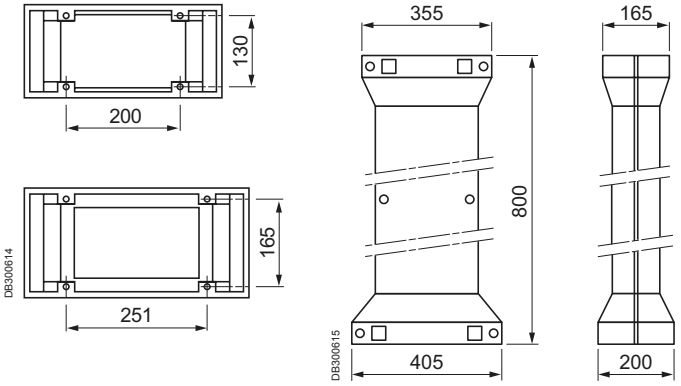


## Cable-entry accessories


PB500159

### Cable-gland plates

- Material: polyester.
- Dimensions: 435 × 185 mm and 635 × 185 mm.

| For wall-mounting enclosures | References |
|---|---|
| NSYPLM75 and NSYPLM86 | **NSYTLA4420** |
| NSYPLM108 | **NSYTLA6420** |

# Composition accessories
## Fixing accessories


PB501330

The enclosures can be mounted directly on the walls. The seals and caps supplied as standard with the enclosure guarantee that it maintains its degrees of protection and insulation.


PB501331
NSYPFPLM32


PB500155
NSYPFPLM


PB501332
NSYPFXPLM

### Wall-fixing lugs

- Set of 4 wall-fixing lugs.
- Mounted directly on the enclosure, either in horizontal position or in vertical position.
- Available in 2 versions, polyamide loaded with fibreglass or stainless steel.
- Delivered with fixings.
- Acceptable load of 300 kg in vertical position and 100 kg in horizontal position.

| Material | References |
|---|---|
| Polyamide | **NSYPFPLM** (1) |
| Stainless steel | **NSYPFXPLM** (1) |

(1) Single reference in polyamide, ref. **NSYPFPLM32**, for enclosure ref. **NSYPLM32** and **NSYPLM32T**.


PB500156

### Post-fixing device

- For outdoor installations on a post with a maximum circumference of 675 mm, Ø 215 mm.
- Material: galvanised steel.
- Supply of the rail, the strips and the fixings. Maximum load: 100 kg.

| For wall-mounting enclosure | References |
|---|---|
| NSYPLM43 | **NSYSFP300** (1) |
| NSYPLM54 and NSYPLM64 | **NSYSFP400** |
| NSYPLM75 | **NSYSFP500** |
| NSYPLM86 | **NSYSFP600** |

(1) **NSYSFP300** can be used for fixation of **NSYPLM32**; the length of the cross rail is slightly larger than enclosure.

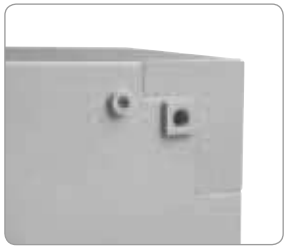
PB501334

### Blanking plates

- Made from thermoplastic material, they are positioned on the rear surface of the enclosures to block the openings in the corners in order to improve their appearance or prevent the entry of unwanted elements in the ventilation shaft.
- Supplied as standard for enclosure, ref. **NSYPLM108**.

| For wall-mounting enclosure | References |
|---|---|
| NSYPLM32 | **NSYCEPLMA** |
| NSYPLM43 and NSYPLM54 | **NSYCEPLMB** |
| NSYPLM64, 75 and 86 | **NSYCEPLMC** |

# Composition accessories
## Door and door accessories


PB501335

### Internal door

- Reversible door made from polyester reinforced with fibreglass, self-extinguishing, RAL 7032 grey.
- Grid pattern with a pitch of 25 mm for easier marking out before drilling.
- Closes with 2 double-bar locks.
- Door handle.
- Delivered with fixings and brass inserts.
- Steel internal door, without grid pattern and locking by a screw, for enclosures ref. **NSYPLM3025**.
- Incompatible with the modular distribution chassis.

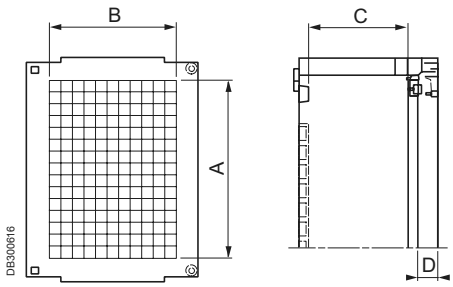


| For wall-mounting enclosure (mm) | | Dimensions (mm) | | | | References |
|---|---|---|---|---|---|---|
| Height | Width | A | B | C | D | |
| 308 | 255 | 248 | 165 | 62 | 76 | **NSYPA3025PLM** |
| 430 | 330 | 315 | 205 | 152 | 26 | **NSYPAP43** |
| 530 | 430 | 415 | 305 | 152 | 26 | **NSYPAP54** |
| 645 | 435 | 515 | 305 | 194 | 32 | **NSYPAP64** |
| 745 | 535 | 615 | 405 | 244 | 32 | **NSYPAP75** |
| 845 | 635 | 715 | 505 | 244 | 32 | **NSYPAP86** |
| 1055 | 850 | 850 | 650 | 269 | 37 | **NSYPAP108** |

# Composition accessories
## Locking system


PB501336

### Locks and inserts for enclosures with H ≤ 847 mm

- The ABS/PC 310 × 215 mm enclosure is supplied with a lock with a double-bar insert as standard.
- The 308 × 255 mm enclosure is supplied with two locks with a double-bar insert as standard.
- The polyester enclosures from 430 to 847 mm high are delivered as standard with:

– 2 locks with double-bar insert, ref. **NSYCDBPLM**.
– Or a 3-point closure with handle and lock with key 1242 E (enclosures **NSYPLM••V**).

- Double-bar insert ref. **NSYTDBCRN**, is placed in a rectangular escutcheon.
- A plastic key, ref. **NSYDBP**, enabling the opening of the double-bar insert, is included in the standard supply. This key can be fixed to the double-bar system to remain on the enclosure and be used as a handle.

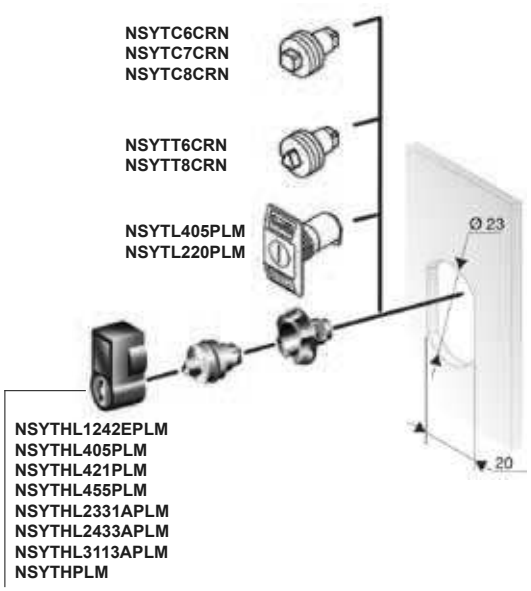

PB501337

### Options to transform the locks with double-bar inserts

- Changing the shape inserts for locks with keys according to the following table:

| Name | References |
|---|---|
| 6 mm male square | **NSYTC6CRN** |
| 7 mm male square | **NSYTC7CRN** |
| 8 mm male square | **NSYTC8CRN** |
| 6.5 mm male triangle | **NSYTT6CRN** |
| 8 mm male triangle | **NSYTT8CRN** |
| Lock and key 405 | **NSYTL405PLM** |
| Lock and key 220 | **NSYTL220PLM** |

- Replacement for locking handle with cylindrical barrel, delivered with all the parts required to change the lock.

| Type of barrel | References |
|---|---|
| Key 1242 E | **NSYTHL1242EPLM** |
| Key 405 | **NSYTHL405PLM** |
| Key 421 | **NSYTHL421PLM** |
| Key 455 | **NSYTHL455PLM** |
| Key 2331 A | **NSYTHL2331APLM** |
| Key 2433 A | **NSYTHL2433APLM** |
| Key 3113 A | **NSYTHL3113APLM** |
| Manual | **NSYTHPLM** |

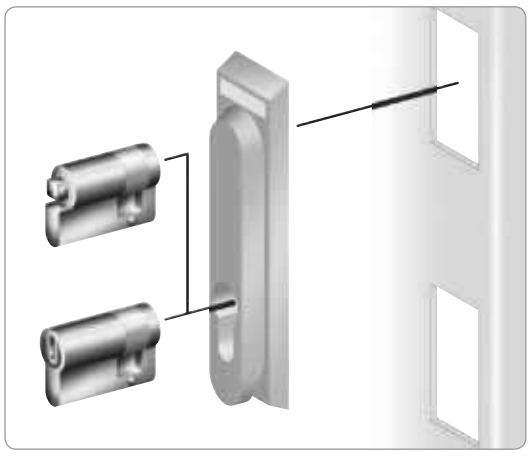
PB501338

### Options to transform versions NSYPLM••V, with retractable handle and 3-point closure

- Transformation of the standard insert (barrel for key 1242E, ref. **NSYTL1242EME**) for other shape inserts or barrels according to the following table:

| Name | References |
|---|---|
| 5 mm double bar | **NSYTDB5ME** |
| 6 mm male square | **NSYTC6ME** |
| 7 mm male square | **NSYTC7ME** |
| 8 mm male square | **NSYTC8ME** |
| 6.5 mm male triangle | **NSYTT6ME** |
| 8 mm male triangle | **NSYTT8ME** |
| Barrel and key 405 | **NSYTCL405ME** |
| Reinforced key and barrel | **NSYTLRME** |
| JIS key and barrel | **NSYTLJISME** |
| Manual | **NSYTMME** |

# Composition accessories
## Locking system

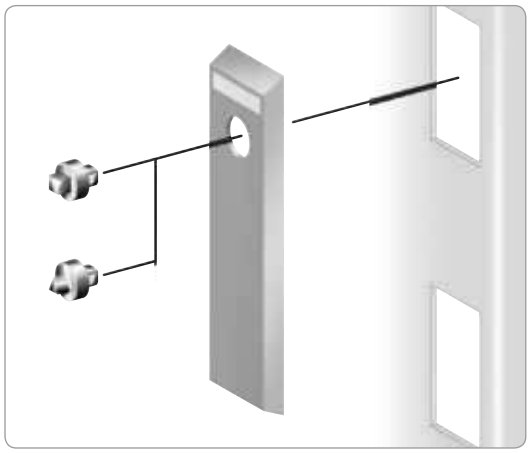
PB501339

## Locks and inserts for enclosures NSYPLM108/T

- Enclosures delivered as standard with 5 mm double-bar insert.
- Insert ref. **NSYTDB5PL**, placed in a long rectangular escutcheon, activates a 4-point closure system.

### Options to transform the insert

- The standard insert can be replaced with other shape inserts, according to the following table:

| Name | References |
|---|---|
| 6 mm male square | **NSYTC6PL** |
| 7 mm male square | **NSYTC7PL** |
| 8 mm male square | **NSYTC8PL** |
| 6.5 mm male triangle | **NSYTT6PL** |
| 7 mm male triangle | **NSYTT7PL** |
| 8 mm male triangle | **NSYTT8PL** |

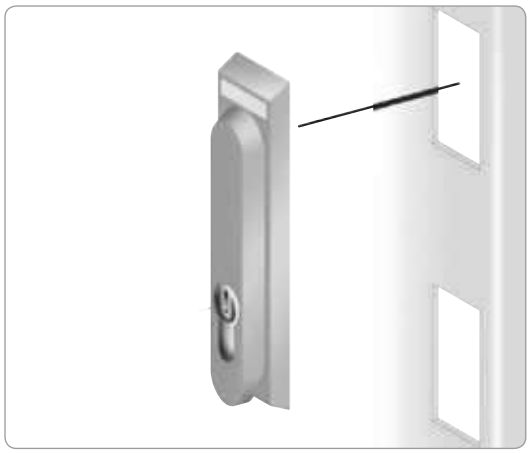
PB501340

### Options to transform for a retractable handle

- The escutcheon and rosette assembly can be replaced with a lock with retractable handle equipped with inserts or barrels, according to the following table:

| Name | References |
|---|---|
| 5 mm double bar | **NSYTEDB5PL** |
| 6 mm male square | **NSYTEC6PL** |
| 7 mm male square | **NSYTEC7PL** |
| 8 mm male square | **NSYTEC8PL** |
| 6.5 mm male triangle | **NSYTET6PL** |
| 7 mm male triangle | **NSYTET7PL** |
| 8 mm male triangle | **NSYTET8PL** |
| Lock key 1242 E | **NSYTEL1242EPL** |
| Barrel and key 405 | **NSYTEL405PL** |
| Reinforced key and barrel | **NSYTERPL** |
| JIS key and barrel | **NSYTELJISPL** |
| FAC key and barrel | **NSYTELFACPL** |
| Manual | **NSYTEMPL** |

## Padlocking accessories


PB501341

- Padlocking system, ref. **NSYKPLM**, positioned around the rectangular escutcheon of the enclosures with a height of ≤ 847 mm to block access to the lock; for a ∅ 9 mm padlock.

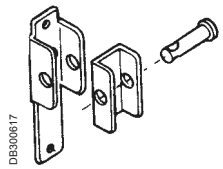
DB300617

- Padlocking system, ref. **NSYBCPL**, positioned around the long rectangular escutcheon of the enclosures ref. **NSYPLM108/T**, to block access to the lock; for a ∅ 9 mm padlock.

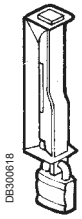
DB300618

- Padlocking system, ref. **NSYBCME**, to block access to the retractable handle, for the versions **NSYPLM●●V** or optionally for enclosures ref. **NSYPLM108/T**, for a ∅ 9 mm padlock.

# Mounting accessories


PB500149

## Step slides

**For depth adjustment of the mounting plate**

- Kit including 4 step slides with brackets, allowing depth adjustment with a pitch of 12.5 mm, and the fixings required for the installation.
- Material: galvanised steel.
- Incompatible with the modular distribution chassis.

| For wall mounting enclosure | Depth adjustment | | References |
|---|---|---|---|
| Depth (mm) | Dimension A (mm) | Dimension B (mm) | |
| 200 | 156 | 94 | **NSYDPLM200** |
| 250 | 200 | 100 | **NSYDPLM250** |
| 300 | 250 | 100 | **NSYDPLM300** |
| 350 | 306 | 106 | **NSYDPLM350** |

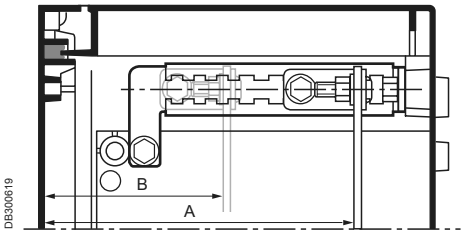

DB300619

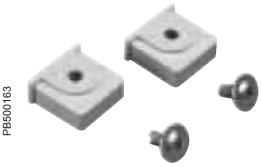
PB500163

## Plastic nuts for rail fixing

- They slide directly into the notches, with a pitch of 25 mm, which are located on the rear of the enclosures, except enclosure ref. **NSYPLM3025/T**. They allow direct fixing of symmetrical DIN rails by self-tapping screws. Option of raising the rails with an M6 spacer using a plastic nut containing an M6 nut.

References by unit. Order by multiples of 20 units (20, 40, 60, etc.).

| Name | References |
|---|---|
| Plastic nut with self- tapping screw | **NSYTCSPLM** |
| Plastic nut containing an M6 metal nut | **NSYTCSM6PLM** |


PB501342

## 35 mm symmetrical DIN rails

- They are fixed to the rear of the enclosure without uprights, with a pitch of 25 mm for the notches on the rear of the enclosure, with the help of direct-fixing nuts ref. **NSYTCSPLM** or **NSYTCSM6PLM**.
- Treated steel.

References by unit. Order by multiples of 2 units (2, 4, 6, etc.).

| Rail length (mm) | For wall mounting enclosure | References |
|---|---|---|
| | Width (mm) | |
| 180 | 215 | **NSYCS200PLM** |
| 280 | 330 | **NSYCS300PLM** |
| 380 | 430 / 436 | **NSYCS400PLM** |
| 480 | 536 | **NSYCS500PLM** |
| 580 | 636 | **NSYCS600PLM** |
| 795 | 852 | **NSYCS800PLM** |

# Accessories
## Diverse


PB501343

NSYTEX8 NSYTEX6 NSYTEX5

### Fixing inserts

- Expanding inserts for addition to the M6 bosses of the enclosure, the M5 or M6 bosses of the door and the M8 bosses of the external rear part of the enclosure.
- M5 and M6 inserts to be ordered in multiples of 20.

References by unit. Order by multiples of 8 units (8, 16, 24, etc.).

| Insert size | For wall-mounting enclosure | References |
|---|---|---|
| M5 | **NSYPLM43** and **NSYPLM54** | **NSYTEX5** |
| M6 | **NSYPLM64** and **NSYPLM108** | **NSYTEX6** |
| M8 | For the rear of the enclosure | **NSYTEX8** |


PB500164

NSYCAG35LP

### Ventilation louvres

- They can be positioned inside the wall-mounting enclosures with heights of 430 to 846 mm, allowing ventilation through the channels of the enclosure.
- The IP on the rear of the enclosures is IP 44.

References by unit. Order by multiples of 2 units (2, 4, 6, etc.).

| Name | Reference |
|---|---|
| Ventilation louvres | **NSYCAG35LP** |

Ventilation louvres, airing devices with filters, fans and thermal adjustment accessories, see ClimaSys section.


PB500162

NSYVEA9

### Water drain plug

- For drainage of condensation water.
- It is placed in the ∅ 9 mm housing at the bottom of the enclosure.
- IP 55.

References by unit. Order by multiples of 10 units (10, 20, 30, etc.).

| Name | Reference |
|---|---|
| Water drain plug | **NSYVEA9** |



PB500191

## Renovation and anti-graffiti paint

- Paint system with 2 components (base 80% + hardener 20%), specially designed for polyester enclosures, for their renovation and/or as prevention to allow easy removal of graffiti.
- The 1 kg reference includes 1 pot with 800 g of base paint and 200 g of hardener. It is enough to paint a surface of around 5 $m^2$.
- The 5 kg reference includes 1 pot with 4 kg of base paint and 1 kg of hardener. It is enough to paint a surface of around 25 $m^2$.
- RAL 7032 colour.
- Solvent for diluting the paint and cleaning the utensils.

| Name | References |
|---|---|
| Anti-graffiti paint 1 kg | **NSYAUPG1** |
| Anti-graffiti paint 5 kg | **NSYAUPG5** |
| Anti-graffiti paint solvent 500 g | **NSYAUPGS** |

# Power distribution accessories
## Modular distribution accessories




For ranges S3D*, CRN, S3X, PLM

* Minimum depth 200 mm.

## Technical characteristics

### Dinimel DLA modular chassis

- Front panels and finish covers, made from self-extinguishing insulating material RAL 7032 colour. Rigid galvanised-steel structure, for the installation of modular devices.
- Front panels and covers installed in the front part, are not depth adjustable.
- Open front panels with 35 mm DIN rail and plain front panels with mounting plate, according to the model.
- Quick installation with no fixings.
- Shoulder height adjustable from 40 to 85 mm.
- System for standard circuit marking.
- Incompatible with the internal doors and the step slides.
- Neutral / earth strip: 2 × 16 mm² + 5 × 6 mm².

| Dimensions (mm) | | | | | Distribution rows | | | | For installation in the enclosures | | | | References |
|---|---|---|---|---|---|---|---|---|---|---|---|---|---|
| A | B | C | D min. | E min. | Nº of useful rows | No. of 18 mm modules per row | No. of 18 mm modules | No. of plates | PLM enclosure References | | S3D (depth ⩾ 200 mm) or CRN enclosure Height | S3D (depth ⩾ 200 mm) or CRN enclosure Width | |
| 216 | 115 | 137 | 38 | 88 | 2 | 12 | 24 | – | **NSYPLM43** | **NSYPLM43T** | 400 | 300 | **NSYDLA24** |
| 286 | 90 | 112 | 38 | 88 | 3 | 16 | 48 | – | **NSYPLM54** | **NSYPLM54T** | 500 | 400 | **NSYDLA48** |
| 286 | 140 | 170 | 80 | 130 | 3 | 16 | 48 | – | **NSYPLM64** | **NSYPLM64T** | 600 | 400 | **NSYDLA48P** |
| 395 | 115 | 145 | 129 | 179 | 3 | 22 | 66 | 1 | **NSYPLM75** | **NSYPLM75T** | 700 | 500 | **NSYDLA66** |
| 395 | 115 | 145 | 129 | 179 | 4 | 22 | 88 | – | **NSYPLM75** | **NSYPLM75T** | 700 | 500 | **NSYDLA88** |
| 504 | 165 | 195 | 129 | 179 | 3 | 28 | 84 | 1 | **NSYPLM86** | **NSYPLM86T** | 800 | 600 | **NSYDLA84** |
| 504 | 165 | 195 | 129 | 179 | 4 | 28 | 112 | – | **NSYPLM86** | **NSYPLM86T** | 800 | 600 | **NSYDLA112** |
| 704 | 115 | 146 | 170 | 220 | 6 | 39 | 234 | – | **NSYPLM108** | **NSYPLM108T** | 1000 | 800 | **NSYDLA234** |

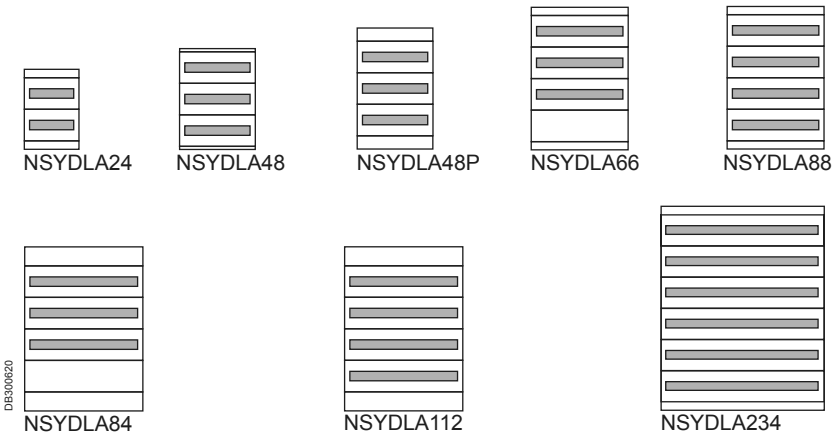

# Power distribution accessories
## Modular distribution accessories

### Dimensions (mm)

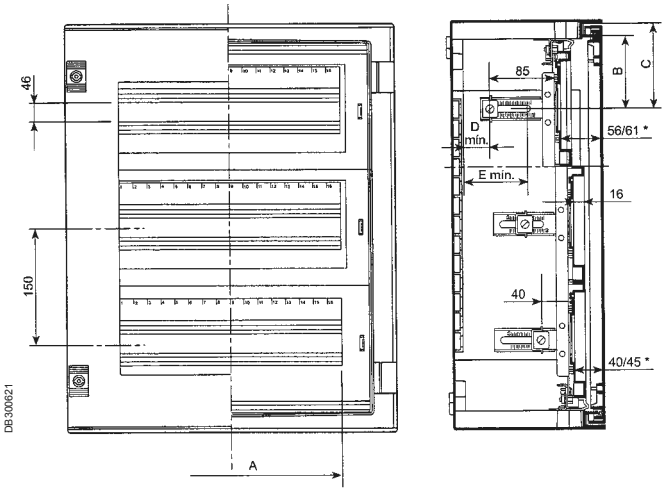


* Models NSYDLA48P, 66, 88, 84 and 112.


PB501345

### Plain front panels for Dinimel DLA chassis

- Front panel made from RAL 7032 self-extinguishing insulating material for non-modular device protection, on one row.
- To be ordered in multiples of 2.

| For installing on the chassis | Width (mm) | References |
|---|---|---|
| NSYDLA24 | 256 | **NSYCTL300DLA** |
| NSYDLA48 and NSYDLA48P | 356 | **NSYCTL400DLA** |
| NSYDLA66 and NSYDLA88 | 456 | **NSYCTL500DLA** |
| NSYDLA84 and NSYDLA112 | 555 | **NSYCTL600DLA** |
| NSYDLA234 | 755 | **NSYCTL800DLA** |


PB501346

### Mounting plate for Dinimel DLA chassis

- Galvanised-steel mounting plate for mounting non-modular devices, on one row.
- To be ordered in multiples of 2.

| For installing on the chassis | Width (mm) | References |
|---|---|---|
| NSYDLA48 and NSYDLA48P | 315 | **NSYPMP400DLA** |
| NSYDLA66 and NSYDLA88 | 415 | **NSYPMP500DLA** |
| NSYDLA84 and NSYDLA112 | 514 | **NSYPMP600DLA** |
| NSYDLA234 | 714 | **NSYPMP800DLA** |

### Modular distribution chassis for enclosure ref. PLM3025/T

- Metal chassis and protective plate in insulating material.
- For mounting modular devices on two rows of nine 18-mm modules.

| Name | Reference |
|---|---|
| Modular distribution chassis | **NSYDLPLM18** |

# PLM customised solution
## Configured and specific
## Solution guide




### Thalassa PLM configured or specific polyester wall-mounting enclosures

- The configured offer anticipates the most common needs and can optimise delivery times. It only includes polyester enclosures. The configurator on the next page defines the limits of this offer and helps you cost this solution.
- The specific offer allows the greatest variety of customisations. Help to define a specific need is presented on page **7**.
- The advantages and examples of customised solutions are presented on pages **5** and **6**.

| Part | Service | Configured | Specific |
|---|---|---|---|
| | Minimum amount | | ☑ |
| | Maximum amount | ☑ | |
| **Body and door** | Special colour of the material | | ☑ |
| | Paint colour | | ☑ |
| | Anti-graffiti paint | | ☑ |
| **Body** | Horizontal coupling | | ☑ |
| | Mounting back-to-back | | ☑ |
| | Body machining on all surfaces (1) | ☑ | ☑ |
| | Lugs at a given location | | ☑ |
| | Mounting (or supply) of standard accessories of the configured offer (2) | ☑ | ☑ |
| | Mounting (or supply) of other standard accessories of Thalassa PLM | | ☑ |
| | Mounting (or supply) of other standard common accessories | | ☑ |
| **Door** | Machining in the door (1) | ☑ | |
| | Special glass (dimensions) or window | | ☑ |
| | Standard catalogue locks (2) | ☑ | ☑ |
| | Special locks not included in the catalogue | | To be studied |
| | Mounting (or supply) of standard accessories of the configured offer (2) | ☑ | ☑ |
| | Mounting (or supply) of other standard accessories of Thalassa PLM | | ☑ |
| | Mounting (or supply) of other standard common accessories | | ☑ |
| **Mounting plates and rails** | Standard mounting plate | ☑ | ☑ |
| | Special mounting plate | | To be studied |
| | Special machining of mounting plate | | ☑ |
| **Cable-gland plates and accessories** | Installation of common cable-gland plates and/or cable entries | | ☑ |
| | Installation of common cable-management accessories | | ☑ |
| **Thermal** | Installation of airing devices, fans (2) | ☑ | ☑ |
| **Diverse** | Machining of the internal door or the cable-gland plates | | ☑ |
| | Special installation accessories: plinths, external mounting plates, supports, etc. | | To be studied |
| | Other accessories | | To be studied |
| | Special marking | | ☑ |
| | Special packaging | | ☑ |

(1) See areas in DXF diagram.
(2) The accessories included or installed in the configured offer are shown in the configuration sheet on the next page.

# PLM configured solution
## Configuration sheet

Configured


PB501281

Document to be sent to your sales office by e-mail or fax

YOUR CONTACT DETAILS

Full name: _____

Company: _____

Address: _____

Tel.: _____ Fax: _____

E-mail: _____

NUMBER OF ENCLOSURES .....

GLAZED DOOR ☐ PLAIN DOOR ☐

HINGES ON THE LEFT ☐

REFERENCE

OR CATALOGUE DIMENSIONS (mm)

| HEIGHT | WIDTH | DEPTH | |
|---|---|---|---|
| 307 | / 255 | / 164 | ☐ |
| 430 | / 330 | / 200 | ☐ |
| 530 | / 430 | / 200 | ☐ |
| 647 | / 436 | / 250 | ☐ |
| 747 | / 536 | / 300 | ☐ |
| 847 | / 636 | / 300 | ☐ |
| 1056 | / 852 | / 350 | ☐ |

## Choice of standard configured accessories

*Also tick the red box* m *for accessories installed at the plant.*

LUGS
- POLYESTER ☐
- STAINLESS STEEL ☐

OUTLET GRILLE ☐ m ☐
REF. NSYCAG125LPF
(RAL 7035)

FAN ☐ m ☐
REF. NSYCVF85M230PF
(RAL 7035)

THERMOSTAT ☐
REF. NSYCCOTHO

PURGE ☐ m ☐

STEP SLIDES ☐ m ☐

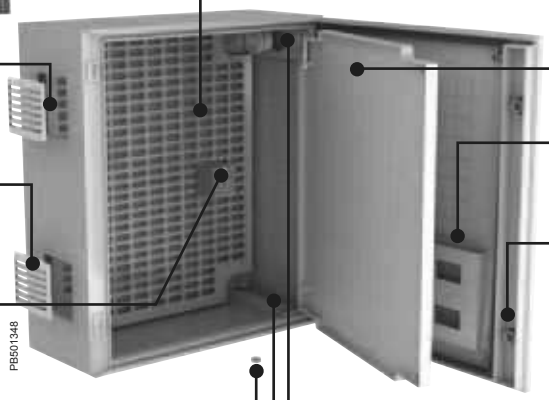
PB501348

REAR MOUNTING PLATE
- PLAIN ☐ m ☐
- TELEQUICK ☐ m ☐
- MODULAR CHASSIS ☐ m ☐

☐ INTERNAL DOOR (installed)

☐ DOCUMENT LIP

LOCK MODIFICATION
- SQUARE 7 mm ☐
- SQUARE 8 mm ☐
- TRIANGLE 8 mm ☐
- PADLOCKING ☐

INTERNAL VENTILATION LOUVRES (SET OF 2) ☐ m ☐

Eventual incompatibilities between accessories can't be considered in configurator sheet.

# PLM configured solution
## Configuration sheet

Configured




## Machining

For a quick calculation, please indicate the total number of machining operations required:

| | |
|---|---|
| ON THE BODY (REAR AND SURFACES) | |
| FOR GRILLES, FANS, PURGES AND AIRING DEVICES | |
| OTHER MACHINING OPERATIONS | |
| ON THE DOOR | |

NOTE: Every drill-hole or cut-out counts as a machining operation. The machining areas are indicated on the DXF diagrams.

Download the configuration sheets and the DXF diagrams from our websites.
Send them back to your sales office with your modifications.
Mandatory when ordering to guarantee configured offer delivery times.

Specific

Other needs, other constraints? contact us.
A specific offer will meet all your requirements. Help to define a specific need is presented on page **7**.

Advantages of our customised offer and implementation examples. See pages **5** and **6**.

# Polyester floor-standing enclosures

## Service life

High resistance to corrosion in harsh environments, maintaining its mechanical and insulation properties.

## Safety

- Full insulation (to create class II units).
- No risk to the public.
- Lock with 2 or 4-point closure.

## Protection

- IP 44 or 54 and IP 65 in the industrial version.
- Polyurethane gasket.
- Lock outside sealed area.

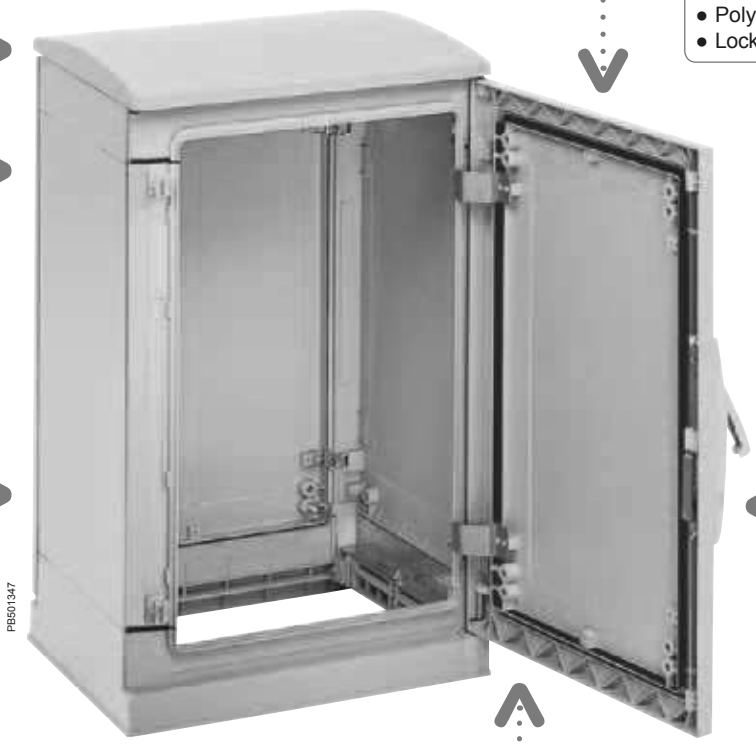


## Choice

4 enclosure versions, available in 40 dimensions with 3-door versions.

## Smart

- Door with ripped surface to avoid posting.
- Reversible door (1-door enclosure).
- Numerous fixing bosses on the doors and panels.

## Easy

- Opening to 120° or 180°.
- The central upright can be removed.
- Numerous fixing points.

## Applications

- Industry or infrastructures in harsh environments.
- Accessories for modular distribution and 19".

## Customisation

- Configured: machining and accessories.
- Specific: non-standard colours and accessories.
- Every possible combination of versions and doors, front and rear, not included in the standard offer.

## General characteristics of the floor-standing enclosure

- Indoor or outdoor use.
- 4 versions:
  – Completely sealed enclosure (PLA version).
  – Enclosure with ventilated canopy (PLAT version).
  – Enclosure with plinth-type open bottom (PLAZ version).
  – Enclosure with plinth-type open bottom and ventilated canopy (PLAZT version).
  – Note: The first letters of the references relate to the version.
- 40 dimensions:
  – 5 heights: 500, 750, 1000, 1250, 1500 mm.
  – 4 widths: 500 and 750 (1 door), 1000 and 1250 mm (2 doors).
  – 2 depths: 320 and 420 mm.
  – Note: The figures included in the references of the enclosures and products of the range represent the dimension in dm of the product in question.
  – The 2-door enclosures comprise a central upright, which can be removed in certain conditions. Please contact us.
- 3 types of door:
  – Plain door.
  – Door with transparent window (index T at the end of the reference).
  – Door with anti-posting surface (index R at the end of the reference).
- Protection degree IP 65 or IP 54 according to standard IEC 60529.
- Impact resistance IK 10 for the plain doors and all sides and IK 08 for the glazed door.
- 2-point closure for heights of 500 and 750 mm and 4-point closure points for heights ≥ 1000 mm.

## Characteristics of the material

The floor-standing enclosures are made from polyester reinforced with fibreglass, moulded by hot compression, RAL 7032 grey. This material:

- Is insulating: > 15 kV per mm.
- Can be machined easily.
- Is resistant to corrosion: does not rust and can withstand many chemical substances.
- Resists bad weather (rain, UV).
- Withstands cold and heat in the range of –50 °C…+150 °C.
- Does not soften under heat (ball resistance at +150 °C).
- Is self-extinguishing (does not propagate fire: HB40 classification and self-extinguishing in several seconds during the glow-wire test at 960 °C during 30 s.).
- Does not contain halogens.
- Releases little smoke and nontoxic smoke in the case of combustion.
- Is light.

## Characteristics of the production process

The components of the enclosures (the various sides and doors) are moulded by hot compression: the pieces have an excellent finish on both sides and can include numerous bosses for accommodating inserts and mounting or cable management accessories.

## Complies with enclosure standard IEC 62208 for:

IP, IK, resistance to heat and fire, insulation 5000 V, resistance to bad weather and corrosion and resistance to internal loads (150 kg/m$^2$) and loads on the door (30 kg/m$^2$).

## Full insulation to create class II units according to IEC 64139-1

## UL certification and NEMA classification 4X, 5, 12 and 13, depending on the version

## Complies with RoHS and REACH Directives

# Completely sealed enclosures, IP 65

## Introduction


PB501353

Completely sealed enclosure with plain door.


PB501354

Transparent door made from polyester and tempered glass.


PB500192

Escutcheon with double-bar insert.


PB501355

Detail from the internal locking system.

### Characteristics of the PLA version

- Enclosure obtained by assembling:
  – 1 sealed top part.
  – 1 sealed bottom part.
  – 2 side parts.
  – 1 or 2 rear panels (according to width).
  – 1 or 2 doors (according to width).
- Indoor use.
- Outdoor use possible with a canopy (to be ordered separately).
- Protection degree IP 65 according to IEC 60529.
- Locking system with escutcheon and 5-mm double-bar insert, included in the standard supply. Other inserts or locks with handles optionally available.
- Door opening to 120°.
- Direct fixing to the floor or by means of a plinth with a height of 60 mm, as an option, see page **54**.
- Possibility of fixing on a semi-embedded plinth, see page **55**.
- Optional wall-fixing lugs.


PB500165


PB500166


PB500167

| External dimensions (mm) | | | | References of enclosures with door | | |
|---|---|---|---|---|---|---|
| Height | Width | Depth | N° of doors | Plain | Glazed | Anti-posting |
| 500 | 500 | 320 | 1 | **NSYPLA553** | **NSYPLA553T** | **NSYPLA553R** |
| 500 | 500 | 420 | 1 | **NSYPLA554** | **NSYPLA554T** | **NSYPLA554R** |
| 500 | 750 | 320 | 1 | **NSYPLA573** | **NSYPLA573T** | **NSYPLA573R** |
| 500 | 750 | 420 | 1 | **NSYPLA574** | **NSYPLA574T** | **NSYPLA574R** |
| 500 | 1000 | 320 | 2 | **NSYPLA5103** | **NSYPLA5103T** | **NSYPLA5103R** |
| 500 | 1000 | 420 | 2 | **NSYPLA5104** | **NSYPLA5104T** | **NSYPLA5104R** |
| 500 | 1250 | 320 | 2 | **NSYPLA5123** | **NSYPLA5123T** | **NSYPLA5123R** |
| 500 | 1250 | 420 | 2 | **NSYPLA5124** | **NSYPLA5124T** | **NSYPLA5124R** |
| 750 | 500 | 320 | 1 | **NSYPLA753** | **NSYPLA753T** | **NSYPLA753R** |
| 750 | 500 | 420 | 1 | **NSYPLA754** | **NSYPLA754T** | **NSYPLA754R** |
| 750 | 750 | 320 | 1 | **NSYPLA773** | **NSYPLA773T** | **NSYPLA773R** |
| 750 | 750 | 420 | 1 | **NSYPLA774** | **NSYPLA774T** | **NSYPLA774R** |
| 750 | 1000 | 320 | 2 | **NSYPLA7103** | **NSYPLA7103T** | **NSYPLA7103R** |
| 750 | 1000 | 420 | 2 | **NSYPLA7104** | **NSYPLA7104T** | **NSYPLA7104R** |
| 750 | 1250 | 320 | 2 | **NSYPLA7123** | **NSYPLA7123T** | **NSYPLA7123R** |
| 750 | 1250 | 420 | 2 | **NSYPLA7124** | **NSYPLA7124T** | **NSYPLA7124R** |
| 1000 | 500 | 320 | 1 | **NSYPLA1053** | **NSYPLA1053T** | **NSYPLA1053R** |
| 1000 | 500 | 420 | 1 | **NSYPLA1054** | **NSYPLA1054T** | **NSYPLA1054R** |
| 1000 | 750 | 320 | 1 | **NSYPLA1073** | **NSYPLA1073T** | **NSYPLA1073R** |
| 1000 | 750 | 420 | 1 | **NSYPLA1074** | **NSYPLA1074T** | **NSYPLA1074R** |
| 1000 | 1000 | 320 | 2 | **NSYPLA10103** | **NSYPLA10103T** | **NSYPLA10103R** |
| 1000 | 1000 | 420 | 2 | **NSYPLA10104** | **NSYPLA10104T** | **NSYPLA10104R** |
| 1000 | 1250 | 320 | 2 | **NSYPLA10123** | **NSYPLA10123T** | **NSYPLA10123R** |
| 1000 | 1250 | 420 | 2 | **NSYPLA10124** | **NSYPLA10124T** | **NSYPLA10124R** |
| 1250 | 500 | 320 | 1 | **NSYPLA1253** | **NSYPLA1253T** | **NSYPLA1253R** |
| 1250 | 500 | 420 | 1 | **NSYPLA1254** | **NSYPLA1254T** | **NSYPLA1254R** |
| 1250 | 750 | 320 | 1 | **NSYPLA1273** | **NSYPLA1273T** | **NSYPLA1273R** |
| 1250 | 750 | 420 | 1 | **NSYPLA1274** | **NSYPLA1274T** | **NSYPLA1274R** |
| 1250 | 1000 | 320 | 2 | **NSYPLA12103** | **NSYPLA12103T** | **NSYPLA12103R** |
| 1250 | 1000 | 420 | 2 | **NSYPLA12104** | **NSYPLA12104T** | **NSYPLA12104R** |
| 1250 | 1250 | 320 | 2 | **NSYPLA12123** | **NSYPLA12123T** | **NSYPLA12123R** |
| 1250 | 1250 | 420 | 2 | **NSYPLA12124** | **NSYPLA12124T** | **NSYPLA12124R** |
| 1500 | 500 | 320 | 1 | **NSYPLA1553** | **NSYPLA1553T** | **NSYPLA1553R** |
| 1500 | 500 | 420 | 1 | **NSYPLA1554** | **NSYPLA1554T** | **NSYPLA1554R** |
| 1500 | 750 | 320 | 1 | **NSYPLA1573** | **NSYPLA1573T** | **NSYPLA1573R** |
| 1500 | 750 | 420 | 1 | **NSYPLA1574** | **NSYPLA1574T** | **NSYPLA1574R** |
| 1500 | 1000 | 320 | 2 | **NSYPLA15103** | **NSYPLA15103T** | **NSYPLA15103R** |
| 1500 | 1000 | 420 | 2 | **NSYPLA15104** | **NSYPLA15104T** | **NSYPLA15104R** |
| 1500 | 1250 | 320 | 2 | **NSYPLA15123** | **NSYPLA15123T** | **NSYPLA15123R** |
| 1500 | 1250 | 420 | 2 | **NSYPLA15124** | **NSYPLA15124T** | **NSYPLA15124R** |

# Enclosures with ventilated canopy IP 44
## Introduction


PB500215

Enclosure with ventilated canopy and plain door.


PB501356

Open top part with canopy allowing for ventilation.


PB500193

External handle.


PB501357

Door with anti-posting surface and additional reinforcement.


PB501358

Various bosses for M8 inserts.

### Characteristics of the PLAT version

- Enclosure obtained by assembling:
  – 1 open top part with canopy.
  – 1 sealed bottom part.
  – 2 side parts.
  – 1 or 2 rear panels (according to width).
  – 1 or 2 doors (according to width).
- Outdoor use.
- Protection degree IP 44 according to IEC 60529.
- Protection degree IP 54 with 1 or 2 internal grilles, ref. **NSYCAG125LPF**, to be ordered separately.
- Locking system with handle with a 5-mm double-bar insert block, included in the standard supply. Other blocks with inserts or barrels and keys optionally available.
- Door opening to 120°.
- Direct fixing to the floor or by means of a plinth with a height of 60 mm, as an option, see page **54**.
- Possibility of fixing on a semi-embedded plinth, see page **55**.
- Optional wall-fixing lugs.


PB500170


PB500171

| External dimensions (mm) | | | | References of enclosures with door | |
|---|---|---|---|---|---|
| Height | Width | Depth | N° of doors | Plain | Anti-posting |
| 500 | 500 | 320 | 1 | **NSYPLAT553** | **NSYPLAT553R** |
| 500 | 500 | 420 | 1 | **NSYPLAT554** | **NSYPLAT554R** |
| 500 | 750 | 320 | 1 | **NSYPLAT573** | **NSYPLAT573R** |
| 500 | 750 | 420 | 1 | **NSYPLAT574** | **NSYPLAT574R** |
| 500 | 1000 | 320 | 2 | **NSYPLAT5103** | **NSYPLAT5103R** |
| 500 | 1000 | 420 | 2 | **NSYPLAT5104** | **NSYPLAT5104R** |
| 500 | 1250 | 320 | 2 | **NSYPLAT5123** | **NSYPLAT5123R** |
| 500 | 1250 | 420 | 2 | **NSYPLAT5124** | **NSYPLAT5124R** |
| 750 | 500 | 320 | 1 | **NSYPLAT753** | **NSYPLAT753R** |
| 750 | 500 | 420 | 1 | **NSYPLAT754** | **NSYPLAT754R** |
| 750 | 750 | 320 | 1 | **NSYPLAT773** | **NSYPLAT773R** |
| 750 | 750 | 420 | 1 | **NSYPLAT774** | **NSYPLAT774R** |
| 750 | 1000 | 320 | 2 | **NSYPLAT7103** | **NSYPLAT7103R** |
| 750 | 1000 | 420 | 2 | **NSYPLAT7104** | **NSYPLAT7104R** |
| 750 | 1250 | 320 | 2 | **NSYPLAT7123** | **NSYPLAT7123R** |
| 750 | 1250 | 420 | 2 | **NSYPLAT7124** | **NSYPLAT7124R** |
| 1000 | 500 | 320 | 1 | **NSYPLAT1053** | **NSYPLAT1053R** |
| 1000 | 500 | 420 | 1 | **NSYPLAT1054** | **NSYPLAT1054R** |
| 1000 | 750 | 320 | 1 | **NSYPLAT1073** | **NSYPLAT1073R** |
| 1000 | 750 | 420 | 1 | **NSYPLAT1074** | **NSYPLAT1074R** |
| 1000 | 1000 | 320 | 2 | **NSYPLAT10103** | **NSYPLAT10103R** |
| 1000 | 1000 | 420 | 2 | **NSYPLAT10104** | **NSYPLAT10104R** |
| 1000 | 1250 | 320 | 2 | **NSYPLAT10123** | **NSYPLAT10123R** |
| 1000 | 1250 | 420 | 2 | **NSYPLAT10124** | **NSYPLAT10124R** |
| 1250 | 500 | 320 | 1 | **NSYPLAT1253** | **NSYPLAT1253R** |
| 1250 | 500 | 420 | 1 | **NSYPLAT1254** | **NSYPLAT1254R** |
| 1250 | 750 | 320 | 1 | **NSYPLAT1273** | **NSYPLAT1273R** |
| 1250 | 750 | 420 | 1 | **NSYPLAT1274** | **NSYPLAT1274R** |
| 1250 | 1000 | 320 | 2 | **NSYPLAT12103** | **NSYPLAT12103R** |
| 1250 | 1000 | 420 | 2 | **NSYPLAT12104** | **NSYPLAT12104R** |
| 1250 | 1250 | 320 | 2 | **NSYPLAT12123** | **NSYPLAT12123R** |
| 1250 | 1250 | 420 | 2 | **NSYPLAT12124** | **NSYPLAT12124R** |
| 1500 | 500 | 320 | 1 | **NSYPLAT1553** | **NSYPLAT1553R** |
| 1500 | 500 | 420 | 1 | **NSYPLAT1554** | **NSYPLAT1554R** |
| 1500 | 750 | 320 | 1 | **NSYPLAT1573** | **NSYPLAT1573R** |
| 1500 | 750 | 420 | 1 | **NSYPLAT1574** | **NSYPLAT1574R** |
| 1500 | 1000 | 320 | 2 | **NSYPLAT15103** | **NSYPLAT15103R** |
| 1500 | 1000 | 420 | 2 | **NSYPLAT15104** | **NSYPLAT15104R** |
| 1500 | 1250 | 320 | 2 | **NSYPLAT15123** | **NSYPLAT15123R** |
| 1500 | 1250 | 420 | 2 | **NSYPLAT15124** | **NSYPLAT15124R** |

# Enclosures with plinth-type open bottom part, IP 54

## Introduction




Enclosure with open bottom part.

### Characteristics of the PLAZ version

- Enclosure obtained by assembling:
  – 1 sealed top part.
  – 1 plinth-type open bottom part.
  – 2 side parts.
  – 1 or 2 rear panels (according to width).
  – 1 or 2 doors (according to width).
- Indoor use.
- Outdoor use with a canopy (to be ordered separately).
- Protection degree IP 54 according to IEC 60529, for the 5 sides of the enclosure.
- Locking system with handle with a 5 mm double-bar insert block, included in the standard supply. Other blocks with inserts or barrels and keys optionally available.
- Door opening to 120°.
- The open bottom part forms a 60 mm plinth which is fixed to the floor directly or by means of an optional fixing frame, see page **55**, or else it is installed on a semi-embedded plinth, see page **54**.

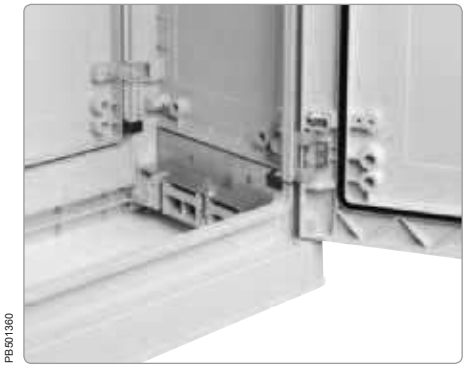


Polyurethane sealing gasket and 120° hinge.

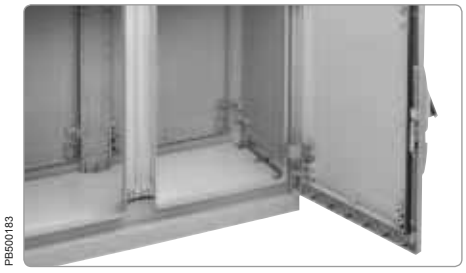


Detail from the plinth-type bottom part, equipped with a cable-entry plate (optional).




Plain mounting plate installed on step slides and compulsory adapter plates in all the enclosures with open bottom part.

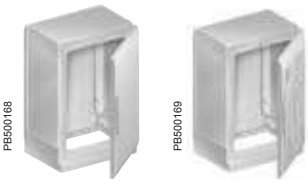


| External dimensions (mm) | | | | References of enclosures with door | |
|---|---|---|---|---|---|
| Height | Width | Depth | N° of doors | Plain | Anti-posting |
| 500 | 500 | 320 | 1 | **NSYPLAZ553** | **NSYPLAZ553R** |
| 500 | 500 | 420 | 1 | **NSYPLAZ554** | **NSYPLAZ554R** |
| 500 | 750 | 320 | 1 | **NSYPLAZ573** | **NSYPLAZ573R** |
| 500 | 750 | 420 | 1 | **NSYPLAZ574** | **NSYPLAZ574R** |
| 500 | 1000 | 320 | 2 | **NSYPLAZ5103** | **NSYPLAZ5103R** |
| 500 | 1000 | 420 | 2 | **NSYPLAZ5104** | **NSYPLAZ5104R** |
| 500 | 1250 | 320 | 2 | **NSYPLAZ5123** | **NSYPLAZ5123R** |
| 500 | 1250 | 420 | 2 | **NSYPLAZ5124** | **NSYPLAZ5124R** |
| 750 | 500 | 320 | 1 | **NSYPLAZ753** | **NSYPLAZ753R** |
| 750 | 500 | 420 | 1 | **NSYPLAZ754** | **NSYPLAZ754R** |
| 750 | 750 | 320 | 1 | **NSYPLAZ773** | **NSYPLAZ773R** |
| 750 | 750 | 420 | 1 | **NSYPLAZ774** | **NSYPLAZ774R** |
| 750 | 1000 | 320 | 2 | **NSYPLAZ7103** | **NSYPLAZ7103R** |
| 750 | 1000 | 420 | 2 | **NSYPLAZ7104** | **NSYPLAZ7104R** |
| 750 | 1250 | 320 | 2 | **NSYPLAZ7123** | **NSYPLAZ7123R** |
| 750 | 1250 | 420 | 2 | **NSYPLAZ7124** | **NSYPLAZ7124R** |
| 1000 | 500 | 320 | 1 | **NSYPLAZ1053** | **NSYPLAZ1053R** |
| 1000 | 500 | 420 | 1 | **NSYPLAZ1054** | **NSYPLAZ1054R** |
| 1000 | 750 | 320 | 1 | **NSYPLAZ1073** | **NSYPLAZ1073R** |
| 1000 | 750 | 420 | 1 | **NSYPLAZ1074** | **NSYPLAZ1074R** |
| 1000 | 1000 | 320 | 2 | **NSYPLAZ10103** | **NSYPLAZ10103R** |
| 1000 | 1000 | 420 | 2 | **NSYPLAZ10104** | **NSYPLAZ10104R** |
| 1000 | 1250 | 320 | 2 | **NSYPLAZ10123** | **NSYPLAZ10123R** |
| 1000 | 1250 | 420 | 2 | **NSYPLAZ10124** | **NSYPLAZ10124R** |
| 1250 | 500 | 320 | 1 | **NSYPLAZ1253** | **NSYPLAZ1253R** |
| 1250 | 500 | 420 | 1 | **NSYPLAZ1254** | **NSYPLAZ1254R** |
| 1250 | 750 | 320 | 1 | **NSYPLAZ1273** | **NSYPLAZ1273R** |
| 1250 | 750 | 420 | 1 | **NSYPLAZ1274** | **NSYPLAZ1274R** |
| 1250 | 1000 | 320 | 2 | **NSYPLAZ12103** | **NSYPLAZ12103R** |
| 1250 | 1000 | 420 | 2 | **NSYPLAZ12104** | **NSYPLAZ12104R** |
| 1250 | 1250 | 320 | 2 | **NSYPLAZ12123** | **NSYPLAZ12123R** |
| 1250 | 1250 | 420 | 2 | **NSYPLAZ12124** | **NSYPLAZ12124R** |
| 1500 | 500 | 320 | 1 | **NSYPLAZ1553** | **NSYPLAZ1553R** |
| 1500 | 500 | 420 | 1 | **NSYPLAZ1554** | **NSYPLAZ1554R** |
| 1500 | 750 | 320 | 1 | **NSYPLAZ1573** | **NSYPLAZ1573R** |
| 1500 | 750 | 420 | 1 | **NSYPLAZ1574** | **NSYPLAZ1574R** |
| 1500 | 1000 | 320 | 2 | **NSYPLAZ15103** | **NSYPLAZ15103R** |
| 1500 | 1000 | 420 | 2 | **NSYPLAZ15104** | **NSYPLAZ15104R** |
| 1500 | 1250 | 320 | 2 | **NSYPLAZ15123** | **NSYPLAZ15123R** |
| 1500 | 1250 | 420 | 2 | **NSYPLAZ15124** | **NSYPLAZ15124R** |

# Enclosures with plinth-type open bottom part and ventilated canopy, IP 44

## Introduction

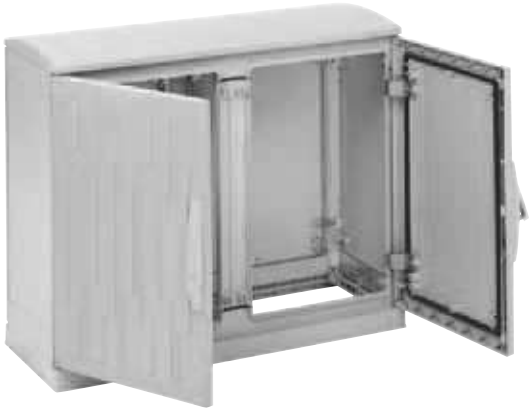
PB501362

Enclosure with plinth-type open bottom part, ventilated canopy and anti-posting door.

### Characteristics of the PLAZT version

- Enclosure obtained by assembling:
  – 1 open top part with canopy.
  – 1 plinth-type open bottom part.
  – 2 side parts.
  – 1 or 2 rear panels (according to width).
  – 1 or 2 doors (according to width).
- Outdoor use.
- Protection degree IP 44 according to IEC 60529, for the 5 sides of the enclosure.
- Protection degree IP 54 with 1 or 2 internal grilles, ref. **NSYCAG125LPF**, to be ordered separately.
- Locking system with handle with a 5 mm double-bar insert block. Other blocks with inserts or barrels and keys optionally available.
- Door opening to 180°.
- Anti-lever system to prevent forcing of the door.
- The open bottom part forms a 60 mm plinth which is fixed to the floor directly or by means of an optional fixing frame, see page **55**, or else it is installed on a semi-embedded plinth, see page **54**.

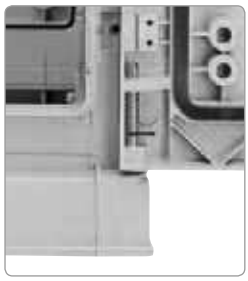
PB501363

Door opening to 180°.


PB501364

Anti-lever security system.


PB501365

Bottom part open for underground cable access.


PB501366

M8 fixing bosses on the inside of the door.


PB500172


PB500173

| External dimensions (mm) | | | | References of enclosures with door | |
|---|---|---|---|---|---|
| Height | Width | Depth | N° of doors | Plain | Anti-posting |
| 500 | 500 | 320 | 1 | **NSYPLAZT553** | **NSYPLAZT553R** |
| 500 | 500 | 420 | 1 | **NSYPLAZT554** | **NSYPLAZT554R** |
| 500 | 750 | 320 | 1 | **NSYPLAZT573** | **NSYPLAZT573R** |
| 500 | 750 | 420 | 1 | **NSYPLAZT574** | **NSYPLAZT574R** |
| 500 | 1000 | 320 | 2 | **NSYPLAZT5103** | **NSYPLAZT5103R** |
| 500 | 1000 | 420 | 2 | **NSYPLAZT5104** | **NSYPLAZT5104R** |
| 500 | 1250 | 320 | 2 | **NSYPLAZT5123** | **NSYPLAZT5123R** |
| 500 | 1250 | 420 | 2 | **NSYPLAZT5124** | **NSYPLAZT5124R** |
| 750 | 500 | 320 | 1 | **NSYPLAZT753** | **NSYPLAZT753R** |
| 750 | 500 | 420 | 1 | **NSYPLAZT754** | **NSYPLAZT754R** |
| 750 | 750 | 320 | 1 | **NSYPLAZT773** | **NSYPLAZT773R** |
| 750 | 750 | 420 | 1 | **NSYPLAZT774** | **NSYPLAZT774R** |
| 750 | 1000 | 320 | 2 | **NSYPLAZT7103** | **NSYPLAZT7103R** |
| 750 | 1000 | 420 | 2 | **NSYPLAZT7104** | **NSYPLAZT7104R** |
| 750 | 1250 | 320 | 2 | **NSYPLAZT7123** | **NSYPLAZT7123R** |
| 750 | 1250 | 420 | 2 | **NSYPLAZT7124** | **NSYPLAZT7124R** |
| 1000 | 500 | 320 | 1 | **NSYPLAZT1053** | **NSYPLAZT1053R** |
| 1000 | 500 | 420 | 1 | **NSYPLAZT1054** | **NSYPLAZT1054R** |
| 1000 | 750 | 320 | 1 | **NSYPLAZT1073** | **NSYPLAZT1073R** |
| 1000 | 750 | 420 | 1 | **NSYPLAZT1074** | **NSYPLAZT1074R** |
| 1000 | 1000 | 320 | 2 | **NSYPLAZT10103** | **NSYPLAZT10103R** |
| 1000 | 1000 | 420 | 2 | **NSYPLAZT10104** | **NSYPLAZT10104R** |
| 1000 | 1250 | 320 | 2 | **NSYPLAZT10123** | **NSYPLAZT10123R** |
| 1000 | 1250 | 420 | 2 | **NSYPLAZT10124** | **NSYPLAZT10124R** |
| 1250 | 500 | 320 | 1 | **NSYPLAZT1253** | **NSYPLAZT1253R** |
| 1250 | 500 | 420 | 1 | **NSYPLAZT1254** | **NSYPLAZT1254R** |
| 1250 | 750 | 320 | 1 | **NSYPLAZT1273** | **NSYPLAZT1273R** |
| 1250 | 750 | 420 | 1 | **NSYPLAZT1274** | **NSYPLAZT1274R** |
| 1250 | 1000 | 320 | 2 | **NSYPLAZT12103** | **NSYPLAZT12103R** |
| 1250 | 1000 | 420 | 2 | **NSYPLAZT12104** | **NSYPLAZT12104R** |
| 1250 | 1250 | 320 | 2 | **NSYPLAZT12123** | **NSYPLAZT12123R** |
| 1250 | 1250 | 420 | 2 | **NSYPLAZT12124** | **NSYPLAZT12124R** |
| 1500 | 500 | 320 | 1 | **NSYPLAZT1553** | **NSYPLAZT1553R** |
| 1500 | 500 | 420 | 1 | **NSYPLAZT1554** | **NSYPLAZT1554R** |
| 1500 | 750 | 320 | 1 | **NSYPLAZT1573** | **NSYPLAZT1573R** |
| 1500 | 750 | 420 | 1 | **NSYPLAZT1574** | **NSYPLAZT1574R** |
| 1500 | 1000 | 320 | 2 | **NSYPLAZT15103** | **NSYPLAZT15103R** |
| 1500 | 1000 | 420 | 2 | **NSYPLAZT15104** | **NSYPLAZT15104R** |
| 1500 | 1250 | 320 | 2 | **NSYPLAZT15123** | **NSYPLAZT15123R** |
| 1500 | 1250 | 420 | 2 | **NSYPLAZT15124** | **NSYPLAZT15124R** |

# Polyester floor-standing enclosures
## Dimensions

### Sealed enclosure

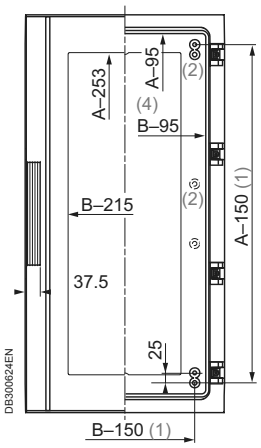


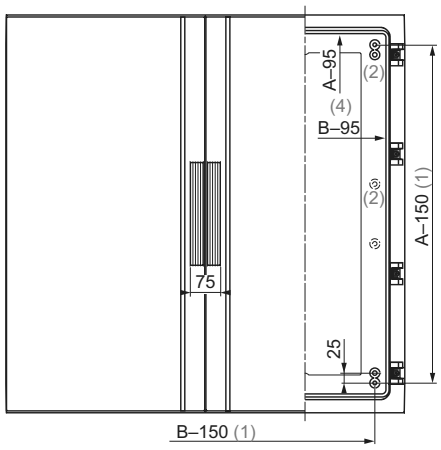


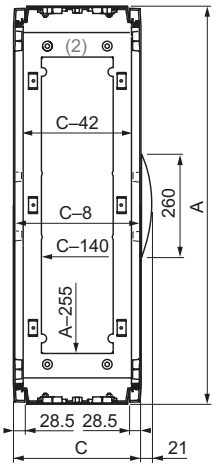


### Enclosure with ventilated canopy

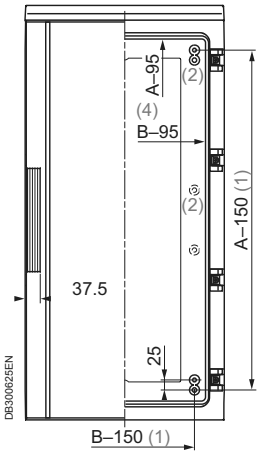


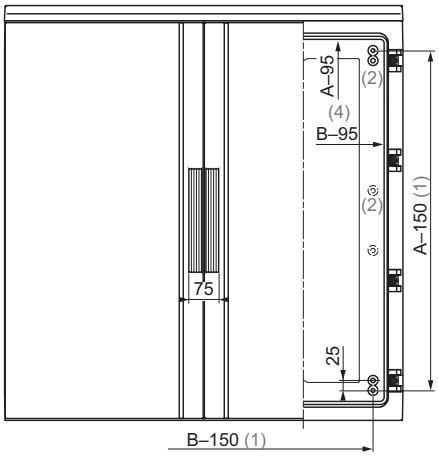


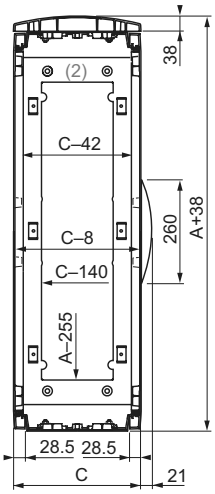


### Common top views

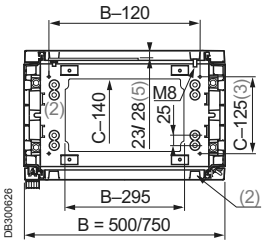


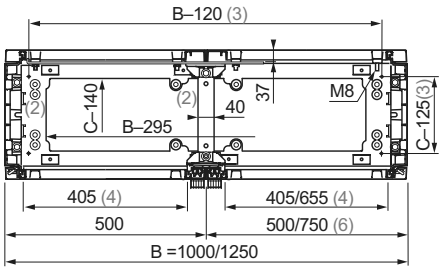

# Polyester floor-standing enclosures
## Dimensions

### Enclosure with plinth-type open bottom part

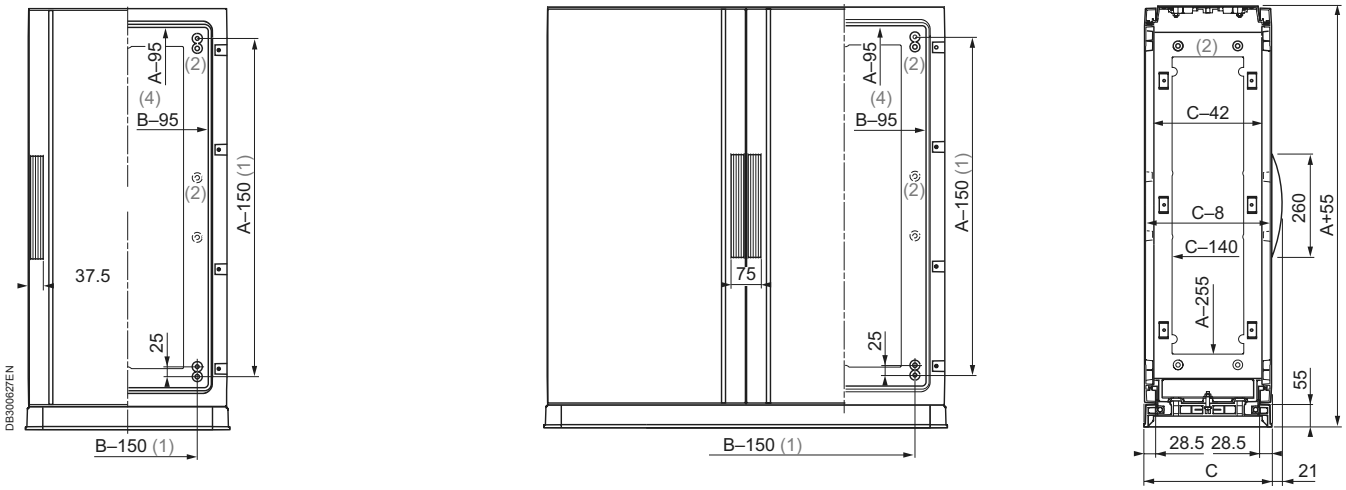


### Enclosure with ventilated canopy and plinth-type open bottom part

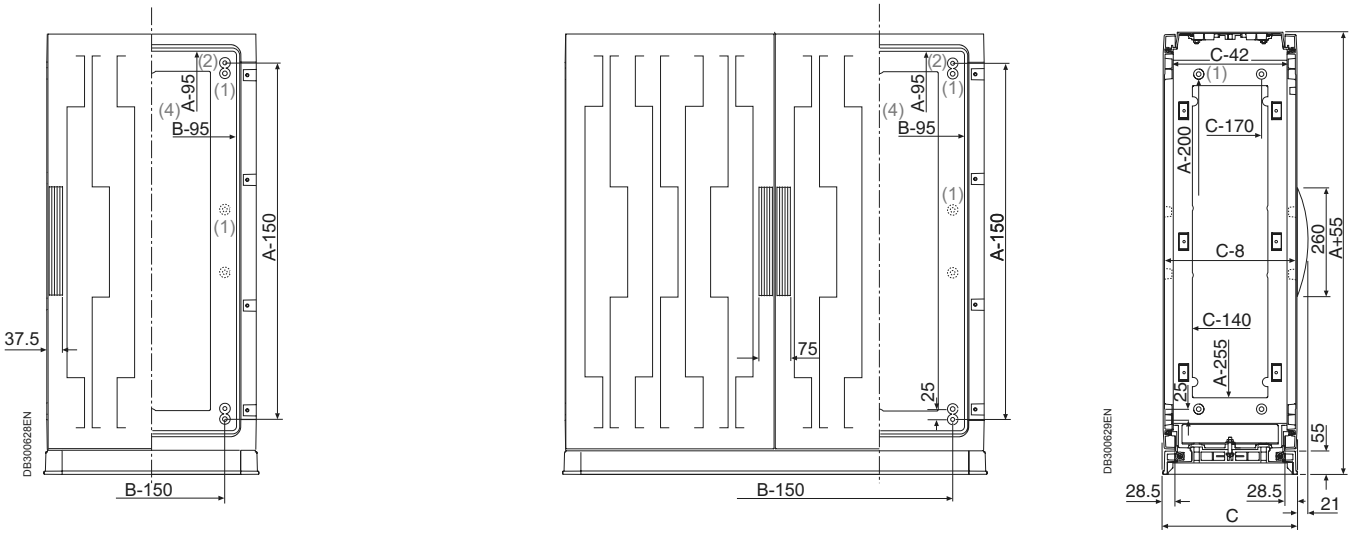


### Common top views

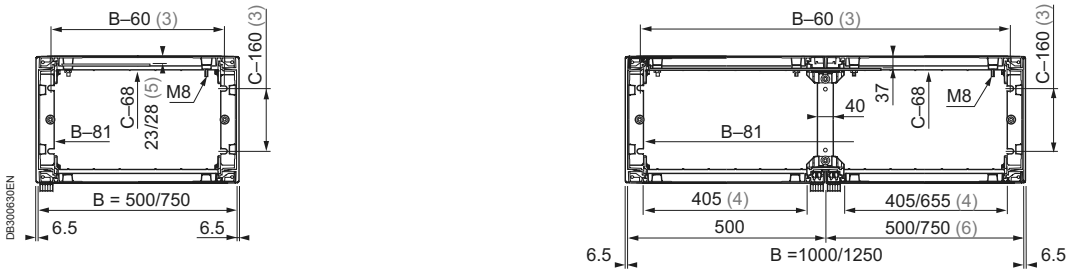


**(1)** 4 bosses with M8 inserts and studs for direct fixing of mounting plates.
**(2)** Bosses designed to accommodate M8 inserts, ref. **NSYTEX8**. They are placed:
– On the back of the enclosure, from the height of 1000 mm. They allow the fixing of partial mounting plates and assorted equipment.
– On the top and bottom parts of the enclosure. They are used for fixing the step slides, an internal door, 19" chassis, etc.
**(3)** Dimensions for fixing on the floor or on a plinth.
**(4)** Entry dimensions, door open.
**(5)** Dimension of 28 mm for enclosures with heights of more than 1000 mm (height after the installation of the plain mounting plates with reinforcement foldings).
**(6)** With a width of 1250 mm in standard supply, 500-mm door on the left and 750-mm door on the right.

# Polyester floor-standing enclosures
## Accessory selection guide

### Mounting accessories


PB500072

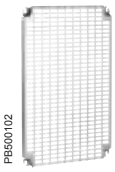
PB500102


PB500151

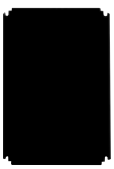
PB500103


PB500174


PR500175

| Enclosure dimensions (mm) | | | | | | | | | |
|---|---|---|---|---|---|---|---|---|---|
| Height | Width | N° of doors | Metallic mounting plates | | Insulating mounting plates | | Modular distribution chassis | | Internal door |
| | | | Plain | Telequick | Polyester | Bakelite | | | |
| | | | Page 64 | Page 65 | Page 64 | | Page 71 | | Page 60 |
| 500 | 500 | 1 | **NSYPMM55** | **NSYPMR55** | **NSYPMA55** | **NSYPMB55** | - | - | **NSYPAPLA55** |
| 500 | 750 | 1 | **NSYPMM75** | **NSYPMR57** | **NSYPMA75** | **NSYPMB75** | - | - | **NSYPAPLA57** |
| 500 | 1000 | 2 | **NSYPMM510** | 2 × **NSYPMR55** | **NSYPMA510** | **NSYPMB510** | - | - | 2 × **NSYPAPLA55** |
| 500 | 1250 | 2 | **NSYPMM55** + **NSYPMM75** | **NSYPMR55** + **NSYPMR57** | **NSYPMA55** + **NSYPMA75** | **NSYPMB55** + **NSYPMB75** | - | - | **NSYPAPLA55** + **NSYPAPLA57** |
| 750 | 500 | 1 | **NSYPMM75** | **NSYPMR75** | **NSYPMA75** | **NSYPMB75** | **NSYDLP76** | **NSYDLP57** | **NSYPAPLA75** |
| 750 | 750 | 1 | **NSYPMM77** | **NSYPMR77** | **NSYPMA77** | **NSYPMB77** | **NSYDLP132** | **NSYDLP99** | **NSYPAPLA77** |
| 750 | 1000 | 2 | **NSYPMM710** | 2 × **NSYPMR75** | **NSYPMA710** | **NSYPMB710** | 2 × **NSYDLP76** | 2 × **NSYDLP57** | 2 × **NSYPAPLA75** |
| 750 | 1250 | 2 | **NSYPMM712** | **NSYPMR75** + **NSYPMR77** | **NSYPMA712** | **NSYPMB712** | **NSYDLP76** + **NSYDLP132** | **NSYDLP57** + **NSYDLP99** | **NSYPAPLA75** + **NSYPAPLA77** |
| 1000 | 500 | 1 | **NSYPMM105** | **NSYPMR105** | **NSYPMA105** | **NSYPMB105** | **NSYDLP114** | **NSYDLP95** | **NSYPAPLA105** |
| 1000 | 750 | 1 | **NSYPMM107** | **NSYPMR107** | **NSYPMA107** | **NSYPMB107** | **NSYDLP198** | **NSYDLP165** | **NSYPAPLA107** |
| 1000 | 1000 | 2 | **NSYPMM1010** | 2 × **NSYPMR105** | **NSYPMA1010** | **NSYPMB1010** | 2 × **NSYDLP114** | 2 × **NSYDLP95** | 2 × **NSYPAPLA105** |
| 1000 | 1250 | 2 | **NSYPMM1012** | **NSYPMR105** + **NSYPMR107** | **NSYPMA1012** | **NSYPMB1012** | **NSYDLP114** + **NSYDLP198** | **NSYDLP95** + **NSYDLP165** | **NSYPAPLA105** + **NSYPAPLA107** |
| 1250 | 500 | 1 | **NSYPMM125** | **NSYPMR125** | **NSYPMA125** | **NSYPMB125** | **NSYDLP133** | **NSYDLP114P** | **NSYPAPLA125** |
| 1250 | 750 | 1 | **NSYPMM127** | **NSYPMR127** | **NSYPMA127** | **NSYPMB127** | **NSYDLP231** | **NSYDLP198P** | **NSYPAPLA127** |
| 1250 | 1000 | 2 | **NSYPMM1210** | 2 × **NSYPMR125** | **NSYPMA1210** | **NSYPMB1210** | 2 × **NSYDLP133** | 2 × **NSYPLD114P** | 2 × **NSYPAPLA125** |
| 1250 | 1250 | 2 | **NSYPMM1212** | **NSYPMR125** + **NSYPMR127** | **NSYPMA1212** | **NSYPMB1212** | **NSYDLP133** + **NSYDLP231** | **NSYDLP114P** + **NSYDLP198P** | **NSYPAPLA125** + **NSYPAPLA127** |
| 1500 | 500 | 1 | **NSYPMM155** | **NSYPMR155** | - | **NSYPMB155** | **NSYDLP171** | **NSYDLP152** | **NSYPAPLA155** |
| 1500 | 750 | 1 | **NSYPMM157** | **NSYPMR157** | - | **NSYPMB157** | **NSYDLP297** | **NSYDLP264** | **NSYPAPLA157** |
| 1500 | 1000 | 2 | **NSYPMM1510** | 2 × **NSYPMR155** | - | **NSYPMB1510** | 2 × **NSYDLP171** | 2 × **NSYDLP152** | 2 × **NSYPAPLA155** |
| 1500 | 1250 | 2 | **NSYPMM1512** | **NSYPMR155** + **NSYPMR157** | - | **NSYPMB1512** | **NSYDLP171** + **NSYDLP297** | **NSYDLP152** + **NSYDLP264** | **NSYPAPLA155** + **NSYPAPLA157** |

### VDI accessories


PB500184


PB500185

| Enclosure dimensions (mm) | | 19" fixed chassis | Number of U | 19" swing chassis | Number of U |
|---|---|---|---|---|---|
| Height | Width | Page 74 | | Page 74 | |
| 500 | 750 | **NSYBRF8PLA** | 8 | **NSYBRP7PLA** | 7 |
| 750 | 750 | **NSYBRF12PLA** + **NSYSPLA75** | 12 | **NSYBRP11PLA** + **NSYSPLA75** | 11 |
| 1000 | 750 | **NSYBRF17PLA** + **NSYSPLA100** | 17 | **NSYBRP16PLA** + **NSYSPLA100** | 16 |
| 1250 | 750 | **NSYBRF21PLA** + **NSYSPLA125** | 21 | **NSYBRP20PLA** + **NSYSPLA125** | 20 |
| 1500 | 750 | **NSYBRF26PLA** + **NSYSPLA150** | 26 | **NSYBRP25PLA** + **NSYSPLA150** | 25 |

# Polyester floor-standing enclosures
## Accessory selection guide

### Main accessories


PB500180

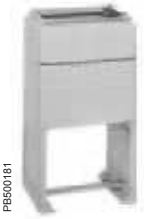
PB500181

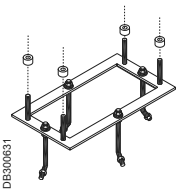
DB300631


PB500182


PB500183

| Enclosure dimensions (mm) | | N plinth | H plinth | Floor-fixing frame | Canopy | Cable-entry plate |
|---|---|---|---|---|---|---|
| | | Height 60 mm | Height 900 mm | | | |
| Width | Depth | Page 54 | | Page 55 | Page 58 | Page 59 |
| 500 | 320 | **NSYZNPLA53** | **NSYZHPLA53** | **NSYMFPLAZ53** | **NSYTJPLA53** | **NSYECPLAZ53** |
| 500 | 420 | **NSYZNPLA54** | **NSYZHPLA54** | **NSYMFPLAZ54** | **NSYTJPLA54** | **NSYECPLAZ54** |
| 750 | 320 | **NSYZNPLA73** | **NSYZHPLA73** | **NSYMFPLAZ73** | **NSYTJPLA73** | **NSYECPLAZ73** |
| 750 | 420 | **NSYZNPLA74** | **NSYZHPLA74** | **NSYMFPLAZ74** | **NSYTJPLA74** | **NSYECPLAZ74** |
| 1000 | 320 | **NSYZNPLA103** | **NSYZHPLA103** | **NSYMFPLAZ103** | **NSYTJPLA103** | **NSYECPLAZ103** |
| 1000 | 420 | **NSYZNPLA104** | **NSYZHPLA104** | **NSYMFPLAZ104** | **NSYTJPLA104** | **NSYECPLAZ104** |
| 1250 | 320 | **NSYZNPLA123** | **NSYZHPLA123** | **NSYMFPLAZ123** | **NSYTJPLA123** | **NSYECPLAZ123** |
| 1250 | 420 | **NSYZNPLA124** | **NSYZHPLA124** | **NSYMFPLAZ124** | **NSYTJPLA124** | **NSYECPLAZ124** |

**Step slides**


PB500176

Page 66

**Uprights and mounting rails**


PB500177

Page 68

**Door retainer**

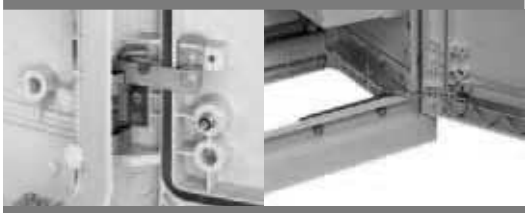
PB500178 PB500179

Page 60

**Door switch**


PB500186

Page 61

**Insert**


PB500187

Page 68

**Document pocket**


PB500188

**VDI accessories and fixings**


PB500189


PB500190

**Coupling Kit**

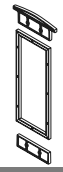
DB300632

Page 52

**Anti-graffiti paint**


PB500191

Page 70

**Handles and inserts**


PB500192


PB500193

Page 62

**Wall-fixing lug**


PB500194

Page 58

# Composition accessories
## Coupling accessories

### Horizontal coupling kits

- For coupling 2 enclosures side by side.
- Coupling frame kit: made up of a coupling kit and the fixings required for installation.
- IP 55 at the coupling point.
- Trim kit: made up of 2 frames for aesthetic fitting of the 2 coupled enclosures.

| For enclosure | References of coupling frame kit for enclosure (mm) | |
|---|---|---|
| Height (mm) | Depth 320 | Depth 420 |
| 500 | **NSYMUPLA53** | **NSYMUPLA54** |
| 750 | **NSYMUPLA73** | **NSYMUPLA74** |
| 1000 | **NSYMUPLA103** | **NSYMUPLA104** |
| 1250 | **NSYMUPLA123** | **NSYMUPLA124** |
| 1500 | **NSYMUPLA153** | **NSYMUPLA154** |

| For enclosure | References of trim kit for enclosure (mm) | |
|---|---|---|
| | Depth 320 | Depth 420 |
| Without canopy | **NSYSUPLA3** | **NSYSUPLA4** |
| With canopy | **NSYSUPLA3T** | **NSYSUPLA4T** |

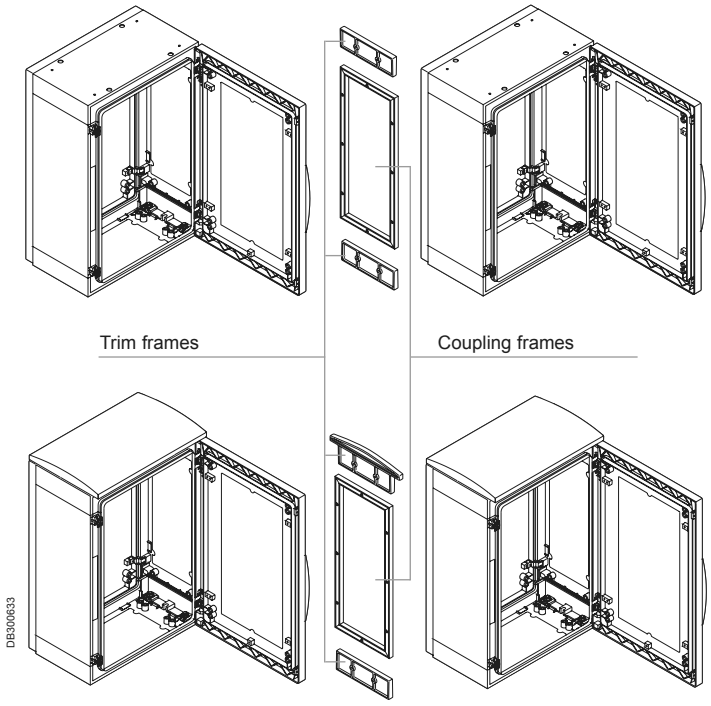

# Composition accessories
## Coupling accessories

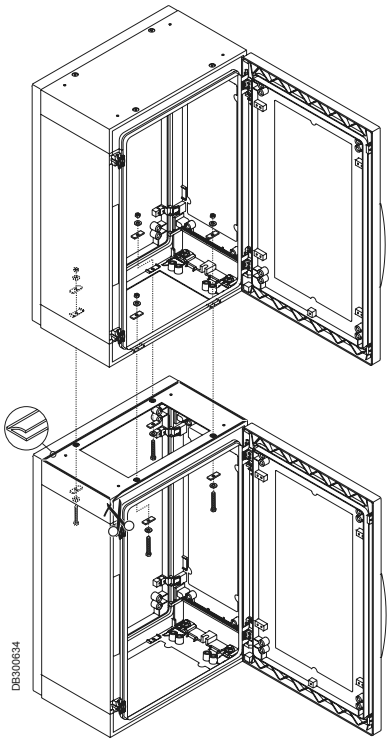


### Vertical coupling kit

- For coupling 2 enclosures on top of one another.
- Kit made up of 3.5 m of adhesive seal and the fixings required for mounting.
- IP 55 at the coupling point.

| Description | Reference |
|---|---|
| Vertical coupling kit | **NSYUVPLA** |

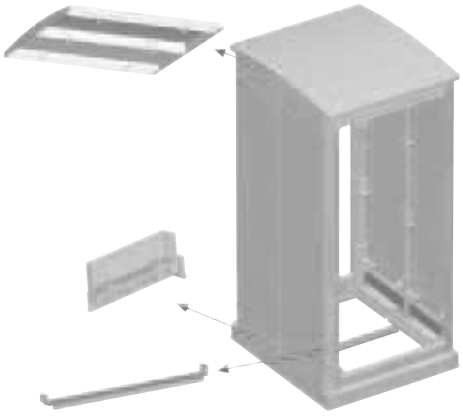


Specific

Configured

### Enhanced depth enclosure

- After industrial machining, the frames of the standard enclosures are coupled in the factory to obtain enhaced depth floor-standing enclosures.
- 3 possible depths: 575, 675 and 775 mm.
- The internal volume of the standard enclosures remains unaffected.
- Possible for the 4 enclosure versions, in particular for 19" applications with widths of 750 and 1250 mm.
- IP 44 in the version with ventilated canopy, IP 54 for the other versions.
- Roof made from polyester reinforced with fibreglass, for dimensions: 750 × 575 mm, 750 × 775 mm, 1250 × 575 mm and 1250 × 775 mm.
- A rear door can be installed in the coupled enclosures. Option of installing 2 sets of step slides (at the front and at the rear).
- Supply or installation in the enclosures of a 19" chassis with side trim plate installed on the step slides:
  – 19 U, height 1000 mm
  – 23 U, height 1250 mm
  – 25 U, height 1500 mm
- Configured offer for PLA and PLAZ versions with depth 575 and 775 mm.

# Composition accessories
## Base accessories


PB500180

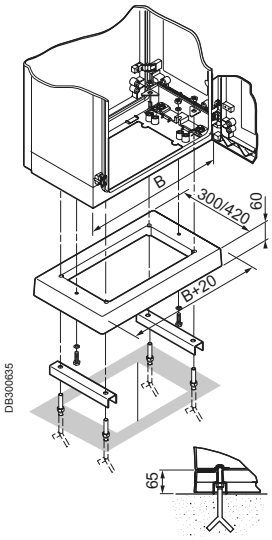


### N Plinth height 60 mm

- Designed to be installed under the closed-bottom enclosures (version PLA or PLAT).
- Polyester reinforced with fibreglass, moulded by hot compression, RAL 7032 grey.

| For floor-standing enclosure (mm) | | Reference |
|---|---|---|
| Width (B) | Depth | |
| 500 | 320 | **NSYZNPLA53** |
| 750 | 320 | **NSYZNPLA73** |
| 1000 | 320 | **NSYZNPLA103** |
| 1250 | 320 | **NSYZNPLA123** |
| 500 | 420 | **NSYZNPLA54** |
| 750 | 420 | **NSYZNPLA74** |
| 1000 | 420 | **NSYZNPLA104** |
| 1250 | 420 | **NSYZNPLA124** |

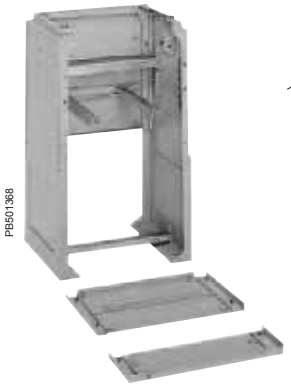
PB501368


PB500181

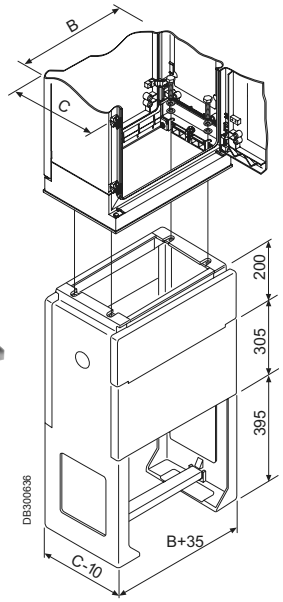


### Buriable H Plinth height 900 mm

- Designed to be installed under the open-bottom enclosures (version PLAZ or PLAZT).
- Polyester reinforced with fibreglass, moulded by hot compression, RAL 7032 grey.
- Front panel with a height of 170 mm, retractable, providing easy access to the inside.
- Fixed front panel with a height of 305 mm, corresponding to the finished floor height area.
- The height above the floor after building-in varies between 200 and 500 mm.
- A metal rail helps to fix the entry cables.
- Lateral uprights with pre-knock-out auxiliary output with ∅ Pg 36 (48 mm).
- A pre-knock-out area is provided at the bottom of the lateral uprights for cable entry, if necessary.
- Delivered with the fixings required for installation.

| For floor-standing enclosure (mm) | | Reference |
|---|---|---|
| Width (B) | Depth (C) | |
| 500 | 320 | **NSYZHPLA53** |
| 750 | 320 | **NSYZHPLA73** |
| 1000 | 320 | **NSYZHPLA103** |
| 1250 | 320 | **NSYZHPLA123** |
| 500 | 420 | **NSYZHPLA54** |
| 750 | 420 | **NSYZHPLA74** |
| 1000 | 420 | **NSYZHPLA104** |
| 1250 | 420 | **NSYZHPLA124** |

Specific

**Optional removable top front plate, with two double-bar locks.**

# Composition accessories
## Base accessories

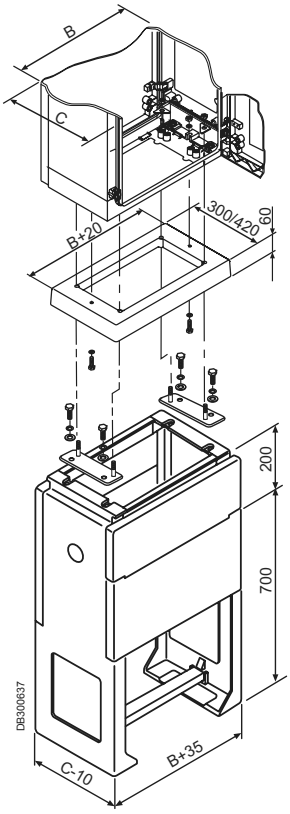


### Connectors between plinths

- Designed to allow the adaptation of a closed-bottom enclosure + N plinth on a H-type partially buried plinth.
- Composition: 2 parts for adapting the centre-to-centre distances.

| For floor-standing enclosure (mm) | Description | Reference |
|---|---|---|
| Depth | | |
| 320 | Linking parts for N plinth on 320-mm H plinth | **NSYAZ3PLA** |
| 420 | Linking parts for N plinth on 420-mm H plinth | **NSYAZ4PLA** |

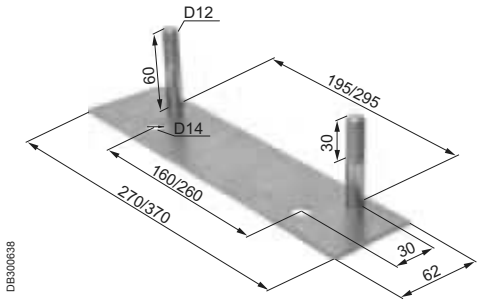


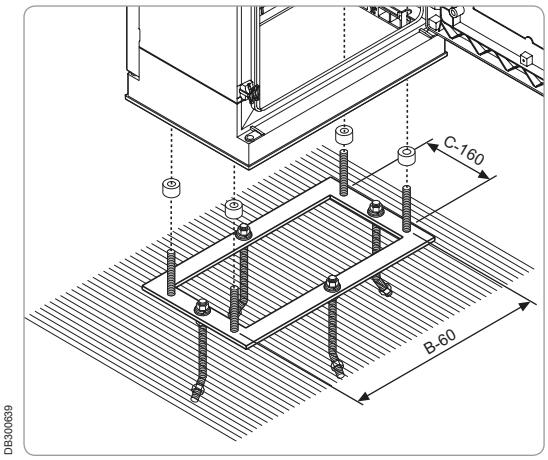


### Floor-standing frame

- Frame for direct fixing on the floor for installing open-bottom enclosures (version PLAZ or PLAZT).
- Material: passivated zinc-coated steel.

| For floor-standing enclosure (mm) | | Reference |
|---|---|---|
| Width (B) | Depth (C) | |
| 500 | 320 | **NSYMFPLAZ53** |
| 750 | 320 | **NSYMFPLAZ73** |
| 1000 | 320 | **NSYMFPLAZ103** |
| 1250 | 320 | **NSYMFPLAZ123** |
| 500 | 420 | **NSYMFPLAZ54** |
| 750 | 420 | **NSYMFPLAZ74** |
| 1000 | 420 | **NSYMFPLAZ104** |
| 1250 | 420 | **NSYMFPLAZ124** |

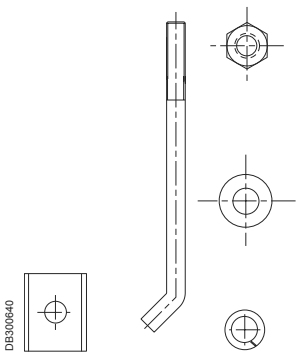


### Floor-fixing studs

Set of four threaded parts and fixings, for fixing the enclosures on concrete plinths.

| Description | Reference |
|---|---|
| Fixing studs | **NSYFSPLAZ** |

# Composition accessories
## Base accessories


PB501738


PB501739

### ZA plinths for PLA enclosure (version PLA and PLAT)

Designed to support and raise the closed-bottom versions of PLA enclosures, in other words, references **NSYPLAxx** or **NSYPLATxx**:
- Polyester material reinforced with fibreglass, moulded by hot compression.
- Guarantees total insulation according to IEC 61439-1.
- Ensures a degree of protection of IP 44 and impact resistance of IK 10.
- Plinth height of 200 mm; stackable to obtain a 400-mm plinth.
- Four floor-attachment points; the symmetry of the parts prevents incorrect assembly.

The frontal parts of the plinth (front and rear) have two stainless-steel screws protected by a plastic cap; these screws, which can be accessed from the outside, make it possible (using an Allen key) to open and remove the frontal parts for easier cable installation.
In stacked position, the bottom plinth can be partially buried.
It is provided with one or two reinforcement cross-rails, adjustable to adapt to the position of the cables.
The reference of the plinth contains all the accessories required for attaching the enclosure to the plinth and for stacking two plinths.

| For floor-standing enclosure | | | | Plinth | | | | Cable-gland area | |
|---|---|---|---|---|---|---|---|---|---|
| Height | Width | Depth | Reference | Height | Width | Depth | Reference | Width | Depth |
| 500 to 1500 | 500 | 320 | **NSYPLA(T)x53** | 200 | 494 | 250 | **NSYZA253** | 360 | 205 |
| 500 to 1500 | 750 | 320 | **NSYPLA(T)x73** | 200 | 744 | 250 | **NSYZA273** | 610 | 205 |
| 500 to 1500 | 1000 | 320 | **NSYPLA(T)x103** | 200 | 994 | 250 | **NSYZA2103** | 860 | 205 |
| 500 to 1500 | 1250 | 320 | **NSYPLA(T)x123** | 200 | 1244 | 250 | **NSYZA2123** | 1100 | 205 |
| 500 to 1500 | 500 | 420 | **NSYPLA(T)x54** | 200 | 494 | 350 | **NSYZA254** | 360 | 305 |
| 500 to 1500 | 750 | 420 | **NSYPLA(T)x74** | 200 | 744 | 350 | **NSYZA274** | 610 | 305 |
| 500 to 1500 | 1000 | 420 | **NSYPLA(T)x104** | 200 | 994 | 350 | **NSYZA2104** | 860 | 305 |
| 500 to 1500 | 1250 | 420 | **NSYPLA(T)x124** | 200 | 1244 | 350 | **NSYZA2124** | 1110 | 305 |


PB501740

### Cable supporting cross-rail

The lateral sides of the plinth are provided with bosses for attaching cross-rails with cut-out profiles, for supporting cables.
The reference of the cross-rail includes all the elements required for assembly.

| For plinth | | Cross-rail |
|---|---|---|
| NSYZA253 | NSYZA254 | **NSYAC320** |
| NSYZA273 | NSYZA274 | **NSYAC560** |
| NSYZA2103 | NSYZA2104 | **NSYAC840** |
| NSYZA2123 | NSYZA2124 | **NSYAC1080** |

### Kit for IP 54

Makes it possible to obtain IP 54 for the plinth and the plinth-enclosure connection Ref. **NSYAEPZA**.

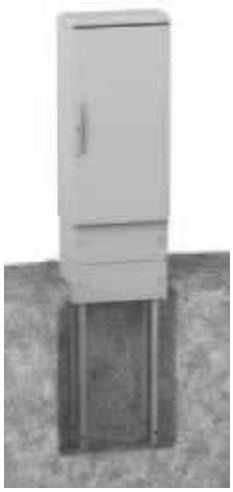
PB501741

### Feet for partially buried installation

Allows the partially buried installation of plinths before completion of the floor.
The plinths are attached by four feet with a standard length of 750 mm.
Possibility of horizontal adjustment of the plinth.
The kit is made up of four feet and fixings, ref. **NSYAEBFZ**.

# Composition accessories
## Base accessories


PB501742


PB501743

### ZZ plinths for PLA enclosure (version PLAZ and PLAZT)

Designed to support and raise the open-bottom versions of PLA enclosures, in other words, references **NSYPLAZ** or **NSYPLAZT**:
- Polyester material reinforced with fibreglass, moulded by hot compression.
- Guarantees total insulation according to IEC 61439-1.
- Ensures a degree of protection of IP 44 and impact resistance of IK 10.

The offer consists of two plinths, with heights of 200 mm and 500 mm.
Four floor-attachment points; the symmetry of the parts prevents incorrect assembly.
The frontal parts (front and rear) are removed from the inside. Removing them makes it easier to install the cables.
The 500-mm plinth can be partially buried.
It is provided with one or two reinforcement cross-rails, adjustable to adapt to the position of the cables.

The reference of the plinth contains all the accessories required for attaching the enclosure to the plinth.

| For floor-standing enclosure | | | | Plinth | | | | Cable-gland area | |
|---|---|---|---|---|---|---|---|---|---|
| Height | Width | Depth | Reference | Height | Width | Depth | Reference | Width | Depth |
| 500 to 1500 | 500 | 320 | **NSYPLAZ(T)x53** | 200 | 535 | 310 | **NSYZZ253** | 419 | 252 |
| 500 to 1500 | 750 | 320 | **NSYPLAZ(T)x73** | 200 | 785 | 310 | **NSYZZ273** | 669 | 252 |
| 500 to 1500 | 1000 | 320 | **NSYPLAZ(T)x103** | 200 | 1035 | 310 | **NSYZZ2103** | 919 | 252 |
| 500 to 1500 | 1250 | 320 | **NSYPLAZ(T)x123** | 200 | 1285 | 310 | **NSYZZ2123** | 1169 | 252 |
| 500 to 1500 | 500 | 420 | **NSYPLAZ(T)x54** | 200 | 535 | 410 | **NSYZZ254** | 419 | 352 |
| 500 to 1500 | 750 | 420 | **NSYPLAZ(T)x74** | 200 | 785 | 410 | **NSYZZ274** | 669 | 352 |
| 500 to 1500 | 1000 | 420 | **NSYPLAZ(T)x104** | 200 | 1035 | 410 | **NSYZZ2104** | 919 | 352 |
| 500 to 1500 | 1250 | 420 | **NSYPLAZ(T)x124** | 200 | 1285 | 410 | **NSYZZ2124** | 1169 | 352 |
| 500 to 1500 | 500 | 320 | **NSYPLAZ(T)x53** | 500 | 535 | 310 | **NSYZZ553** | 419 | 252 |
| 500 to 1500 | 750 | 320 | **NSYPLAZ(T)x73** | 500 | 785 | 310 | **NSYZZ573** | 669 | 252 |
| 500 to 1500 | 1000 | 320 | **NSYPLAZ(T)x103** | 500 | 1035 | 310 | **NSYZZ5103** | 919 | 252 |
| 500 to 1500 | 1250 | 320 | **NSYPLAZ(T)x123** | 500 | 1285 | 310 | **NSYZZ5123** | 1169 | 252 |
| 500 to 1500 | 500 | 420 | **NSYPLAZ(T)x54** | 500 | 535 | 410 | **NSYZZ554** | 419 | 352 |
| 500 to 1500 | 750 | 420 | **NSYPLAZ(T)x74** | 500 | 785 | 410 | **NSYZZ574** | 669 | 352 |
| 500 to 1500 | 1000 | 420 | **NSYPLAZ(T)x104** | 500 | 1035 | 410 | **NSYZZ5104** | 919 | 352 |
| 500 to 1500 | 1250 | 420 | **NSYPLAZ(T)x124** | 500 | 1285 | 410 | **NSYZZ5124** | 1169 | 352 |


PB501744

### Cable supporting cross-rail

The lateral sides of the plinths are provided with bosses for attaching cross-rails with cut-out profiles, for supporting cables.
The reference of the cross-rail includes all the elements required for assembly.

| For plinth | | | | Cross-rail |
|---|---|---|---|---|
| NSYZZ253 | NSYZZ254 | NSYZZ553 | NSYZZ554 | **NSYAC360** |
| NSYZZ273 | NSYZZ274 | NSYZZ573 | NSYZZ574 | **NSYAC600** |
| NSYZZ2103 | NSYZZ2104 | NSYZZ5103 | NSYZZ5104 | **NSYAC840** |
| NSYZZ2123 | NSYZZ2124 | NSYZZ5123 | NSYZZ5124 | **NSYAC1120** |


PB501737

### Outside opening kit

The 200-mm front part of the 200- and 500-mm plinths can be opened from the outside, after installing a kit made up of two locks with double-bar insert, ref. **NSYAELZ**.

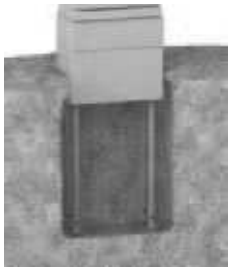
PB501745

### Feet for partially buried installation

Allows the partially buried installation of plinths before completion of the floor. The plinths are attached by four feet with a standard length of 750 mm.
Possibility of horizontal adjustment of the plinth.
The reference includes a kit made up of four feet and fixings, ref. **NSYAEBFZ**.

# Composition accessories
## Top-mounting accessories
## Fixing accessories


PB501369

### Canopy

- Polyester material reinforced with fibreglass, moulded by hot compression, self-extinguishing, RAL 7032 grey.
- It can be installed in all enclosure models.
- High resistance to impacts, temperature and bad weather.
- Delivered with the fixings required for installation.
- Increases the height (A) of the enclosure by 38 mm, without modifying its width or depth.
- Essential for outdoor use.

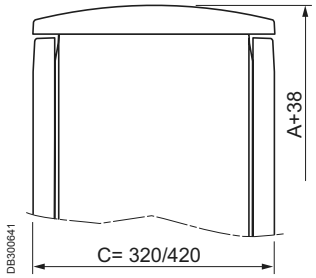

DB300641

| For enclosure (mm) | | Reference |
|---|---|---|
| Width | Depth (C) | |
| 500 | 320 | **NSYTJPLA53** |
| 750 | 320 | **NSYTJPLA73** |
| 1000 | 320 | **NSYTJPLA103** |
| 1250 | 320 | **NSYTJPLA123** |
| 500 | 420 | **NSYTJPLA54** |
| 750 | 420 | **NSYTJPLA74** |
| 1000 | 420 | **NSYTJPLA104** |
| 1250 | 420 | **NSYTJPLA124** |


PB501055

### Grille for IP 54 instead of IP 44

- For enclosure versions PLAT and PLAZT.
- It is installed from the inside in the upper ventilation opening.
- Delivered with G2 M1 standard synthetic filter, see **ClimaSys** section.
- 1 grille for 500 and 750 mm wide enclosures, 2 grilles for 1000 and 1250 mm wide enclosures.
- Prevents the entry of dust and provides the enclosure with IP 5X protection at the top.
- Maintains the possibility of ventilation.

| Description | Reference |
|---|---|
| Outlet grille | **NSYCAG125LPF** |


PB500194

### Wall-fixing lugs

- Fixing on the sides by 4 or 6 lugs in horizontal position (6 lugs for enclosures with height ≥ 1000 mm).
- Drilling positions and marks inside the side panels.
- Passivated zinc-coated material.
- Maximum acceptable load: 180 kg.
- Set of 6 lugs and fixings.
- 10 mm fixing plane on the rear of the enclosure plane.

| Description | Reference |
|---|---|
| Wall-fixing lugs | **NSYFMPLA** |


Specific

**Available stainless-steel wall-fixing lugs.**

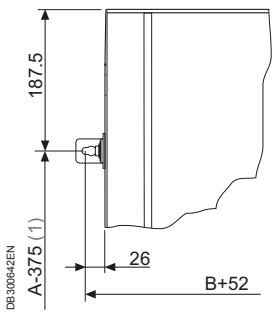

DB300642EN

**(1)** For enclosures with height ≥ 1000 mm, 1 extra lug at the centre of the A-375 side.

# Composition accessories
## Cable-entry accessories

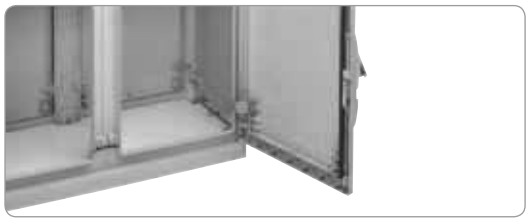
PB500183

### Cable-entry plate

- Designed to be installed inside the enclosures with open bottom part (version PLAZ or PLAZT).
- Polyester material reinforced with fibreglass, thickness 4 mm.
- Easy drilling in specific customised version.
- Delivered with the fixings required for installation.
- Incompatibility with: adapter plates, step slides, internal door and chassis for modular distribution.

| For enclosure (mm) | | Reference |
|---|---|---|
| Width (B) | Depth (C) | |
| 500 | 320 | **NSYECPLAZ53** |
| 750 | 320 | **NSYECPLAZ73** |
| 1000 | 320 | **NSYECPLAZ103** |
| 1250 | 320 | **NSYECPLAZ123** |
| 500 | 420 | **NSYECPLAZ54** |
| 750 | 420 | **NSYECPLAZ74** |
| 1000 | 420 | **NSYECPLAZ104** |
| 1250 | 420 | **NSYECPLAZ124** |

### Cable-entry plate (1-door enclosure)

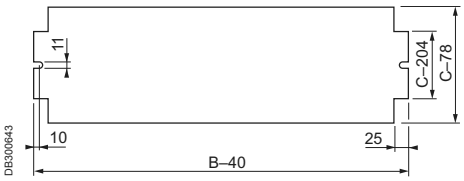


### Cable-entry plate (2-door enclosure)

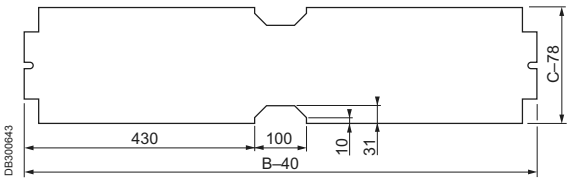

# Composition accessories
## Door and door accessories







## Internal door

- Aluminium door, RAL 7032 grey.
- Designed for direct installation in enclosures with sealed bottom part. In the enclosures with the bottom part open, installation can be performed by ordering the necessary adapter plates, ref. **NSYPTZ●●●**.
- 2 depthwise mounting positions (1) according to the chosen M8 impressions, on the top and bottom parts of the enclosure, for fixing.
- Lock with 5-mm double-bar inserts.
- Delivered with M8 brass inserts and fixings.
- Incompatibility with: modular distribution chassis, 19" chassis, cable-entry plate and door retainer, ref. **NSYRETPLAU**.

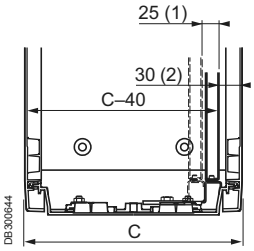


(1) Two positions for depthwise installation.
(2) The 2nd position moves the position of the internal door back by 25 mm.

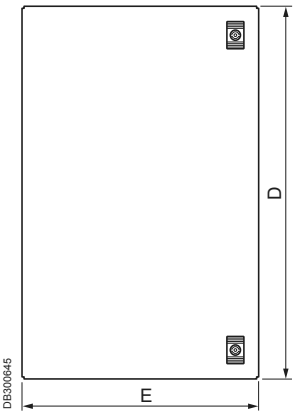


| For enclosure (mm) | | Reference | Internal door dimensions | | Weight (kg) |
|---|---|---|---|---|---|
| Height | Width | | D | E | |
| 500 | 500 | **NSYPAPLA55** | 398 | 398 | 1.6 |
| 500 | 750 | **NSYPAPLA57** | 398 | 648 | 2.2 |
| 500 | 1000 | 2 × **NSYPAPLA55** | 398 | 796 (2 × 398) | 3.2 (2 × 1.6) |
| 500 | 1250 | **NSYPAPLA55** + **NSYPAPLA57** | 398 | 1046 (398 + 648) | 3.8 (1.6 + 2.2) |
| 750 | 500 | **NSYPAPLA75** | 648 | 398 | 2.2 |
| 750 | 750 | **NSYPAPLA77** | 648 | 648 | 3.1 |
| 750 | 1000 | 2 × **NSYPAPLA75** | 648 | 796 (2 × 398) | 4.4 (2 × 2.2) |
| 750 | 1250 | **NSYPAPLA75** + **NSYPAPLA77** | 648 | 1046 (398 + 648) | 5.3 (2.2 + 3.1) |
| 1000 | 500 | **NSYPAPLA105** | 898 | 398 | 2.8 |
| 1000 | 750 | **NSYPAPLA107** | 898 | 648 | 4.1 |
| 1000 | 1000 | 2 × **NSYPAPLA105** | 898 | 796 (2 × 398) | 5.4 (2 × 2.8) |
| 1000 | 1250 | **NSYPAPLA105** + **NSYPAPLA107** | 898 | 1046 (398 + 648) | 6.9 (2.8 + 4.1) |
| 1250 | 500 | **NSYPAPLA125** | 1148 | 398 | 3.4 |
| 1250 | 750 | **NSYPAPLA127** | 1148 | 648 | 5 |
| 1250 | 1000 | 2 × **NSYPAPLA125** | 1148 | 796 (2 × 398) | 6.8 (2 × 3.4) |
| 1250 | 1250 | **NSYPAPLA125** + **NSYPAPLA127** | 1148 | 1046 (398 + 648) | 8.4 (3.4 + 5) |
| 1500 | 500 | **NSYPAPLA155** | 1398 | 398 | 4 |
| 1500 | 750 | **NSYPAPLA157** | 1398 | 648 | 6 |
| 1500 | 1000 | 2 × **NSYPAPLA155** | 1398 | 796 (2 × 398) | 8 (2 × 4) |
| 1500 | 1250 | **NSYPAPLA155** + **NSYPAPLA157** | 1398 | 1046 (398 + 648) | 10 (4 + 6) |




**NSYRETPLA**




**NSYRETPLAU**

## Door retainer

- Designed to adapt directly to the enclosure.
- 2 models available according to the type of enclosure:
– 1 model opening to 110° for enclosure versions PLA, PLAZ and PLAT.
– 1 model with 2 positions, 90° and 120°, for all the versions (warning: this solution is incompatible with certain accessories), see below.
- Can be installed on a door opening to the left or right indistinctly.
- Material: galvanised steel.
- Delivered with the fixings required for installation.

| For enclosure | Reference |
|---|---|
| Version PLA, PLAZ, PLAT | **NSYRETPLA** |
| For all versions | **NSYRETPLAU** |

**Note:** Ref. **NSYRETPLAU** is incompatible with internal doors, modular distribution chassis, step slides, adapter plates and cable-entry plates. In the event of incompatibility, use ref. **NSYRETPLAZ**.

# Composition accessories
## Door and door accessories


PB500186

### Door switch

- Supply: switch, fixing bracket and fixings.
- NC + NO switch.
- Incompatible with the rear door and modular distribution chassis.

| Description | Reference |
|---|---|
| Door switch | **NSYSNLPLA** |


PB501371

### Protection and support screen

- Protective screen made from transparent polycarbonate, protecting access to the switchgear of small enclosures.
- The screen is fixed using accessory, ref. **NSYSPTR77**, to be ordered separately.
- The screens and fixing accessories are to be ordered in multiples of 5.

| For enclosure (mm) | | Reference |
|---|---|---|
| Width (A) | Height (C) | |
| 500 | 500 | **NSYPPTR55** |
| 750 | 500 | **NSYPPTR57** |
| 500 | 750 | **NSYPPTR75** |
| 750 | 750 | **NSYPPTR77** |

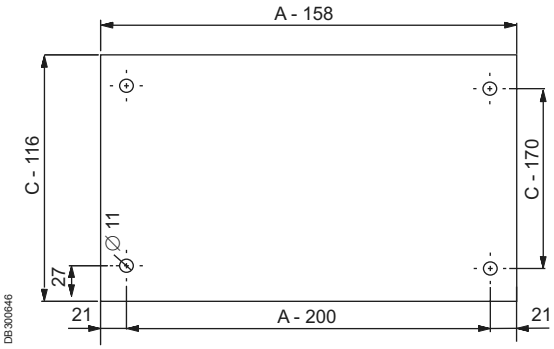

DE300646

# Composition accessories
## Locking system

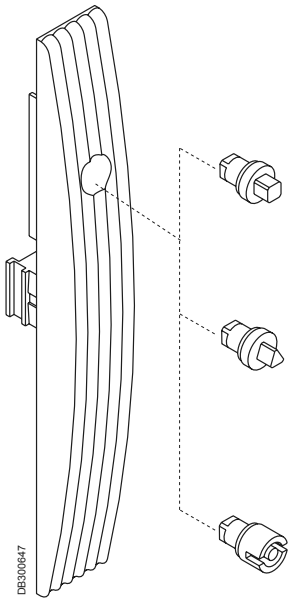


### Locks with escutcheon and without handle

- Standard supply for the enclosures with sealed top and bottom parts (PLA version).
- With 5 mm double-bar insert.
- PA6 material charged with fibreglass.
- RAL 7032 grey.
- Fire resistance: 650 °C.
- Resistance to external mechanical impacts: IK 10.
- Insert breakage torque: 15 daN.

### Options of changing the form inserts (supplied with the required operating key)

| Description | Reference |
|---|---|
| 7 mm square insert | **NSYTC7CRN** |
| 8 mm square insert | **NSYTC8CRN** |
| 6.5 mm triangular insert | **NSYTT6CRN** |
| 8 mm triangular insert | **NSYTT8CRN** |
| 5 mm double-bar insert | **NSYTDB5PLA** |




**NSYBCPLA**

### Padlocking device

- Padlocking accessory, preventing access to the lock-control insert. Opening diameter: 14 mm.

| Description | Reference |
|---|---|
| Padlocking device | **NSYBCPLA** |

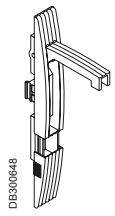


**NSYEBMPLA**

### Options of changing for a handle lock

- Option of changing the escutcheon and the insert for a handle lock, ref. **NSYEBMPLA**, delivered without barrel or insert block.
- The insert or barrel are to be chosen from the option table on the next page.

# Composition accessories
## Locking system

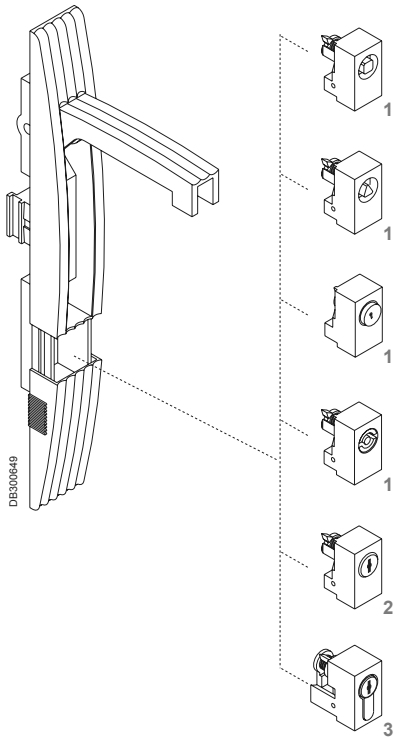


**1** Block with form insert.
**2** Block with cylindrical barrel.
**3** Block with semi-cylindrical barrel.

## Lock with handle

- Ergonomic locking system with pivoting handle installed as standard on enclosures with ventilated canopy and/or open bottom part (versions PLAT, PLAZ and PLAZT), with a 5 mm double-bar insert block.
- Material: PA6 charged with 30% fibreglass.
- RAL 7032 grey.
- Fire resistance: 650 °C.
- Resistance to external mechanical impacts: IK 10.

### Options of changing the form-insert blocks (supplied with the required operating key)

| Description | Reference |
|---|---|
| Block, 6 mm square insert | **NSYINS61** |
| Block, 7 mm square insert | **NSYINS71** |
| Block, 8 mm square insert | **NSYINS81** |
| Block, 6.5 mm triangular insert | **NSYINT61** |
| Block, 8 mm triangular insert | **NSYINT81** |
| Push-button | **NSYTSPLA** |
| Double bar | **NSYINDB51** |

### Options of changing for blocks with cylindrical barrels

| Type of key | Reference |
|---|---|
| 405 E key | **NSYIN405E1** |
| 421 E key | **NSYIN421E1** |
| 455 key | **NSYIN4551** |
| 1242 E key | **NSYIN1242E1** |
| 1332 E key | **NSYIN1332E1** |
| 2131 A key | **NSYIN2131A1** |
| 2132 A key | **NSYIN2132A1** |
| 2331 A key | **NSYIN2331A1** |
| 2433 A key | **NSYIN2433A1** |

| Type of key | Reference |
|---|---|
| 2452 E key | **NSYIN2452E1** |
| 3113 A key | **NSYIN3113A1** |
| 3122 E key | **NSYIN3122E1** |
| 3123 A key | **NSYIN3123A1** |
| 3133 A key | **NSYIN3133A1** |
| 3422 E key | **NSYIN3422E1** |
| 3432 E key | **NSYIN3432E1** |
| EDF 1300 key | **NSYINF1301** |
| EDF 1400 key | **NSYINF1401** |

### Options of changing for blocks with semi-cylindrical barrels

| Description | Reference |
|---|---|
| 1242 E key | **NSYIN1242E2** |
| DIN adapter | **NSYINDIN2** |
| JIS key | **NSYINKJIS2** |
| Reinforced key | **NSYINKR2** |
| FAC key | **NSYINKFAC2** |




**NSYCBCMPLA**




**NSYEBPLA**

### Options of changing the handle

- Changing the handle for a handle including a padlocking device (∅ 10 mm) allowing the handle to be locked.
- Option of changing the handle lock for a lock with an escutcheon and without handle, delivered without insert. The insert is to be chosen from the option table on the previous page:

| Description | Reference |
|---|---|
| Padlocking handle | **NSYCBCMPLA** |
| Escutcheon without handle, without insert | **NSYEBPLA** |

# Mounting accessories
## Installation accessories


PB501374


PB501375

## Metallic mounting plate and insulating mounting plate

### Plain mounting plate

- Galvanised sheet-steel mounting plate.
- Direct installation on M8 inserts at the rear of the enclosure or on step slides for depth adjustment (see page **66**). The enclosures with height of ≥ 1000 mm have intermediate impressions for installing mounting plates of a lesser height (M8 inserts, ref. **NSYTEX8**, to be ordered separately).
- In the 2-door enclosures, it is possible to install 1 complete mounting plate or 2 individual mounting plates.
- Maximum acceptable load: 150 kg/m².
- Thickness: 2.5 mm.

### Insulating mounting plate

- Bakelite mounting plate, RAL 9005 black.
- Polyester mounting plate, RAL 7035.
- Maximum acceptable load: 150 kg/m².
- Thickness: 4 mm for the 55 and 75 plates, 5 mm for the other plates.

| For enclosure (mm) | | Mounting plate references | | | Surf. (dm²) | H (mm) |
|---|---|---|---|---|---|---|
| Height (A) | Width (B) | Plain | Insulating | | | |
| | | | Bakelite | Polyester | | |
| 500 | 500 | **NSYPMM55** | **NSYPMB55** | **NSYPMA55** | 14 | - |
| 500 | 750 | **NSYPMM75** | **NSYPMB75** | **NSYPMA75** | 24 | - |
| 500 | 1000 | **NSYPMM510** | **NSYPMB510** | **NSYPMA510** | 32 | 437.5 |
| 500 | 1250 | **NSYPMM55** + **NSYPMM75** | **NSYPMB55** + **NSYPMB75** | **NSYPMA55** + **NSYPMA75** | - | - |
| 750 | 500 | **NSYPMM75** | **NSYPMB75** | **NSYPMA75** | 24 | - |
| 750 | 750 | **NSYPMM77** | **NSYPMB77** | **NSYPMA77** | 40 | - |
| 750 | 1000 | **NSYPMM710** | **NSYPMB710** | **NSYPMA710** | 54 | 437.5 |
| 750 | 1250 | **NSYPMM712** | **NSYPMB712** | **NSYPMA712** | 70 | 687.5 |
| 1000 | 500 | **NSYPMM105** | **NSYPMB105** | **NSYPMA105** | 33 | - |
| 1000 | 750 | **NSYPMM107** | **NSYPMB107** | **NSYPMA107** | 55 | - |
| 1000 | 1000 | **NSYPMM1010** | **NSYPMB1010** | **NSYPMA1010** | 74 | 437.5 |
| 1000 | 1250 | **NSYPMM1012** | **NSYPMB1012** | **NSYPMA1012** | 96 | 687.5 |
| 1250 | 500 | **NSYPMM125** | **NSYPMB125** | **NSYPMA125** | 42 | - |
| 1250 | 750 | **NSYPMM127** | **NSYPMB127** | **NSYPMA127** | 70 | - |
| 1250 | 1000 | **NSYPMM1210** | **NSYPMB1210** | **NSYPMA1210** | 96 | 437.5 |
| 1250 | 1250 | **NSYPMM1212** | **NSYPMB1212** | **NSYPMA1212** | 124 | 687.5 |
| 1500 | 500 | **NSYPMM155** | **NSYPMB155** | **-** | 51 | - |
| 1500 | 750 | **NSYPMM157** | **NSYPMB157** | **-** | 85 | - |
| 1500 | 1000 | **NSYPMM1510** | **NSYPMB1510** | **-** | 118 | 437.5 |
| 1500 | 1250 | **NSYPMM1512** | **NSYPMB1512** | **-** | 152 | 687.5 |

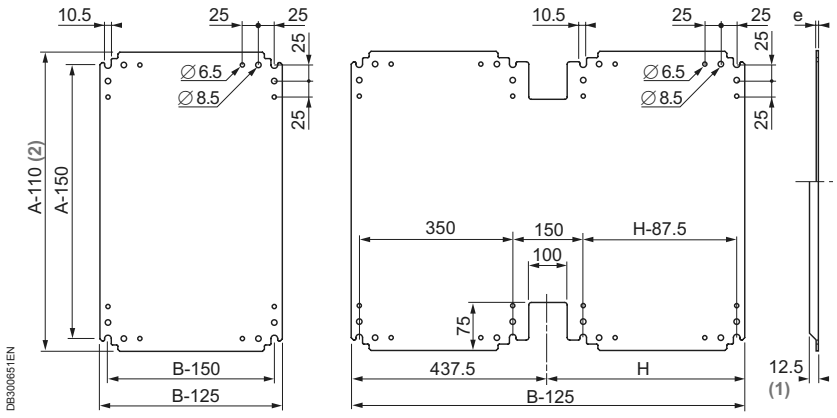


(1) Reinforcing fold for steel mounting plate with heights and widths ≥ 1000 mm.
(2) A-125 for references **NSYPMM1010** to **NSYPMM1512**, A-120 for the polyester mounting plate, ref. **NSYPMA●●●**.

Note: The diagrams above relate to the metal mounting plates. The mounting plates made from insulating material only have 4 or 8 main fixing points and the external dimensions of the diagrams.

# Mounting accessories
## Installation accessories

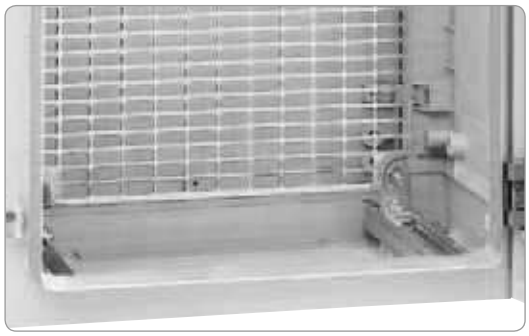
PB501376

## Telequick mounting plate

- It allows any switchgear to be mounted on the same plane without drilling or tapping.
- Grille made from galvanised sheet steel, with 11 × 26 mm drill holes, with a step of 15 × 30 mm, for direct installation, with clip nuts, of all the devices with fixing at 2, 3 or 4 points, by screws with diameters of 3, 4, 5 or 6 mm.
- Direct installation on M8 inserts at the rear of the enclosure or on step slides for depth adjustment (see page **66**). The enclosures with height of ≥ 1000 mm have intermediate impressions for installing mounting plates of a lesser height (M8 inserts, ref. **NSYTEX8**, to be ordered separately).
- Maximum acceptable load: 150 kg/m².

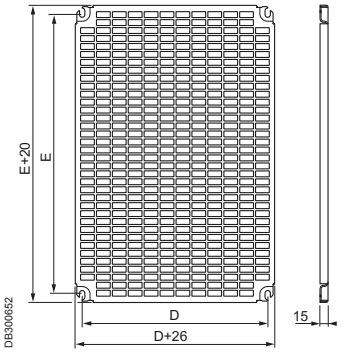


| For enclosure (mm) | | Reference | Dimensions (mm) | | Surface (dm²) |
|---|---|---|---|---|---|
| Height | Width | | E | D | |
| 500 | 500 | **NSYPMR55** | 350 | 350 | 15.3 |
| 500 | 750 | **NSYPMR57** | 350 | 600 | 24.6 |
| 500 | 1000 | 2 × **NSYPMR55** | 350 | 2 × 350 | 30.6 (2 × 15.3) |
| 500 | 1250 | **NSYPMR55** + **NSYPMR57** | 350 | 350<br>600 | 39.9 (15.3 + 24.6) |
| 750 | 500 | **NSYPMR75** | 600 | 350 | 25.5 |
| 750 | 750 | **NSYPMR77** | 600 | 600 | 51.1 |
| 750 | 1000 | 2 × **NSYPMR75** | 600 | 2 × 350 | 51 (2 × 25.5) |
| 750 | 1250 | **NSYPMR75** + **NSYPMR77** | 600 | 350<br>600 | 76.6 (25.5 + 51.1) |
| 1000 | 500 | **NSYPMR105** | 850 | 350 | 35.7 |
| 1000 | 750 | **NSYPMR107** | 850 | 600 | 57.5 |
| 1000 | 1000 | 2 × **NSYPMR105** | 850 | 2 × 350 | 71.4 ( 2 × 35.7) |
| 1000 | 1250 | **NSYPMR105** + **NSYPMR107** | 850 | 350<br>600 | 93.2 (35.7 + 57.5) |
| 1250 | 500 | **NSYPMR125** | 1100 | 350 | 45.9 |
| 1250 | 750 | **NSYPMR127** | 1100 | 600 | 74 |
| 1250 | 1000 | 2 × **NSYPMR125** | 1100 | 2 × 350 | 91.8 (2 × 45.9) |
| 1250 | 1250 | **NSYPMR125** + **NSYPMR127** | 1100 | 350<br>600 | 119.9 (45.9 + 74) |
| 1500 | 500 | **NSYPMR155** | 1350 | 350 | 56.1 |
| 1500 | 750 | **NSYPMR157** | 1350 | 600 | 90.4 |
| 1500 | 1000 | 2 × **NSYPMR155** | 1350 | 2 × 350 | 112.2 (2 × 56.1) |
| 1500 | 1250 | **NSYPMR155** + **NSYPMR157** | 1350 | 350<br>600 | 146.5 (56.1 + 90.4) |

# Mounting accessories
## Installation accessories


PB500176

### Step slides

- Set of 4 step slides with brackets allowing continuous depth adjustment of the mounting plate, with a pitch of 25 mm.
- Designed for direct installation in the enclosures with sealed bottom part (versions PLA or PLAT).
- In the enclosures with open bottom part (versions PLAZ or PLAZT), installation is made possible by adding the relevant adapter plates (see tables below and description on the next page).
- Material: bracket with steel M8 stud on aluminium rail.
- Fixing on the top and bottom parts of the enclosure by means of M8 inserts and screws (supplied).
- Incompatibility with: internal door, modular distribution chassis, 19" chassis, cable-entry plate and door retainer, ref. **NSYRETPLAU**.

| For enclosure | | Reference | |
|---|---|---|---|
| Depth (mm) | N° of doors | Step slides | Adapter plates |
| 320 | 1 | **NSYDPLA3** | **NSYPTZ3** |
| 420 | 1 | **NSYDPLA4** | **NSYPTZ4** |
| 320 | 2 | 2 × **NSYDPLA3** | **NSYPTZ32P** |
| 420 | 2 | 2 × **NSYDPLA4** | **NSYPTZ42P** |


PB501377

**NSYDPLA**

### Installation of step slide ref. NSYDPLA●●●

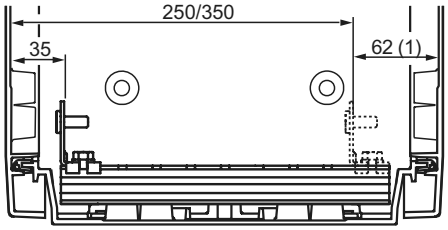

DB300653

(1) 57 mm with one transparent door.


PB501378

**NSYDPLA and NSYPTZ**

### Installation of step slide ref. NSYDPLA●●●, with adapter plate ref. NSYPTZ●●●

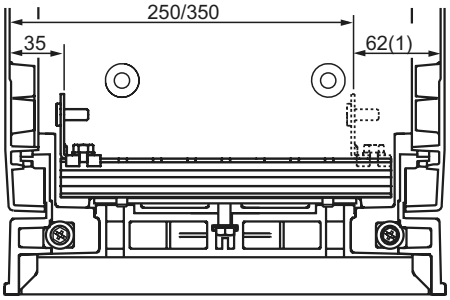

DB300654

(1) 57 mm with one transparent door.

# Mounting accessories
## Installation accessories

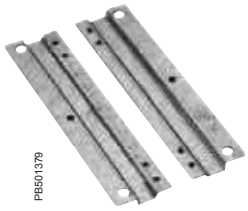


**NSYPTZ●●●**

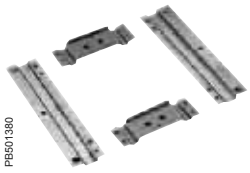


**NSYPTZ●●●2P**

## Adapter plates

- The enclosures with open bottom part (versions PLAZ and PLAZT) require a set of adapter plates for mounting:
– an internal door
– step slides
– modular chassis and 19" chassis
- Material: galvanised steel.
- Fixing on the bottom part of the enclosure by means of M8 inserts and screws (supplied).

| For enclosure | | Reference |
|---|---|---|
| Depth (mm) | N° of doors | |
| 320 | 1 | **NSYPTZ3** |
| 420 | 1 | **NSYPTZ4** |
| 320 | 2 | **NSYPTZ32P** |
| 420 | 2 | **NSYPTZ42P** |




## Additional support

- Set of 4 additional brackets, to be slid into the step slides, for the installation of an additional mounting plate.

| Description | Reference |
|---|---|
| Additional support | **NSYEDPLA** |




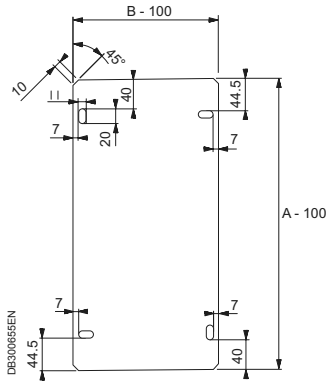


## Side mounting plates

- Polyester mounting plates fixed to the sides of the enclosure for additional installations. Installation on the M8 bosses by adding inserts, ref. **NSYTEX8**.

References by unit. Order by multiples of 2 units (2, 4, 6, etc.).

| For enclosure (mm) | | Reference |
|---|---|---|
| Height (A) | Depth (B) | |
| 500 | 320 | **NSYPMLA53** |
| 500 | 420 | **NSYPMLA54** |
| 750 | 320 | **NSYPMLA73** |
| 750 | 420 | **NSYPMLA74** |
| 1000 | 320 | **NSYPMLA103** |
| 1000 | 420 | **NSYPMLA104** |
| 1250 | 320 | **NSYPMLA123** |
| 1250 | 420 | **NSYPMLA124** |

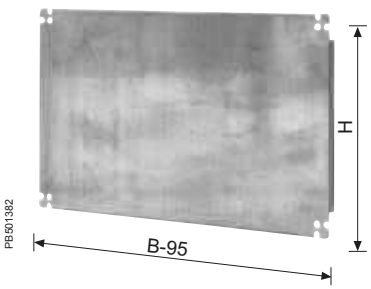


## Partial plain mounting plate

- Galvanised sheet-steel mounting plate.
- Direct fixing on the uprights, with the notched sliding nuts or pivoting nuts, see common accessories section.
- Maximum acceptable load: 150 kg/m$^2$.

| For enclosure | Mounting plate height H (mm) | Fixing centre-to-centre distance | | Reference |
|---|---|---|---|---|
| Width B (mm) | | Vertical | Horizontal | |
| 750 | 247 | 600 | 200 | **NSYSPMP2575** |
| 1000 | 247 | 850 | 200 | **NSYSPMP25100** |
| 1000 | 397 | 850 | 350 | **NSYSPMP40100** |

# Mounting accessories
## Installation accessories


PB501383

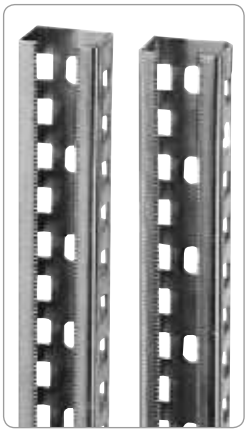
PB501384

### Technical uprights

- Supports for fixing rails, perforated grilles and plain partial mounting plates.
- Use the suitable fixings and accessories shown in the common accessory section.
- Material: steel, 2 mm thick.
- Batch of 2 pieces.
- Fixing at the rear on the M8 inserts or on the step slides.

| For enclosure Height (mm) | References | Dimensions |
|---|---|---|
| 750 | **NSYTVR7** | 625 |
| 1000 | **NSYTVR10** | 875 |
| 1250 | **NSYTVR125** | 1125 |
| 1500 | **NSYTVR15** | 1375 |

**Note:** Enclosures with widths of 1000 and 1250 allow the installation of 4 uprights to integrate 2 mounting plates of 500 mm or of 500 and 750 mm.

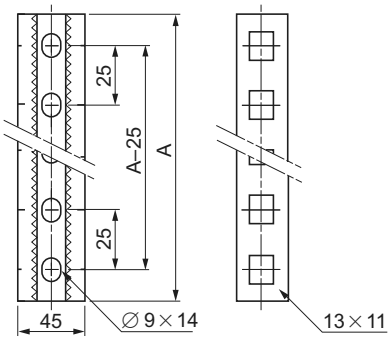


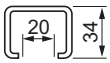

DB300656


PB500177

### Rails

- Symmetric or asymmetric DIN rails for mounting on the technical uprights, ref. **NSYTVR●●●**.
- Fixings and accessories: see common accessories.

References by unit. Order by multiples of 10 units (10, 20, 30, etc.).

| For installation in enclosures with width (B) (mm) | DIN rail references | |
|---|---|---|
| | Symmetrical 35 × 15 ⊔ | Asymmetrical ⊏ |
| 500 | **NSYCSPLA50** | **NSYCAPLA50** |
| 750 | **NSYCSPLA75** | **NSYCAPLA75** |
| 1000 (1) | **NSYCSPLA100** | **NSYCAPLA100** |

(1) Enclosures with a width of 1000 mm can accommodate 2 mounting plates with rail types **NSYCSPLA50** or **NSYCAPLA50**.


PB500187

### M8 inserts

- To be placed in the bosses moulded on the doors, uprights, rear panels and bottom and top parts, for fixing accessories and assorted devices.

References by unit. Order by multiples of 8 units (8, 16, 24, etc.).

| Description | Reference |
|---|---|
| M8 inserts | **NSYTEX8** |

# Mounting accessories
## Equipment support accessories




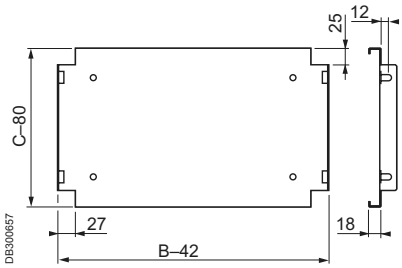


### Support plate

- Designed to support assorted equipment or simply to install a separation.
- It is installed directly on the bottom part of the enclosure.
- For the installation of one or several support plates, use 2 sets of 2 uprights suitable for the height (to be ordered separately). These uprights offer the option of adjusting the height with a step of 50 mm.
- Galvanised-steel material.
- Delivered with the fixings required for installation.
- In the 2-door enclosures, the installation of the plate or the uprights requires the prior installation of an intermediate support, ref. **NSYSBPLA**, presented below.

| For enclosure (mm) | | Max. load | Plate Reference |
|---|---|---|---|
| Depth (C) | Width (B) | | |
| 320 | 500 | 60 kg | **NSYBANPLA53** |
| 320 | 750 | 60 kg | **NSYBANPLA73** |
| 420 | 500 | 50 kg | **NSYBANPLA54** |
| 420 | 750 | 50 kg | **NSYBANPLA74** |




**NSYSPLA100**

| For enclosure Height (mm) | N° of adjustments | Upright Reference |
|---|---|---|
| 500 | - | **-** |
| 750 | 2 | 2 × **NSYSPLA75** |
| 1000 | 3 | 2 × **NSYSPLA100** |
| 1250 | 4 | 2 × **NSYSPLA125** |
| 1500 | 5 | 2 × **NSYSPLA150** |

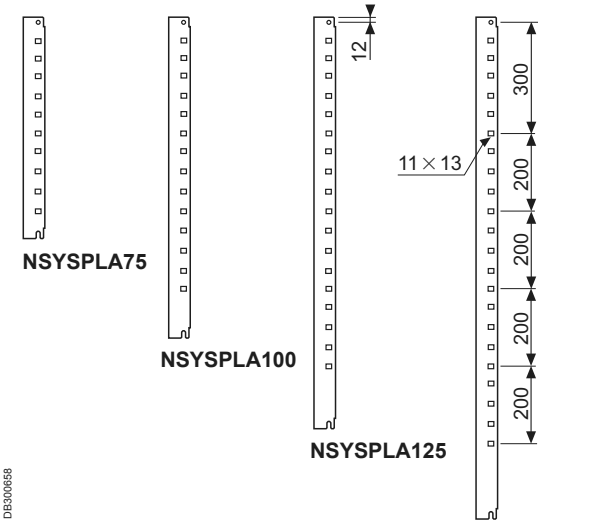


**NSYSPLA75**

**NSYSPLA100**

**NSYSPLA125**

**NSYSPLA150**

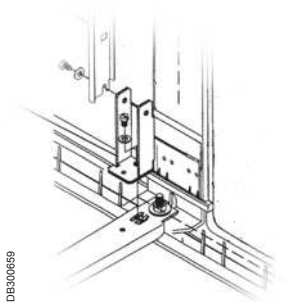


### Intermediate support in the 2-door enclosures

- Required accessory for installing support plates, ref. **NSYBANPLA●●●** or uprights, ref. **NSYSPLA●●●** in the 2-door enclosures.

| Description | Reference |
|---|---|
| Intermediate support | **NSYSBPLA** |

# Accessories



PB500191

## Renovation and anti-graffiti paint

- 2-component paint system, specially formulated for polyester enclosures. Renews enclosures and allows easy removal of graffiti.
- Paint composed of: base (80%) and hardener (20%).
- RAL 7032 grey.
- 2 references available:
  - 1 kg:
    - 800 g tin of base paint
    - 200 g tin of hardener
  - 5 kg:
    - 4 kg tin of base paint
    - 1 kg tin of hardener
- Coverage
  - 1 kg = 5 $m^2$
  - 5 kg = 25 $m^2$
- Solvent in 500 g bottles to be used as a paint thinner or to clean brushes.

| Description | Reference |
|---|---|
| Anti-graffiti paint 1 kg | **NSYAUPG1** |
| Anti-graffiti paint 5 kg | **NSYAUPG5** |
| Anti-graffiti paint solvent 500 g | **NSYAUPGS** |


PB501047

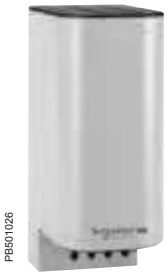
PB501026

## Discover our ClimaSys thermal management offer

- Ventilation accessories.
- Filters.
- Regulation accessories.

# Power distribution accessories
## Modular distribution accessories


PB501387

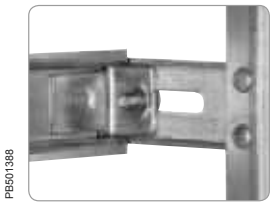
PB501388

Details of the depth adjustment.

### Modular distribution chassis

- Chassis for modular switchgear, installed directly in the sealed enclosures (PLA version). For installation in enclosures with open bottom part (PLAZ version) it is necessary to use a set of adapter plates (ref. **NSYPTZ●●●**).
- Chassis made up of cover plates, made from self-extinguishing insulating material, RAL 7032 grey, on a rigid galvanised-steel structure.
- Quick installation without fixings.
- Distance between rail and front panel with adjustable depth from 40 to 85 mm.
- System for identifying electrical circuits supplied.
- Neutral/earth strip: $2 \times 16$ mm$^2$ + $5 \times 6$ mm$^2$ included in the standard offer.
- Incompatibility with: cable-entry plate, internal door, door switch and door retainer (ref. **NSYRETPLAU**).

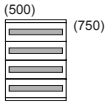

**NSYDLP76**

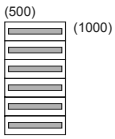

**NSYDLP114**

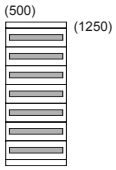

**NSYDLP133**

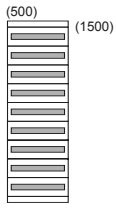

**NSYDLP171**

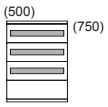

**NSYDLP57**

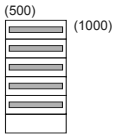

**NSYDLP95**

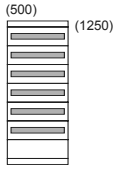

**NSYDLP114P**

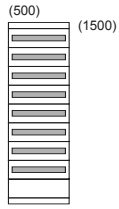

**NSYDLP152**

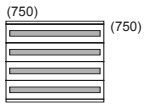

**NSYDLP132**

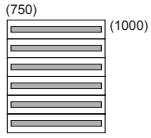

**NSYDLP198**

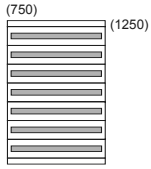

**NSYDLP231**

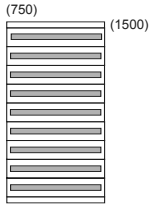

**NSYDLP297**

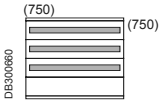

DB300860
**NSYDLP99**

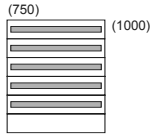

**NSYDLP165**

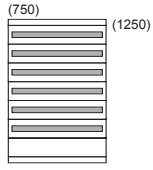

**NSYDLP198P**

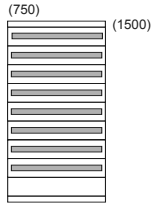

**NSYDLP264**

# Power distribution accessories
## Modular distribution accessories

| For enclosures (mm) | | N° of doors | Reference | Row distribution | | | |
|---|---|---|---|---|---|---|---|
| | | | | N° of rows | Rows for module | | Number of plates |
| Height | Width | | | | Number | Number of 18-mm modules | |
| 750 | 500 | 1 | **NSYDLP76** | 4 | 4 | 76 | - |
| 750 | 500 | 1 | **NSYDLP57** | 4 | 3 | 57 | 1 |
| 750 | 750 | 1 | **NSYDLP132** | 4 | 4 | 132 | - |
| 750 | 750 | 1 | **NSYDLP99** | 4 | 3 | 99 | 1 |
| 750 | 1000 | 2 | 2 × **NSYDLP76** | 4 + 4 | 4 + 4 | 152 | - |
| 750 | 1000 | 2 | 2 × **NSYDLP57** | 4 + 4 | 3 + 3 | 114 | 1 + 1 |
| 750 | 1250 | 2 | **NSYDLP76** + **NSYDLP132** | 4 + 4 | 4 + 4 | 208 | - |
| 750 | 1250 | 2 | **NSYDLP57** + **NSYDLP99** | 4 + 4 | 3 + 3 | 156 | 1 + 1 |
| 1000 | 500 | 1 | **NSYDLP114** | 6 | 6 | 114 | - |
| 1000 | 500 | 1 | **NSYDLP95** | 6 | 5 | 95 | 1 |
| 1000 | 750 | 1 | **NSYDLP198** | 6 | 6 | 198 | - |
| 1000 | 750 | 1 | **NSYDLP165** | 6 | 5 | 165 | 1 |
| 1000 | 1000 | 2 | 2 × **NSYDLP114** | 6 + 6 | 6 + 6 | 228 | - |
| 1000 | 1000 | 2 | 2 × **NSYDLP95** | 6 + 6 | 5 + 5 | 190 | 1 + 1 |
| 1000 | 1250 | 2 | **NSYDLP114** + **NSYDLP198** | 6 + 6 | 6 + 6 | 312 | - |
| 1000 | 1250 | 2 | **NSYDLP95** + **NSYDLP165** | 6 + 6 | 5 + 5 | 260 | 1 + 1 |
| 1250 | 500 | 1 | **NSYDLP133** | 7 | 7 | 133 | - |
| 1250 | 500 | 1 | **NSYDLP114P** | 7 | 6 | 114 | 1 |
| 1250 | 750 | 1 | **NSYDLP231** | 7 | 7 | 231 | - |
| 1250 | 750 | 1 | **NSYDLP198P** | 7 | 6 | 198 | 1 |
| 1250 | 1000 | 2 | 2 × **NSYDLP133** | 7 + 7 | 7 + 7 | 266 | - |
| 1250 | 1000 | 2 | 2 × **NSYDLP114P** | 7 + 7 | 6 + 6 | 228 | 1 + 1 |
| 1250 | 1250 | 2 | **NSYDLP133** + **NSYDLP231** | 7 + 7 | 7 + 7 | 364 | - |
| 1250 | 1250 | 2 | **NSYDLP114P** + **NSYDLP198P** | 7 + 7 | 6 + 6 | 312 | 1 + 1 |
| 1500 | 500 | 1 | **NSYDLP171** | 9 | 9 | 171 | - |
| 1500 | 500 | 1 | **NSYDLP152** | 9 | 8 | 152 | 1 |
| 1500 | 750 | 1 | **NSYDLP297** | 9 | 9 | 297 | - |
| 1500 | 750 | 1 | **NSYDLP264** | 9 | 8 | 264 | 1 |
| 1500 | 1000 | 2 | 2 × **NSYDLP171** | 9 + 9 | 9 + 9 | 342 | - |
| 1500 | 1000 | 2 | 2 × **NSYDLP152** | 9 + 9 | 8 + 8 | 304 | - |
| 1500 | 1250 | 2 | **NSYDLP171** + **NSYDLP297** | 9 + 9 | 9 + 9 | 468 | 1 + 1 |
| 1500 | 1250 | 2 | **NSYDLP152** + **NSYDLP264** | 9 + 9 | 8 + 8 | 416 | 1 + 1 |

# Power distribution accessories
## Modular distribution accessories


PB501389

Detail from front-panel mounting.

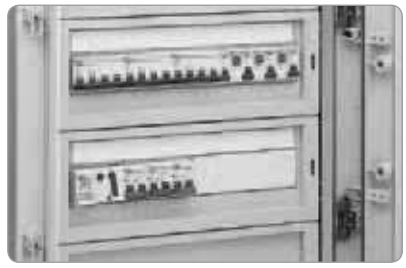
PB501390

Detail from the circuit-marking system.

## Dimensions

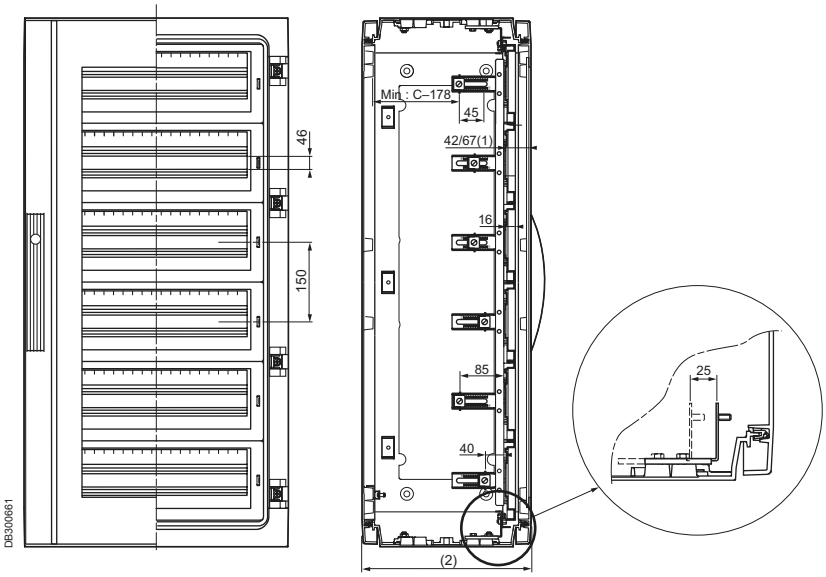


(1) Dimensions of 42 or 67 mm or a pitch of 25 mm, according to the M8 boss chosen for the installation. See details in the enlarged image on the right. In the enclosures with glazed doors, the 2 dimensions are reduced by 5 mm.
(2) C = Depth of the enclosure.

## Plain cover plate


PB501391

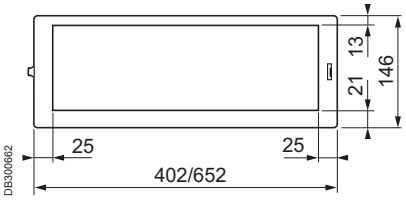


- Self-extinguishing insulating material, RAL 7032 grey, for non-modular switchgear protection.
- Nominal height: 150 mm.
- Order by multiples of 2 (2, 4, 6...).

| For enclosure width (mm) | Dimensions (mm) | | Reference |
|---|---|---|---|
| | Height | Width | |
| 500 | 146 | 402 | **NSYCTL500DLP** |
| 750 | 146 | 652 | **NSYCTL750DLP** |

## Plain mounting plate


PB501392

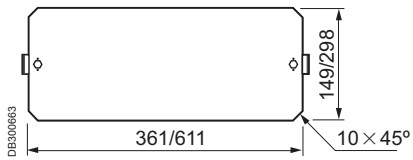


- Plate for fixing non-modular devices.
- Material: galvanised steel, 2 mm thick.
- Depth-adjustable fixing on the supports from 40 to 85 mm.
- Nominal height: 150 mm or 300 mm.
- Order by multiples of 2 (2, 4, 6...).

| For enclosure width (mm) | Dimensions (mm) | | Reference |
|---|---|---|---|
| | Height | Width | |
| 500 | 149 | 361 | **NSYPMP500DLP** |
| 750 | 149 | 611 | **NSYPMP750DLP** |
| 500 | 298 | 361 | **NSYPMP5002DLP** |
| 750 | 298 | 611 | **NSYPMP7502DLP** |

# 19" accessories

## 19” chassis

- Very sturdy 19” metal chassis, designed for installation in enclosures with a width of 750 and 1250 mm. In the 1250 mm enclosure, the chassis is installed in the 750 mm part with an intermediate support, ref. **NSYSBPLA**.
- These chassis are available in 2 versions: fixed and swing.
- These chassis can be used as partial mounting plates in enclosures with higher-than-nominal height.
- Incompatible with the internal doors and the step slides.

PB500184



Enclosure with 19” fixed chassis.

## 19” fixed chassis

- Fixed chassis made up of 2 uprights with fixings.
- For heights from 750 to 1500 mm, the installation requires ordering 1 batch of 2 matching uprights. If a chassis is installed in an enclosure with a greater height, it is necessary to use the suitable uprights for the size of the enclosure.
- Material: sheet steel, thickness 20 / 10 mm, RAL 7032 grey epoxy-polyester paint.
- Maximum load: 3 kg per U.

| For enclosure (mm) | | Number of U | Reference | |
|---|---|---|---|---|
| Height | Width | | 19” fixed chassis | Batch of 2 uprights |
| 500 | 750 | 8 | **NSYBRF8PLA** | - |
| 750 | 750 | 12 | **NSYBRF12PLA** | **NSYSPLA75** |
| 1000 | 750 | 17 | **NSYBRF17PLA** | **NSYSPLA100** |
| 1250 | 750 | 21 | **NSYBRF21PLA** | **NSYSPLA125** |
| 1500 | 750 | 26 | **NSYBRF26PLA** | **NSYSPLA150** |

PB500185



Enclosure with 19” swing chassis.

## 19” swing chassis

- Swing chassis opening to 120° with 5 mm double-bar key lock.
- For heights from 750 to 1500 mm, the installation requires ordering 1 batch of 2 matching uprights. If a chassis is installed in an enclosure with a greater height, it is necessary to use the suitable uprights for the size of the enclosure.
- Material: sheet steel, thickness 20 / 10 mm, RAL 7032 grey epoxy-polyester paint.
- Maximum load: 3 kg per U.

| For enclosure (mm) | | Number of U | Reference | |
|---|---|---|---|---|
| Height | Width | | 19” swing chassis | Batch of 2 uprights |
| 500 | 750 | 7 | **NSYBRP7PLA** | - |
| 750 | 750 | 11 | **NSYBRP11PLA** | **NSYSPLA75** |
| 1000 | 750 | 16 | **NSYBRP16PLA** | **NSYSPLA100** |
| 1250 | 750 | 20 | **NSYBRP20PLA** | **NSYSPLA125** |
| 1500 | 750 | 25 | **NSYBRP25PLA** | **NSYSPLA150** |

# 19" accessories

## Dimensions

### 19” fixed chassis

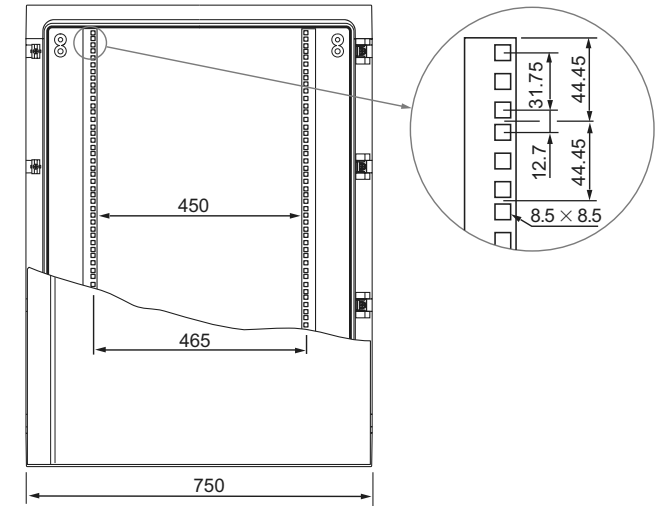


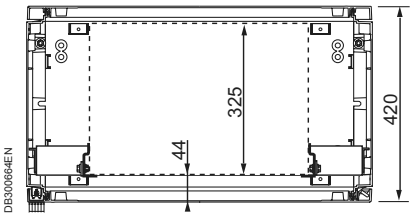


### 19” swing chassis

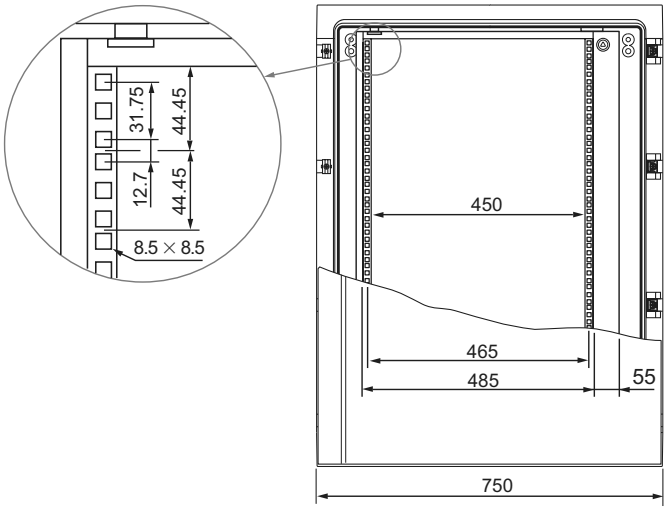


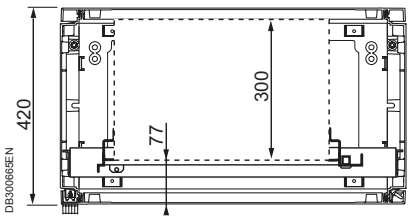


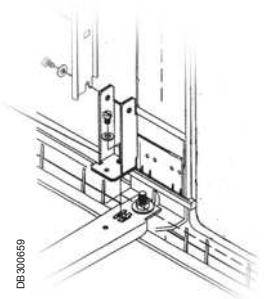


## Intermediate support in the 2-door enclosures

- Accessory required for installing uprights, ref. **NSYSPLA●●●**, in the 2-door enclosures.

| Description | Reference |
|---|---|
| Intermediate support | **NSYSBPLA** |

# PLA customised solution
## Configured and specific
## Solution guide


PB501393

### Thalassa PLA configured or specific polyester floor-standing enclosure

- The configured offer anticipates the most common needs and allows to optimise delivery times. The configuration sheet on the next page defines the limits of this offer and helps you design this solution.
- The specific offer allows the greatest variety of customisations. A help to define a specific need is presented on page **7**.
- The advantages and examples of customised solutions are presented on pages **5** and **6**.

| Part | Service | Configured | Specific |
|---|---|---|---|
| | Special design or construction (1) | | ☑ |
| | Minimum amount | ☑ | ☑ |
| | Maximum amount | ☑ | |
| **Body and door** | Special colour of the material | | ☑ |
| | Paint colour | | ☑ |
| | Anti-graffiti paint | | ☑ |
| **Body** | Horizontal coupling | | ☑ |
| | Vertical coupling | | ☑ |
| | Depthwise coupling | ☑ | ☑ |
| | Body machining on all sides (2) | ☑ | ☑ |
| | Mounting (or supply) of standard accessories of the configured offer (3) | ☑ | ☑ |
| | Mounting (or supply) of other standard PLA accessories | | ☑ |
| | Mounting (or supply) of other standard common accessories | | ☑ |
| **Door** | Rear door installation | | ☑ |
| | Machining in the door (2) | ☑ | ☑ |
| | Central upright fixed to left door | ☑ | |
| | Special glass (dimensions) or window | | ☑ |
| | Standard catalogue locks (3) | ☑ | ☑ |
| | Special locks not included in the catalogue | | To be studied |
| | Mounting (or supply) of standard accessories of the configured offer (3) | ☑ | ☑ |
| | Mounting (or supply) of other standard PLA accessories | | ☑ |
| | Mounting (or supply) of other standard common accessories | | ☑ |
| **Mounting plates and rails** | Standard mounting plates | ☑ | ☑ |
| | Special mounting plates | | To be studied |
| | Special machining of mounting plates | | ☑ |
| **Cable-entry plates and accessories** | Installation of common cable-entry plates and/or cable entries | | ☑ |
| | Installation of common cable-management accessories | | ☑ |
| **Thermal** | Installation of airing devices, fans (3) | ☑ | ☑ |
| **Diverse** | Machining of the internal door and the cable-gland plates | | ☑ |
| | Special installation accessories: plinths, external mounting plates, supports, etc. | | To be studied |
| | Accessories not included in the Universal Enclosure offer | | To be studied |
| | Special marking | | ☑ |
| | Special packaging | | ☑ |

(1) Mounting or combination of doors (plain, anti-posting, glazed) and mounting of rear doors with the configured deadline, for the configured amounts.
(2) See areas in DXF diagrams.
(3) The accessories included or installed in the configured offer are shown in the configuration sheet on the next page.

# PLA configured solution
## Configuration sheet

Configured



PB501393

**Document to be sent to your sales office by e-mail or fax**

**YOUR CONTACT DETAILS**

Full name: _____

Company: _____

Address: _____

Tel.: _____ Fax: _____

E-mail: _____

| | | | | | | | | | |
|---|---|---|---|---|---|---|---|---|---|
| QUANTITY OF ENCLOSURES | ..... | | | | | | | | |
| GLAZED DOOR ☐ | PLAIN DOOR ☐ | | | | | | | | |
| ANTI-POSTING RIBBED DOOR ☐ | | | | | | | | | |
| HINGES ON THE LEFT ☐ | | | | | | | | | |
| For 1-door floor-standing enclosure | | | | | | | | | |
| CENTRAL UPRIGHT FIXED TO LEFT DOOR ☐ | | | | | | | | | |
| CHOICE OF VERSION | | | | | | | | | |

| CATALOGUE DIMENSIONS (mm) | OR | REFERENCE | | | | | | | | |
|---|---|---|---|---|---|---|---|---|---|---|
| HEIGHT | 500 ☐ | 750 ☐ | 1000 ☐ | 1250 ☐ | 1500 ☐ | | | | | |
| WIDTH | 500 ☐ | 750 ☐ | 1000 ☐ | 1250 ☐ | | | | | | |
| DEPTH | 320 ☐ | 420 ☐ | | | | | | | | |
| ENHANCED DEPTH (for PLA and PLAZ versions) | 575 ☐ | 775 ☐ | | | | | | | | |
| PLA: COMPLETELY SEALED, IP 65 ☐ | | | | | | | | | | |
| PLAT: VENTILATED CANOPY IP 44 ☐ | | | | | | | | | | |
| PLAZ: PLINTH-TYPE OPEN BOTTOM PART, 60 mm, IP 54 ☐ | | | | | | | | | | |
| PLAZT: VENTILATED CANOPY AND PLINTH-TYPE OPEN BOTTOM PART IP 44 ☐ | | | | | | | | | | |

## Choice of standard configured accessories

*Also tick the red box* **m** *for accessories installed in the factory.*

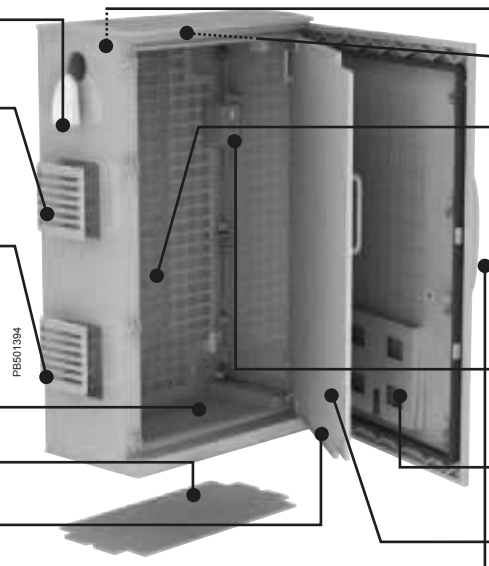

PB501394

AIRING DEVICE ☐ m ☐
REF. NSYCAG33LP

OUTLET GRILLE m ☐
REF. NSYCAG125LPF ☐
(RAL 7035)

FAN m ☐
REF. NSYCVF85M230PF ☐
(RAL 7035)

STEP SLIDES ☐ m ☐

CABLE-ENTRY PLATE ☐ m ☐

DOOR RETAINER (installed)
90° (FOR VERSIONS PLA, PLAZ, PLAT) ☐
2 POSITIONS (90° AND 120°) ☐

M8 INSERTS (SET OF 8) ☐

DOOR SWITCH ☐ m ☐

KIT IP54 ☐ m ☐

REAR MOUNTING PLATE
PLAIN ☐ m ☐
TELEQUICK ☐ m ☐
BAKELITE ☐ m ☐
POLYESTER ☐ m ☐
MODULAR CHASSIS ☐ m ☐
19" FIXED CHASSIS ☐ m ☐

☐ THERMOSTAT
REF. NSYCCOTHO

☐ DOCUMENT POCKET

☐ INTERNAL DOOR (installed)

☐ LOCK MODIFICATION
DETAILS BELOW * ☐
PADLOCKING ☐

* Eventual incompatibilities between accessories can't be considered in configurator sheet.

# PLA configured solution
## Configuration sheet

Configured



PB501393

## *Modification of the lock

| STANDARD PLA VERSION: ESCUTCHEON AND DOUBLE-BAR INSERT | PLA VERSION: OPTION WITH HANDLE AND DOUBLE-BAR INSERT ☐ | PLAT, PLAZ, PLAZT VERSIONS (STANDARD): HANDLE AND DOUBLE-BAR INSERT |
|---|---|---|

| CHANGE FOR | |
|---|---|
| 7-mm SQUARE | ☐ |
| 8-mm SQUARE | ☐ |
| 8-mm TRIANGULAR | ☐ |

| INSERT CHANGE | |
|---|---|
| CONTROL BY BUTTON | ☐ |
| 8-mm TRIANGULAR | ☐ |
| 405 LOCK | ☐ |
| 1242 LOCK | ☐ |
| ADAPTOR FOR DIN LOCK | ☐ |

## > Machining

For a quick calculation, please let us know the total number of machining operations required:

| | |
|---|---|
| ON THE REAR | |
| ON THE SIDES (TOP/BOTTOM/SIDE) | |
| FOR GRILLES, FANS AND AIRING DEVICES | |
| OTHER MACHINING | |
| ON THE DOOR | |

NOTE: Every drill hole or cut-out is a machining operation. The machining areas are specified in the DXF diagrams.

Download the configuration sheets and the DXF diagrams from our website.
Send them back to your sales office with your modifications.
Mandatory when ordering to guarantee configured offer delivery times.

Specific

Other needs, other constraints? Contact us.
A specific offer will meet all your requirements. A help to define a specific need is presented on page **7**.

Advantages of our customised offer and examples of implementations, see pages **5** and **6**.

# Make the most of your energy

www.schneider-electric.com

**Schneider Electric Industries SAS**

35, rue Joseph Monier
CS 30323
F- 92506 Rueil Malmaison Cedex

RCS Nanterre 954 503 439
Capital social 896 313 776 €
www.schneider-electric.com

As standards, specifications and designs change from time to time, please ask for confirmation of the information given in this publication.

*Printed on ecological paper*

Publication: Schneider Electric
Design-Layout: Tecfa

UE11MK12en

10-2011

© 2011 - Schneider Electric - All rights reserved