RA
switch disconnectors
RAB
switch disconnectors fuses

RA switch disconnectors and RAB switch disconnectors fuses are designed for distribution of electricity, making and breaking currents and protection of electrical equipment against shortcircuits and overloads with industrial fuse links.



APATOR



RA100P3/OHB
+cable terminal
shrouds

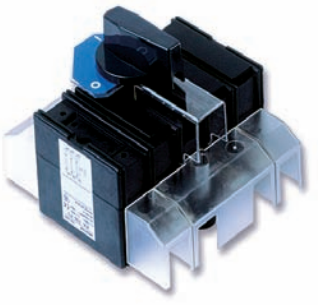

RA100P3/R
+cable terminal
shrouds



RAB1P3/OHY
+fuse link shroud



RAB2P3/OHY
+fuse link shroud

R type series is divided into two groups:

- RA switch disconnectors
  - 3-pole with optional neutral (N) 4th pole
    - RA100 - 4th pole switchable
- RAB switch disconnectors fuses
  - 3-pole with optional neutral (N) 4th pole
    - RAB000 - 4th pole switchable

GENERAL INFORMATION

- safety of service and easy installation
- self-extinguishing thermoplastics (V0 flammability class)
- silver plated parts of current circuits
- self-tightening and self-cleaning contacts
- high electrical and mechanical endurance
- high short-circuit making and breaking capacity
- double, safe clearance between open contacts
- complete isolation of fuse links in „off" position
- manually operated drive (spring powered)
- wide range of accesories

APPLICATIONS

- main switch disconnector in distribution boards
- switch disconnector
- switch disconnector for motor control and protection

OPERATING CONDITIONS

- to be installed in the room free of any dust, aggressive or explosive gases
- for moderate, marine and tropical climate
- ambient temperature from -25°C to +55°C
- altitude up to 2000 meters above sea level
- outdoor – in cabinets with protection degree > IP 34

CONSTRUCTION AND OPERATION

RA switch disconnectors and RAB switch disconnectors fuses consists of following parts:

- bottom part of the body with fitted current circuits (stationary contacts, cable terminals)
- top part of the body with fitted contacts (RA) or spring loaded contacts for fuse link blades (RAB)
- traverse with moving contacts
- manually operated drive (spring powered)

Current circuit of each phase has four cleareances between contacts in switched off position(double cleareance for each pair of contacts, two pairs of contacts for each phase phase) ensuring required isolating distance and safe replacement of fuse links in RAB switch disconnectors fuses. Manually triggered, spring powered drive delivers rapid switching. RA switch disconnectors and RAB switch disconnectors fuses can be equipped with two types of handles:

- R type - installed on disconnector's shaft
- OHB, OHY type - for installation on distribution board's door

Handle position indicates disconnector's state - switched on or switched off. OHB and OHY handles are designed for locking by up to three padlocks in OFF („0") position. Handles are available in colours black and yellow-red. Wide range of accesories is available for RA switch disconnectors and RAB switch disconnectors fuses like additional shafts, shaft joints, auxiliary switches, cable terminal shrouds, fuse link shrouds, etc.

INSTALLATION

RA switch disconnectors and RAB switch disconnectors fuses are designed for operation in horizontal or vertical position with permissible deviation of 30 deg. in any direction. RA switch disconnectors and RAB switch disconnectors fuses should be mounted to support structure with screws with spring washers.

Table 109. SCREW TERMINALS TIGHTENING TORQUE

Screw	M6	M8	M10	M12
Tightening torque	7 Nm	14 Nm	24 Nm	38 Nm

Table 110. RA TECHNICAL DATA

Article		Unit	RA 100	RA 160	RA 250	RA 400	RA 630	RA 1250
Parameters			Value					
Rated thermal current	I_{th}	A	100	160	250	400	630	1250
Rated insulation voltage	U_i	V	1000					
Rated impulse withstand voltage	U_{imp}	kV	8					
Rated frequency		Hz	50 ÷ 60					
Rated switching current for AC 22A U_e = 690 V	I_e	A	100	125	125	250	400	-
Rated switching current for AC 22B U_e = 690 V	I_e	A	-	-	-	400	630	-
Rated switching current for AC 22A U_e = 500 V	I_e	A	-	-	-	-	-	1250
Rated switching current for AC 22B U_e = 415 V	I_e	A	-	-	250	-	-	-
Rated switching current for AC 23A U_e = 500 V	I_e	A		160	160	-	-	-
Rated switching current for AC 23A U_e = 690 V	I_e	A	40	-	-	-	-	-
Rated short-circuit making capacity	I_{cm}	kA_{max}	7	9	20	25	35	100
Rated short-time withstand current 1s	I_{cw}	kA	2,5	8	8	15	15	50
Mechanical durability		number of cycles	10000	8000	8000	5000	5000	3000
Electrical durability at utilization category AC22A			1500	1000	1000	1000	1000	500
Duty		-	Continuous duty					
Protection degree IP		-	IP 00					
Weight		kg	0,95	1,7	1,85	3,3	4,3	12,5
Busbar cross-section		mm^2	15 x 2	20 x 4	25 x 4	2 x 25 x 4	2 x 30 x 5	60 x 10
Cable conductor cross-section		mm^2	35	95	120	240	2 x 185	-

Table 111. RA SWITCH DISCONNECTORS WITH STANDARD CABLE TERMINALS

Type	I_n	Number of poles	Accesories *	Article	Article No.	
RA 100	100 A	3	-	RA 100 P3	on request *	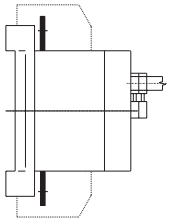
		3 + N	-	RA 100 P3 N	63-823064-091	
		4	-	RA 100 P4	on request *	
		3	R1	RA 100 P3/R	on request *	
		3 + N	R1	RA 100 P3 N/R	63-823064-211	
		4	R1	RA 100 P4/R	on request *	
RA 160	160 A	3	-	RA 160 P3	63-822982-011	
		3 + N	-	RA 160 P3 N	on request *	
		3	R1	RA 160 P3/R	63-822982-051	
		3 + N	R1	RA 160 P3 N/R	on request *	
RA 250	250 A	3	-	RA 250 P3	63-822982-021	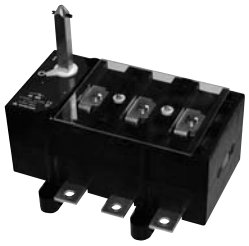
		3 + N	-	RA 250 P3 N	on request *	
		3	R1	RA 250 P3/R	63-822982-061	
		3 + N	R1	RA 250 P3 N/R	on request *	
RA 400	400 A	3	-	RA 400 P3	63-811593-011	
		3 + N	-	RA 400 P3 N	on request *	
		3	R1	RA 400 P3/R	63-811593-051	RA 100 P3
		3 + N	R1	RA 400 P3 N/R	on request *	
RA 630	630 A	3	-	RA 630 P3	63-811593-021	
		3 + N	-	RA 630 P3 N	on request *	
		3	R1	RA 630 P3/R	63-811593-061	
		3 + N	R1	RA 630 P3 N/R	on request *	
RA 1250	1250 A	3	-	RA 1250 P3	63-811601-011	
		3 + N	-	RA 1250 P3 N	63-811601-021	
		3	R1	RA 1250 P3/R	63-811601-031	
		3 + N	R1	RA 1250 P3 N/R	63-811601-041	RA 100 P3/R

*R1 - handle mounted on shaft
CAUTION! N - 4th pole unswitchable, switchable 4th pole available only for RA100 type switch disconnectors

Table 112. RA SWITCH DISCONNECTORS WITH „A" TYPE CABLE TERMINALS

Type	I_n	Number of poles	Accesories *	Article	Article No.	
RA 100	100 A	3	-	RA 100 P3 A	63-823064-021	
		3 + N	-	RA 100 P3 NA	63-823064-101	
		4	-	RA 100 P4 A	63-823064-061	A
		3	R1	RA 100 P3 A/R	63-823064-141	
		3 + N	R1	RA 100 P3 NA/R	63-823064-221	
		4	R1	RA 100 P4 A/R	63-823064-181	
RA 160	160 A	3	-	RA 160 P3 A	63-823165-011	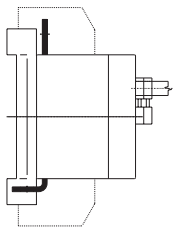
		3 + N	-	RA 160 P3 NA	63-823165-021	
		3	R1	RA 160 P3 A/R	63-823165-131	
		3 + N	R1	RA 160 P3 NA/R	63-823165-141	
RA 250	250 A	3	-	RA 250 P3 A	63-823165-031	
		3 + N	-	RA 250 P3 NA	63-823165-041	
		3	R1	RA 250 P3 A/R	63-823165-151	
		3 + N	R1	RA 250 P3 NA/R	63-823165-161	
RA 400	400 A	3	-	RA 400 P3 A	63-811618-011	
		3 + N	-	RA 400 P3 NA	63-811618-031	
		3	R1	RA 400 P3 A/R	63-811618-131	
		3 + N	R1	RA 400 P3 NA/R	63-811618-151	
RA 630	630 A	3	-	RA 630 P3 A	63-811618-021	
		3 + N	-	RA 630 P3 NA	63-811618-041	
		3	R1	RA 630 P3 A/R	63-811618-141	
		3 + N	R1	RA 630 P3 NA/R	63-811618-161	

*R1 - handle mounted on shaft

Table 113. RA SWITCH DISCONNECTORS WITH „B" TYPE CABLE TERMINALS

Type	I_n	Number of poles	Accesories *	Article	Article No.	
RA 100	100 A	3	-	RA 100 P3 B	63-823064-031	B
		3 + N	-	RA 100 P3 NB	63-823064-111	
		4	-	RA 100 P4 B	63-826064-071	
		3	R1	RA 100 P3 B/R	63-823064-151	
		3 + N	R1	RA 100 P3 NB/R	63-823064-231	
		4	R1	RA 100 P4 B/R	63-823064-191	
RA 160	160 A	3	-	RA 160 P3 B	63-823165-051	
		3 + N	-	RA 160 P3 NB	63-823165-061	
		3	R1	RA 160 P3 B/R	63-823165-171	
		3 + N	R1	RA 160 P3 NB/R	63-823165-181	
RA 250	250 A	3	-	RA 250 P3 B	63-823165-071	
		3 + N	-	RA 250 P3 NB	63-823165-081	
		3	R1	RA 250 P3 B/R	63-823165-191	
		3 + N	R1	RA 250 P3 NB/R	63-823165-201	
RA 400	400 A	3	-	RA 400 P3 B	63-811618-051	
		3 + N	-	RA 400 P3 NB	63-811618-071	
		3	R1	RA 400 P3 B/R	63-811618-171	
		3 + N	R1	RA 400 P3 NB/R	63-811618-191	
RA 630	630 A	3	-	RA 630 P3 B	63-811618-061	
		3 + N	-	RA 630 P3 NB	63-811618-081	
		3	R1	RA 630 P3 B/R	63-811618-181	
		3 + N	R1	RA 630 P3 NB/R	63-811618-201	

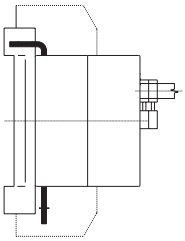

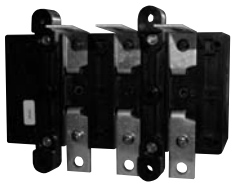

*R1 - handle mounted on shaft

Table 114. RA SWITCH DISCONNECTORS WITH „C" TYPE CABLE TERMINALS

Type	I_n	Number of poles	Accesories *	Article	Article No.	
RA 100	100 A	3	-	RA 100 P3 C	63-823064-041	C
		3 + N	-	RA 100 P3 NC	63-823064-121	
		4	-	RA 100 P4 C	63-823064-081	
		3	R1	RA 100 P3 C/R	63-823064-161	
		3 + N	R1	RA 100 P3 NC/R	63-823064-241	
		4	R1	RA 100 P4 C/R	63-823064-201	
RA 160	160 A	3	-	RA 160 P3 C	63-823165-091	
		3 + N	-	RA 160 P3 NC	63-823165-101	
		3	R1	RA 160 P3 C/R	63-823165-211	
		3 + N	R1	RA 160 P3 NC/R	63-823165-221	
RA 250	250 A	3	-	RA 250 P3 C	63-823165-111	
		3 + N	-	RA 250 P3 NC	63-823165-121	
		3	R1	RA 250 P3 C/R	63-823165-231	
		3 + N	R1	RA 250 P3 NC/R	63-823165-241	
RA 400	400 A	3	-	RA 400 P3 C	63-811618-091	
		3 + N	-	RA 400 P3 NC	63-811618-111	
		3	R1	RA 400 P3 C/R	63-811618-211	
		3 + N	R1	RA 400 P3 NC/R	63-811618-231	
RA 630	630 A	3	-	RA 630 P3 C	63-811618-101	
		3 + N	-	RA 630 P3 NC	63-811618-121	
		3	R1	RA 630 P3 C/R	63-811618-221	
		3 + N	R1	RA 630 P3 NC/R	63-811618-241	

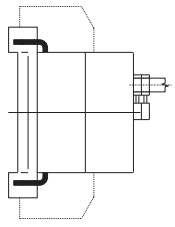

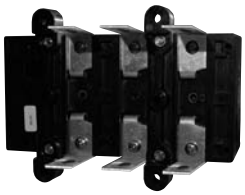

*R1 - handle mounted on shaft

Dimensions of RA100

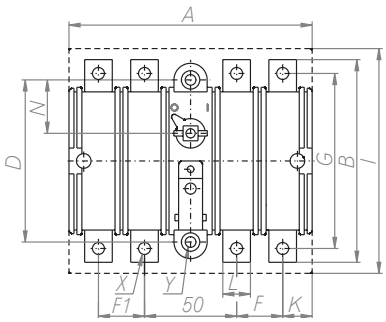

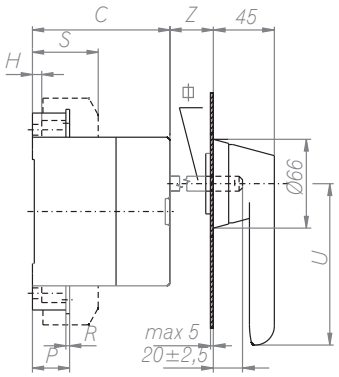

Version with handle mounted on distribution board's door

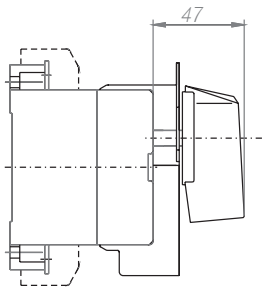

Version with knob mounted on shaft

Dimension	A	B	C	D	E	F	F1	G	H	I	K	L	L1	M	N	O	P	R	S	U	X	Y	Z	⌀	W
RA 100	132	110	74	88	–	25	25	95	5	150	16	15	–	–	29	–	20	2	50	65	6,5	5,8	48	8	–

Dimensions of RA 160, RA 250, RA 400, RA 630

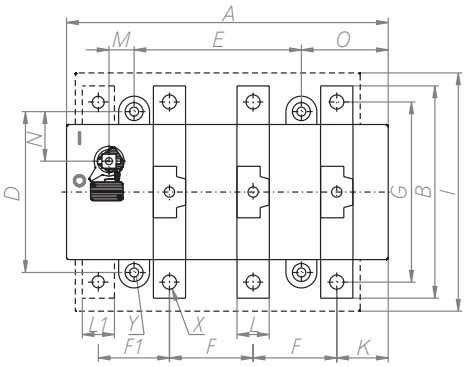

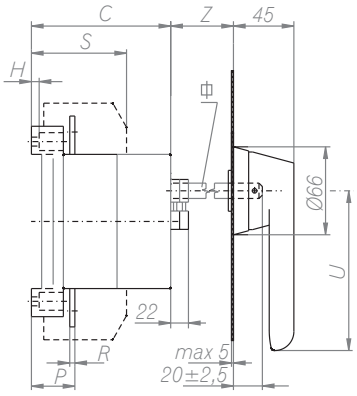

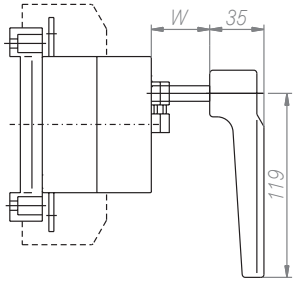

Dimension	A	B	C	D	E	F	F1	G	H	I	K	L	L1	M	N	O	P	R	S	U	X	Y	Z	⌀	W
RA 160	176	132	88	110	84	42	42	115	5	170	30	20	20	16	36	51	26	3	61	95	8,8	5,8	43	10	32
RA 250																		3,5							
RA 400	250	174	109	125	130	65	55	149	8	225	40	25	25	20	38,5	67,5	34	4	86	125	11	7	47	12	32
RA 630												25					30	5							







CABLE TERMINALS OF TYPE A, B, C

A

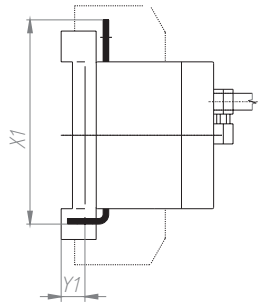

B

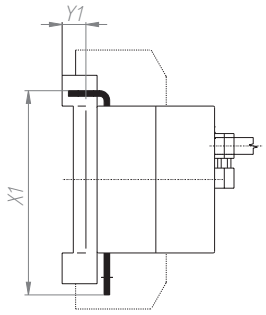

C

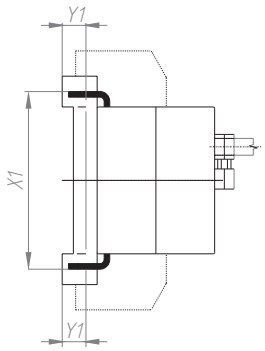

Dimensions of cable terminals	RA 160			RA 250			RA 400			RA 630		
	A	B	C	A	B	C	A	B	C	A	B	C
X1	111	111	90	111	111	90	140,5	140,5	116	146	146	127
Y1	8,5	8,5	8,5	8,5	8,5	8,5	13	13	13	13	13	13

Dimensions of RA1250

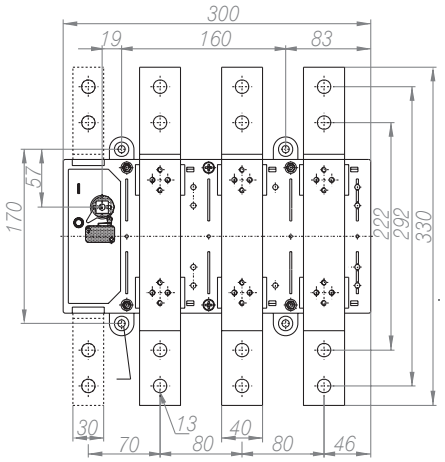

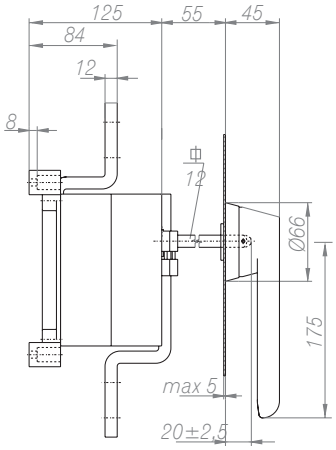

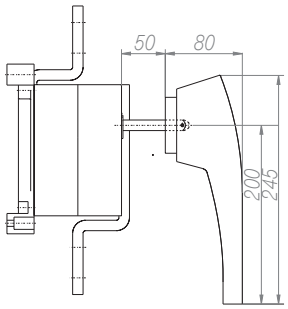



For installation behind assembly panel

RA 160/250

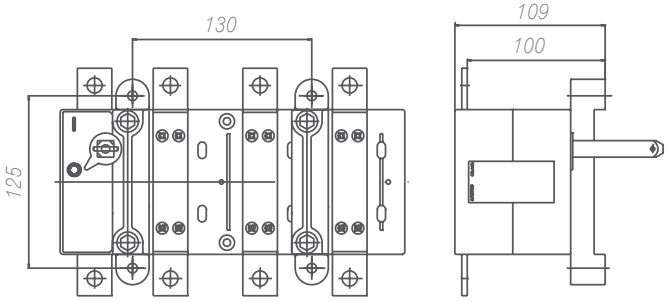

RA 400/630

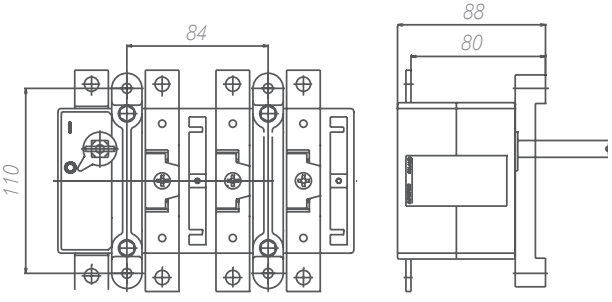

CAUTION!
lengthening of shaft is possible by adding second shaft, connected by shaft link (see Accesories)

CHANGE-OVER SWITCHES I-0-II

I - 0 - II	Poles	I_n	Article No. of RA switch	Article No. of coupling mechanism handle mounted on shaft	Article No. of coupling mechanism handle OHB mounted on distribution board's door	
160	3	160 A	2 x RA 160 P3 (63-822982-011)	+63-839949-011	+63-839949-021	
250	3	250 A	2 x RA 250 P3 (63-822982-021)	+63-839949-011	+63-839949-021	
400	3	400 A	2 x RA 400 P3 (63-811593-011)	+63-839972-011	+63-839972-021	
630	3	630 A	2 x RA 630 P3 (63-811593-021)	+63-839972-011	+63-839972-021	
1250	3	1250 A	2 x RA 1250 P3 (63-811601-011)	+63-930893-011	+63-930893-021	

Dimensions of change-over switch I-0-II

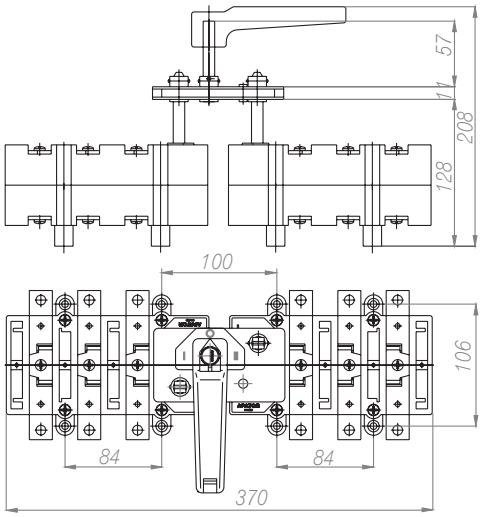

160 A – 250 A

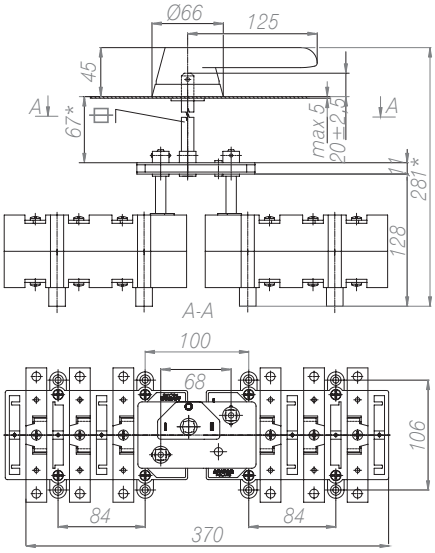

160 A – 250 A

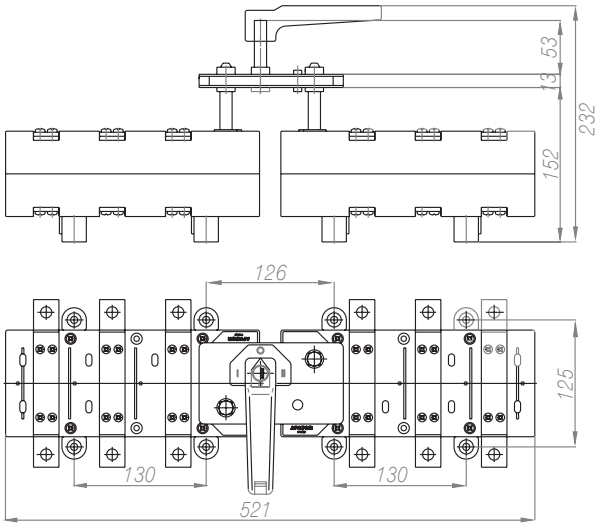

400 A – 630 A

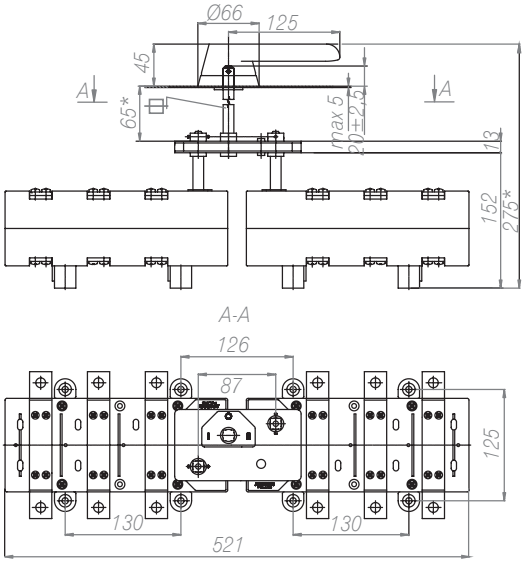

400 A – 630 A

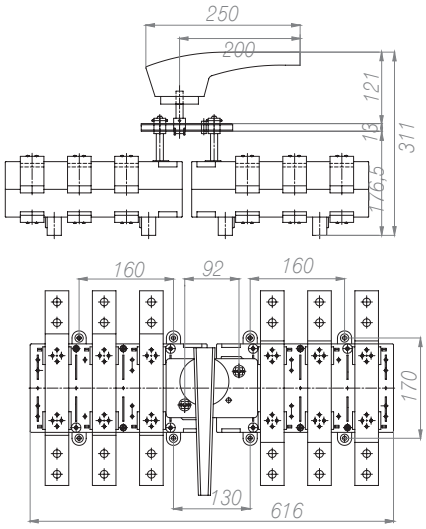

1250 A
handle mounted on shaft

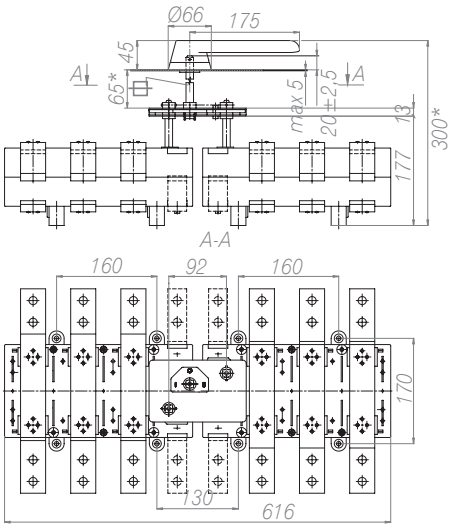

1250 A
handle mounted on distribution board's door

ENCLOSURES FOR RA TYPE SWITCH DISCONNECTORS	Order No.	
	ENSTO	HENSEL
For RA 100..., RAB 000...		
Enclosure with gray cover	OABP 203013 G	Mi 80101
Enclosure with transparent cover	OABP 203013 T	Mi 80100
Mounting plate	OMP 2030	
Distance parts	OELA 1.04	
Mounting plate	OMP 2030	
Distance parts	OELA 1.04	
For RA 160..., 250...		
Enclosure with gray cover	OABP 303018 G	Mi 80201
Enclosure with transparent cover	OABP 303018 T	Mi 80200
Mounting plate	OMP 3030	
Distance parts	OELA 1.04	
For RA 400..., 630...		
Enclosure with gray cover	OABP 304018 G	Mi 80211
Enclosure with transparent cover	OABP 304018 T	Mi 80210
Mounting plate	OMP 3040	
Distance parts	OELA 1.04	

* R1 handle mounted on shaft

L-minimal distance between shaft and door's hinge

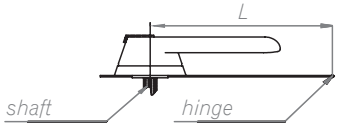

hole in enclosure's cover for mounting of OHB handles

mounting position of shaft and shaft's pin

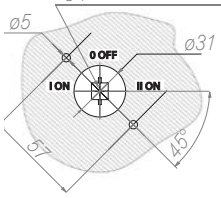

Switch disconnector	Length [mm]	Handle
RA 160	150	OHB 125JE011
RAB 250	150	OHB 125JE011
RA 400	150	OHB 125JE011
RAB 630	150	OHB 125JE011
RA 1250	200	OHB 175JE011

RAB SWITCH DISCONNECTORS FUSES

Table 115. RAB TECHNICAL DATA

Article		Unit	RAB 000	RAB 00	RAB 1	RAB 2	RAB 3
Parameters			Value				
Rated thermal current	I_{th}	A	100	160	250	400	630
Rated insulation voltage	U_i	V	1000				
Rated impulse withstand voltage	U_{imp}	kV	8				
Rated frequency		Hz	50 ÷ 60				
Rated switching current for AC 22A U_e = 690 V	I_e	A	100	125	250	400	-
Rated switching current for AC 22B U_e = 690 V	I_e	A	-	-	-	-	630
Rated switching current for AC 22A U_e = 690 V	I_e	A	40	80	-	-	-
Rated switching current for AC 22B U_e = 500 V	I_e	A	40	125	-	-	-
Rated switching current for AC 23A U_e = 415 V	I_e	A	-	-		-	630
Rated power dissipation		W	7,5	12	32	45	60
Fused short-circuit current o $I_n = I_{th}$		kA	100				
Mechanical durability		number of cycles	10000	8000	8000	5000	5000
Electrical durability at utilization category AC 22 A			1500	1000	1000	1000	1000
Duty		-	Continuous duty				
Protection degree IP		-	IP 00				
Weight		kg	1,05	2,0	3,65	4,2	7,5
Busbar cross-section		mm^2	15 x 2	25 x 4	2 x 25 x 4	2 x 30 x 5	2 x 40 x 60
Cable conductor cross-section		mm^2	35	120	240	2 x 185	-

Table 116. RAB SWITCH DISCONNECTORS FUSES WITH STANDARD CABLE TERMINALS

Type	I_n	Number of poles	Accesories*	Article	Article No.	
RAB 000	100 A	3	-	RAB 000 P3	on request	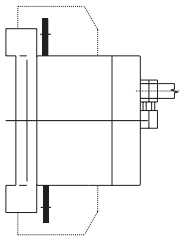
		3 + N	-	RAB 000 P3 N	on request	
		4	-	RAB 000 P4	63-823063-051	
		3	R1	RAB 000 P3/R	on request	
		3 + N	R1	RAB 000 P3 N/R	on request	
		4	R1	RAB 000 P4/R	on request	
RAB 00	160 A	3	-	RAB 00 P3	on request	
		3 + N	-	RAB 00 P3 N	on request	
		3	R1	RAB 00 P3/R	on request	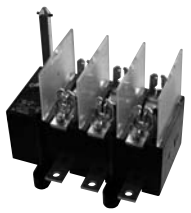
		3 + N	R1	RAB 00 P3 N/R	on request	
RAB 1	250 A	3	-	RAB 1 P3	on request	
		3 + N	-	RAB 1 P3 N	on request	
		3	R1	RAB 1 P3/R	on request	
		3 + N	R1	RAB 1 P3 N/R	on request	
RAB 2	400 A	3	-	RAB 2 P3	on request	
		3 + N	-	RAB 2 P3 N	on request	
		3	R1	RAB 2 P3/R	63-811529-061	
		3 + N	R1	RAB 2 P3 N/R	on request	
RAB 3	630 A	3	-	RAB 3 P3	on request	
		3 + N	-	RAB 3 P3 N	on request	
		3	R1	RAB 3 P3/R	63-811564-031	
		3 + N	R1	RAB 3 P3 N/R	on request	

*R1 - handle mounted on shaft
CAUTION!
N - 4th pole unswitchable, switchable 4th pole available only for RA100 type switch disconnectors!

Table 117. RAB SWITCH DISCONNECTORS FUSES WITH „A" TYPE CABLE TERMINALS

Type	I_n	Number of poles	Accesories*	Article	Article No.	
RAB 000	100 A	3	-	RAB 000 P3 A	on request	A
		3 + N	-	RAB 000 P3 NA	63-823063-101	
		4	-	RAB 000 P4 A	63-823063-061	
		3	R1	RAB 000 P3 A/R	on request	
		3 +N	R1	RAB 000 P3 NA/R	on request	
		4	R1	RAB 000 P4 A/R	on request	
RAB 00	160 A	3	-	RAB 00 P3 A	on request	
		3 + N	-	RAB 00 P3 NA	on request	
		3	R1	RAB 00 P3 A/R	on request	
		3 + N	R1	RAB 00 P3 NA/R	on request	
RAB 1	250 A	3	-	RAB 1 P3 A	on request	
		3 + N	-	RAB 1 P3 NA	on request	
		3	R1	RAB 1 P3 A/R	on request	
		3 + N	R1	RAB 1 P3 NA/R	on request	
RAB 2	400 A	3	-	RAB 2 P3 A	on request	
		3 + N	-	RAB 2 P3 NA	on request	
		3	R1	RAB 2 P3 A/R	on request	
		3 + N	R1	RAB 2 P3 NA/R	on request	
RAB 3	630 A	3	-	RAB 3 P3 A	on request	
		3 + N	-	RAB 3 P3 NA	on request	
		3	R1	RAB 3 P3 A/R	on request	
		3 + N	R1	RAB 3 P3 NA/R	on request	

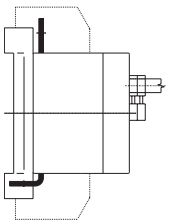

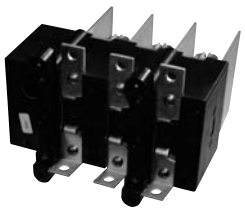

*R1 - handle mounted on shaft

Table 118. RAB SWITCH DISCONNECTORS FUSES WITH „B" TYPE CABLE TERMINALS

Type	I_n	Number of poles	Accesories*	Article	Article No.	
RAB 000	100 A	3	-	RAB 000 P3 B	on request	B
		3 + N	-	RAB 000 P3 NB	63-823063-111	
		3 + N	-	RAB 000 P4 B	63-823063-071	
		3	R1	RAB 000 P3 B/R	on request	
		3 + N	R1	RAB 000 P3 NB/R	on request	
		4	R1	RAB 000 P4 B/R	on request	
RAB 00	160 A	3	-	RAB 00 P3 B	on request	
		3 + N	-	RAB 00 P3 NB	on request	
		3	R1	RAB 00 P3 B/R	on request	
		3 + N	R1	RAB 00 P3 NB/R	on request	
RAB 1	250 A	3	-	RAB 1 P3 B	on request	
		3 + N	-	RAB 1 P3 NB	on request	
		3	R1	RAB 1 P3 B/R	on request	
		3 + N	R1	RAB 1 P3 NB/R	on request	
RAB 2	400 A	3	-	RAB 2 P3 B	on request	
		3 + N	-	RAB 2 P3 NB	on request	
		3	R1	RAB 2 P3 B/R	on request	
		3 + N	R1	RAB 2 P3 NB/R	on request	
RAB 3	630 A	3	-	RAB 3 P3 B	on request	
		3 + N	-	RAB 3 P3 NB	on request	
		3	R1	RAB 3 P3 B/R	on request	
		3 + N	R1	RAB 3 P3 NB/R	on request	

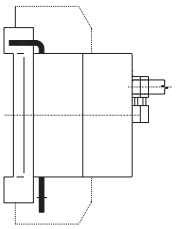

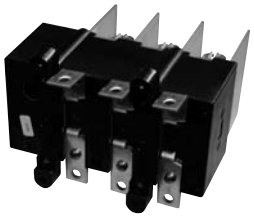

*R1 - handle mounted on shaft

Table 119. RAB SWITCH DISCONNECTORS FUSES WITH „C" TYPE CABLE TERMINALS

Type	I_n	Number of poles	Accesories*	Article	Article No.	
RAB 000	100 A	3	-	RAB 000 P3 C	63-823063-041	C 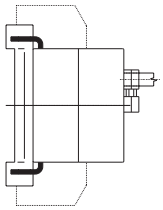
		3 + N	-	RAB 000 P3 NC	63-823063-121	
		4	-	RAB 000 P4 C	63-823063-081	
		3	R1	RAB 000 P3 C/R	on request	
		3 + N	R1	RAB 000 P3 NC/R	on request	
		4	R1	RAB 000 P4 C/R	on request	
RAB 00	160 A	3	-	RAB 00 P3 C	on request	
		3 + N	-	RAB 00 P3 NC	on request	
		3	R1	RAB 00 P3 C/R	on request	
		3 + N	R1	RAB 00 P3 NC/R	on request	
RAB 1	250 A	3	-	RAB 1 P3 C	on request	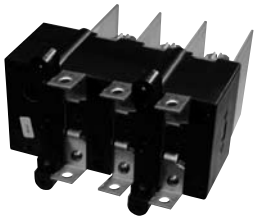
		3 + N	-	RAB 1 P3 NC	on request	
		3	R1	RAB 1 P3 C/R	on request	
		3 + N	R1	RAB 1 P3 NC/R	on request	
RAB 2	400 A	3	-	RAB 2 P3 C	on request	
		3 + N	-	RAB 2 P3 NC	on request	
		3	R1	RAB 2 P3 C/R	on request	
		3 + N	R1	RAB 2 P3 NC/R	on request	
RAB 3	630 A	3	-	RAB 3 P3 C	on request	
		3 + N	-	RAB 3 P3 NC	on request	
		3	R1	RAB 3 P3 C/R	on request	
		3 + N	R1	RAB 3 P3 NC/R	on request	

*R1 - handle mounted on shaft

Dimensions of RAB 000 (100 A)

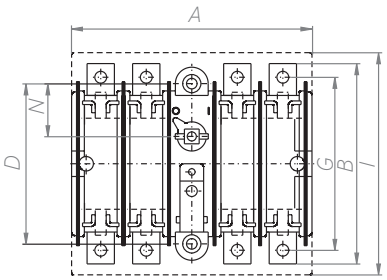

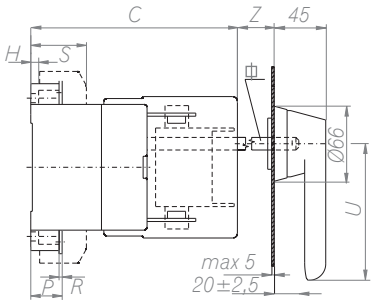

Version with handle mounted on distribution board's door

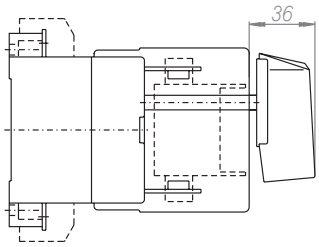

Version with handle mounted on shaft

Dimension	A	B	C	D	E	F	F1	G	H	I	K	L	L1	M	N	O	P	R	S	U	X	Y	Z	⏀	W
RAB 000	132	110	74	88	–	25	25	95	5	150	16	15	–	–	29	–	20	2	50	65	6,5	5,8	48	8	–

Dimensions of RAB 00, RAB 1, RAB 2, RAB 3

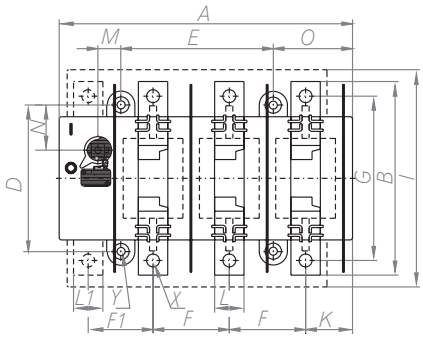

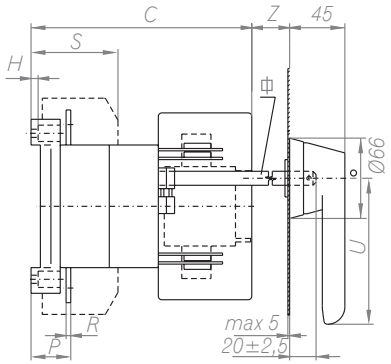

Dimension	A	B	C	D	E	F	F1	G	H	I	K	L	L1	M	N	O	P	R	S	U	X	Y	Z	⏀	W
RAB 00	176	132	150	110	84	42	42	115	5	170	30	20	20	16	36	51	26	3,5	61	95	8,5	5,8	15	10	20
RAB 1	250	174	189	125	130	65	55	149	8	225	40	25	25	20	38,5	67,5	34	4	86	125	11	7	15	12	25
RAB 2																	30	5							
RAB 3	300	240	215	170	160	80	70	200	8	270	45,5	40	30	19	56,5	83	40	6	97	145	13	7	20	12	–

Cable terminals of type A, B, C

A

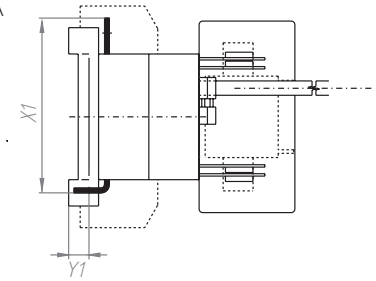

B

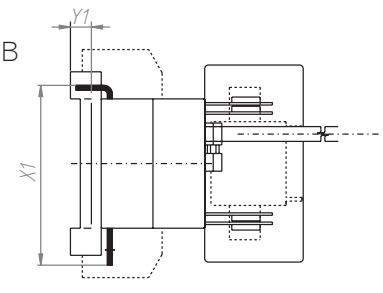

C

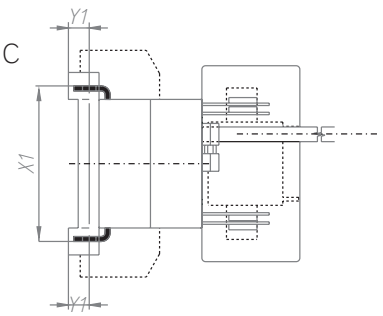

Dimensions of cable terminals	RAB 00			RAB 1			RAB 2		
	A	B	C	A	B	C	A	B	C
X1	111	111	90	140,5	140,5	116	146	146	127
Y1	8,5	8,5	8,5	8,5	8,5	8,5	13	13	13

CAUTION!
lengthening of shaft is possible by adding second shaft, connected by shaft link (see Accesories)

Dimensions of RA switch disconnectors, RAB switch disconnectors fuses (with cable terminals of type A, B, C) with side support element for mounting

*RA 160, RA 250, RAB 00**

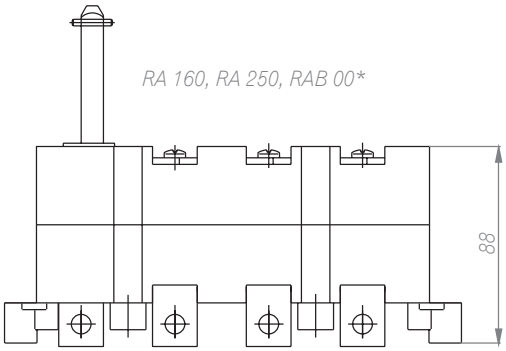

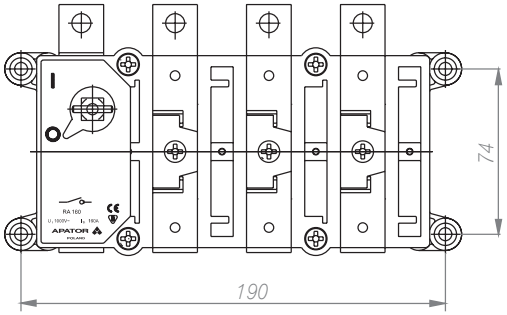

*RA 400, RA 630, RAB 1, RAB 2**

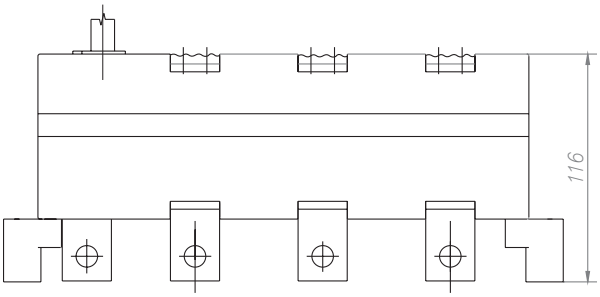

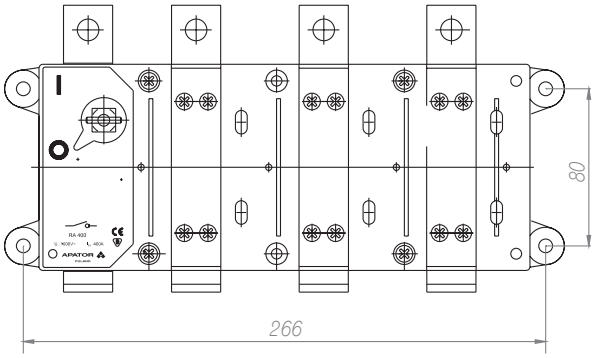

* ordered with switch

L-minimal distance between shaft and door's hinge

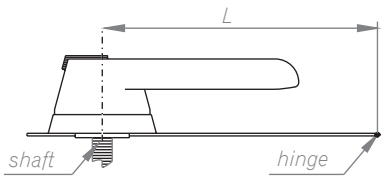

hole in enclosure's cover or door for mounting of OHB handles

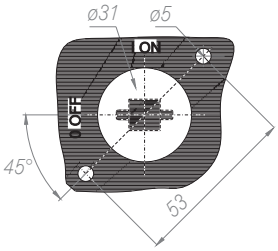

Switch disconnector	Length [mm]	Handle
RA 100	80	OH... 65 J8
RAB 000		
RA 160/250	120	OH... 95 J10
RAB 00		
RA 400/630	150	OH... 125 J12
RAB 1/2/3		

RIN SWITCH DISCONNECTORS

Type	I_n	Description	Article	Article No.	
RIN 250/RA	250 A	replacement for RIN 250-11	RA 250 P3N/RIN	63-823151-071	
		replacement for RIN250-13 in cast iron enclosure with degree of protection IP65	RA 250 P3N/Ż	63-811606-031	
		switch disconnector + cast iron cover (RIN 250-13)	RA 250 P3N/S	63-811606-011	
RIN 400	400 A	RIN - switch disconnector	RIN 400-11	63-811200-011	
		RIN in cast iron enclosure	RIN 400-13	63-811222-011	
		change-over switch I-0-II	RIN 400 P	63-811293-011	
ŁR 400/RIN	400 A	RIN - replacement for ŁR400	RIN 400 S	63-811226-011	
RIN 630/RA	630 A	replacement for RIN 630-11	RA 630 P3/RIN	63-811687-011	
RA 160 in enclosure	160 A	in cast iron enclosure with degree of protection IP65	RA 160 P3N/Ż	63-811606-021	

Replacement for RIN
Dimensions of switch disconnectors RA 250 P3N/RIN

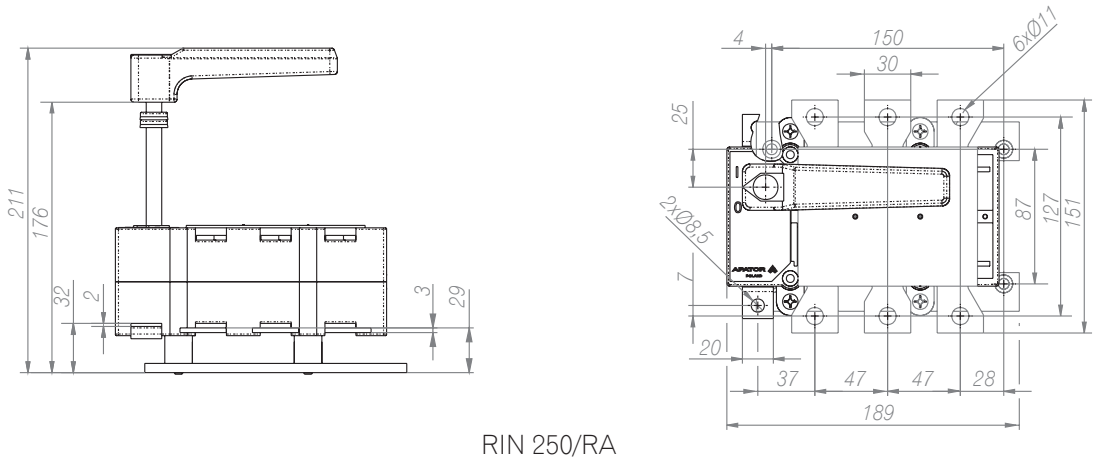

RIN 250/RA

Replacement for RIN
Dimensions of switch disconnectors RA 630 P3/RIN

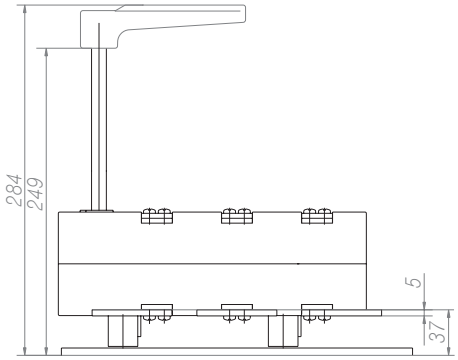

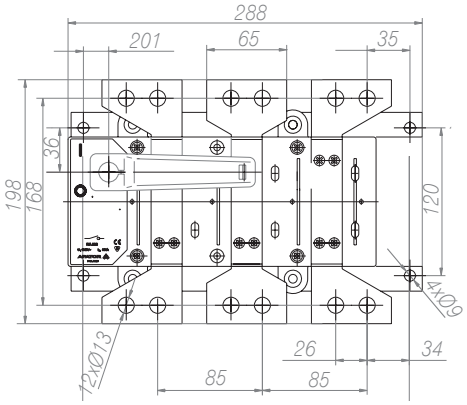

RIN 630/RA

Dimensions of RA 160, RA 250 in cast iron enclosure

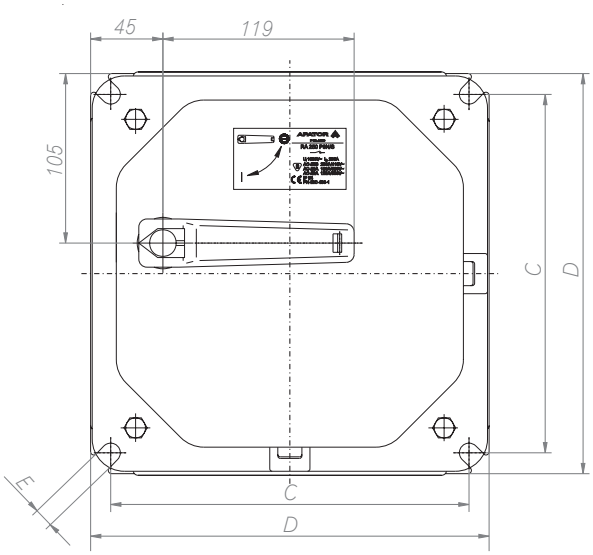

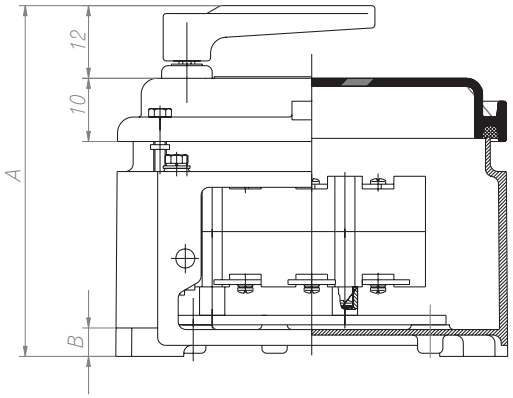

	Dimensions				
Type	A	B	C	D	E
RA 160 P3N/Ż	222	18	223	248	12
RA 250 P3N/Ż	222	18	223	248	12

REPLACEMENT FOR 400 A SWITCH DISCONNECTOR - RA 400/O

Table 120. TECHNICAL DATA

Article			RA 400/O
Parameters			The value
Rated thermal current	I_{th}	A	400
Rated insulation voltage	U_i	V	1000
Rated impulse withstand voltage	U_{imp}	kV	8
Rated frequency		Hz	50 ÷ 60
Rated switching current for AC 22A U_e = 690 V	I_e	A	250
Rated switching current for AC 22B U_e = 690 V	I_e	A	400
Rated short-circuit making capacity	I_{cm}	kA_{max}	25
Rated short-time withstand current 1s	I_{cw}	kA	15
Mechanical durability		number of cycles	5000
Electrical durability at utilization category AC22A			1000
Duty		-	continuous work
IP degree of protection		-	IP 00
Weight		kg	3,3
Busbar cross-section		mm^2	2 x 25 x 4
Conductor cross-section		mm^2	240

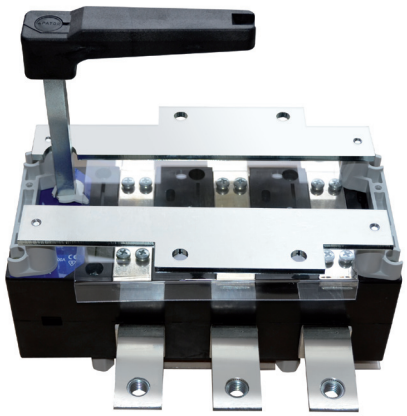

Article number: 63-811866-001

ADVANTAGES

- switching on/switchng off of circuits under load
- AC 22B utilization category
- greater mechanical durability

Dimensions

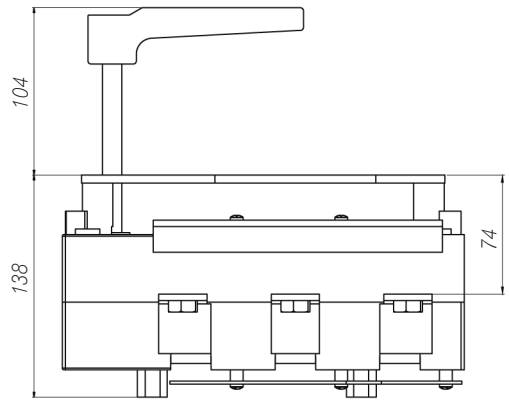

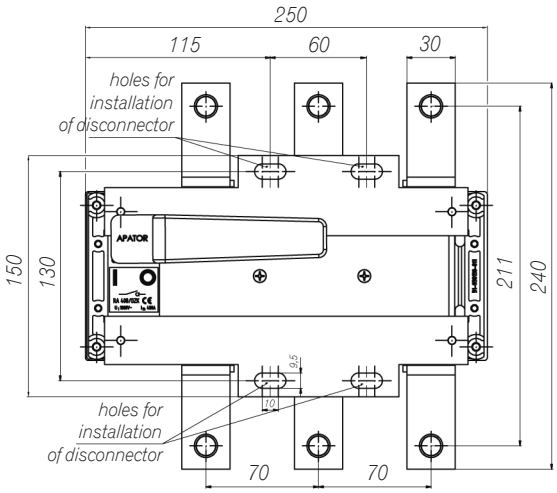

FUSE LINK SHROUDS

Article No.	For use with switch of type	Number of shrouds mounted on switch	Number of shrouds in package	Additional informations
53-944921-011	RAB 000	1	1	3-pole
53-944921-021				4-pole
53-944921-031	RAB 00	1	1	
53-944921-041	RAB 1; RAB 2	1	1	
53-944921-051	RAB 3	1	1	



HANDLES

Handle for mounting on doors with IP65, ON/OFF position marking, designed for locking by up to three padlocks in OFF („0") position, door interlock with release mechanism for opening in position I/ON, RA../R, RAB../R - handle mounted on shaft

Article	Colour	Handl length [mm]	For shaft with side length of [mm]	For use with switch of type	Set (pcs.)
OHB 65J8 OHY 65J8	black yellow-red	65	8	RA 100 RAB 000	1
OHB 95J10 OHY 95J10	black yellow-red	95	10	RA 160/250 RAB 00	1
OHB 125J12 OHY 125J12	black yellow-red	125	12	RA 400/630 RAB 1/2	1
OHB 145J12 OHY 145J12	black yellow-red	145	12	RAB 3	1
OHB 175J12 OHY 175J12	black yellow-red	175	12	RA 1250	1



SHAFTS

Shafts of various length for switch disconnectors mounted in distribution boards

Article No.	Shaft size [mm]	Length [mm]	For use with switch of type	Set (pcs.)
51-943952-011	⌷8	100	RA 100 RAB 000	1
51-943952-021		200		
51-943952-031		400		
51-943952-041		600		
51-944280-011	⌷10	100	RA 160/250 RAB 00	1
51-944280-021		200		
51-944280-031		400		
51-944280-041		600		
0659900400	⌷12	100	RA 400/630/1250 RAB 1/2/3	1
0659900401		200		
51-943953-041		400		
0659900402		600		



Extension shafts for use with coupling mechanism for change-over switch disconnectors:
- handle mounted on shaft - shaft with side length of 10 mm with shaft link
- handle mounted on distribution board's door - shaft with side length of 12 mm with shaft link

SHAFT LINKS

For fixing extension shaft to switch disconnector's shaft.

Article No.	Shaft size [mm]	For use with switch of type	Set (pcs.)
53-944917-011	⌷8	RA 100, RAB 000	1
53-944917-021	⌷10	RA 160/250, RAB 00	1
53-944917-031	⌷12	RA 400/630/1250, RAB 1/2/3	1



EXTENSION SHAFTS WITH SHAFT LINKS

Article No.	Shaft size [mm]	Length	For use with switch of type	Set (pcs.)
63-946239-011	8	100	RA 100 RAB 000	1
63-946239-021		200		1
63-946239-031		400		1
63-946239-041		600		1
63-946240-011	10	100	RA 160/250 RAB 00	1
63-946240-021		200		1
63-946240-031		400		1
63-946240-041		600		1
63-946241-011	12	100	RA 400/630/1250 RAB 1/2/3	1
63-946241-021		200		1
63-946241-041		600		1
63-946241-031		600		1



TERMINAL SHROUDS

Article No.	For use with switch of type	Number of shrouds mounted on switch	Number of shrouds in package
51-839842-011	RA 100, RAB 000	2	1
51-838546-011	RA 160/250, RAB 00	2	1
51-839843-011	RA 400/630, RAB 1/2/3	6 (8)*	1

*for 3-pole switch disconnectors - 6 pcs. , for 3-pole switch disconnectors with N-bar - 8 pcs.



SUPPORT ELEMENT FOR MOUNTING ON SUPPORT STRUCTURE

Article No.	For use with switch of type	Number of pcs. in package (set)
On request	RAB 00, RA 160, RA 250	1
On request	RA 400, RA 630, RAB 1, RAB 2	1



COUPLING MECHANISM FOR CHANGE-OVER SWITCH DISCONNECTORS

Three positions: I-0-II. Mounted on shafts of switch disconnectors.

Article No.	For use with switch of type	Number of pcs. in package (set)
63-839949-011	RA 160/250	1
63-839972-011	RA 400/630	1
63-930893-011	RA 1250	1
Article No.	**For use with switch of type**	**Number of pcs. in package (set)**
63-839949-021	RA 160/250	1
63-839972-021	RA 400/630	1
63-930893-021	RA 1250	1



AUXILIARY CONTACTS

For signalling of position of switch disconnectors contacts (ON/OFF).

Article No.	Auxiliary switch parameters	For use with switch of type	Number of pcs.in package	Additional information
53-944915-011	AC – 11 U_e 220 V~ I_e 1 A DC – 13 U_e 220 V~ I_e 0,25 A	RA 100 RAB 000	1	one switch
53-944916-011	AC – 11 U_e 220 V~ I_e 1 A DC – 13 U_e 220 V= I_e 0,25 A	RA 160/250 RAB 00	1	one switch
53-944916-031		RA 400/630 RAB 1/2/3		
53-944916-021	AC – 11 U_e 220 V~ I_e 1 A DC – 13 U_e 220 V= I_e 0,25 A	RA 160/250 RAB 00	1	one switch
53-944916-041		RA 400/630 RAB 1/2/3		

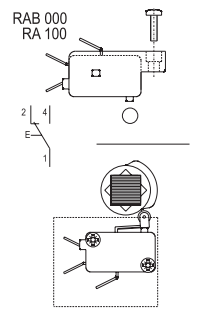

for remaining switch disconnectors