Product data sheet
Characteristics

ZB4BW433
green Ø40 illum mushroom pushbutton head Ø22 spring return for integral LED



Main

Range of product	Harmony XB4
Product or component type	Head for illuminated push-button
Device short name	ZB4
Product compatibility	Integral LED
Bezel material	Chromium plated metal
Mounting diameter	22 mm
Sale per indivisible quantity	1
Shape of signaling unit head	Round
Type of operator	Spring return
Operator profile	Green mushroom Ø 40 mm unmarked

Complementary

CAD overall width	40 mm
CAD overall height	40 mm
CAD overall depth	53 mm
Product weight	0.051 kg
Resistance to high pressure washer	7000000 Pa at 55 °C,distance: 0.1 m
Mechanical durability	5000000 cycles
Electrical composition code	M1 for <= 6 contacts using single blocks in front mounting with integral LED M2 for <= 6 contacts using single and double blocks in front mounting with integral LED M6 for <= 2 contacts using single blocks in front mounting with integral LED and transformer M10 for <= 2 contacts using single blocks in front mounting with integral LED

Environment

Protective treatment	TH
Ambient air temperature for storage	-40...70 °C
Ambient air temperature for operation	-25...70 °C
Overvoltage category	Class I conforming to IEC 60536
IP degree of protection	IP66 conforming to IEC 60529
NEMA degree of protection	NEMA 13 NEMA 4X
IK degree of protection	IK05 conforming to EN 50102
Standards	EN/IEC 60947-1 EN/IEC 60947-5-1 EN/IEC 60947-5-4 EN/IEC 60947-5-5 JIS C 4520 UL 508 CSA C22.2 No 14
Product certifications	BV CSA DNV GL LROS (Lloyds register of shipping) RINA UL listed

The information provided in this documentation contains general descriptions and/or technical characteristics of the performance of the products contained herein.
This documentation is not intended as a substitute for and is not to be used for determining suitability or reliability of these products for specific user applications.
It is the duty of any such user or integrator to perform the appropriate and complete risk analysis, evaluation and testing of the products with respect to the relevant specific application or use thereof.
Neither Schneider Electric Industries SAS nor any of its affiliates or subsidiaries shall be responsible or liable for misuse of the information contained herein.

Vibration resistance	5 gn (f = 2...500 Hz) conforming to IEC 60068-2-6
Shock resistance	30 gn (duration = 18 ms) for half sine wave acceleration conforming to IEC 60068-2-27 50 gn (duration = 11 ms) for half sine wave acceleration conforming to IEC 60068-2-27

Dimensions

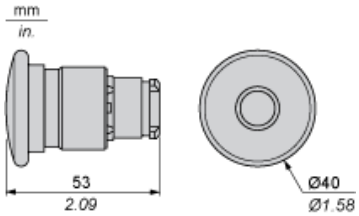

Panel Cut-out for Pushbuttons, Switches and Pilot Lights (Finished Holes, Ready for Installation)

Connection by Screw Clamp Terminals or Plug-in Connectors or on Printed Circuit Board	Connection by Faston Connectors
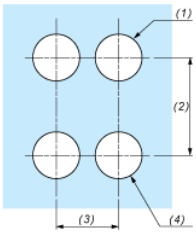	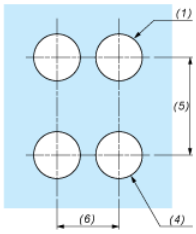

(1) Diameter on finished panel or support
(2) 40 mm min. / 1.57 in. min.
(3) 30 mm min. / 1.18 in. min.
(4) Ø 22.5 mm / 0.89 in. recommended (Ø 22.3 mm $_{0}^{+0.4}$ / 0.88 in. $_{0}^{+0.016}$)
(5) 45 mm min. / 1.78 in. min.
(6) 32 mm min. / 1.26 in. min.

Pushbuttons, Switches and Pilot Lights for Printed Circuit Board Connection

Panel Cut-outs (Viewed from Installer's Side)

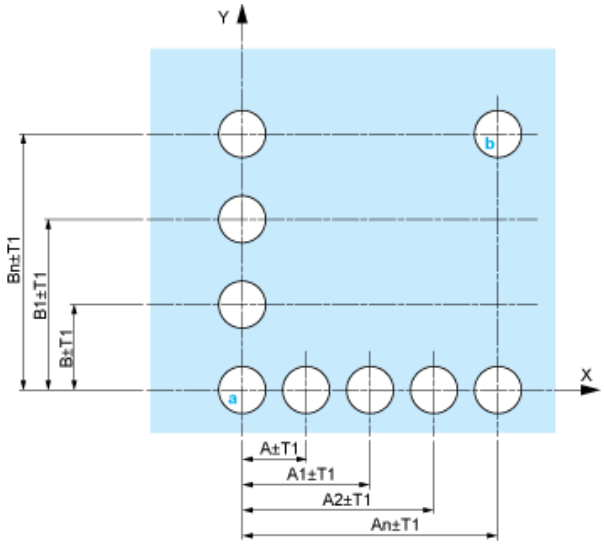

A: 30 mm min. / 1.18 in. min.
B: 40 mm min. / 1.57 in. min.

Printed Circuit Board Cut-outs (Viewed from Electrical Block Side)

Dimensions in mm

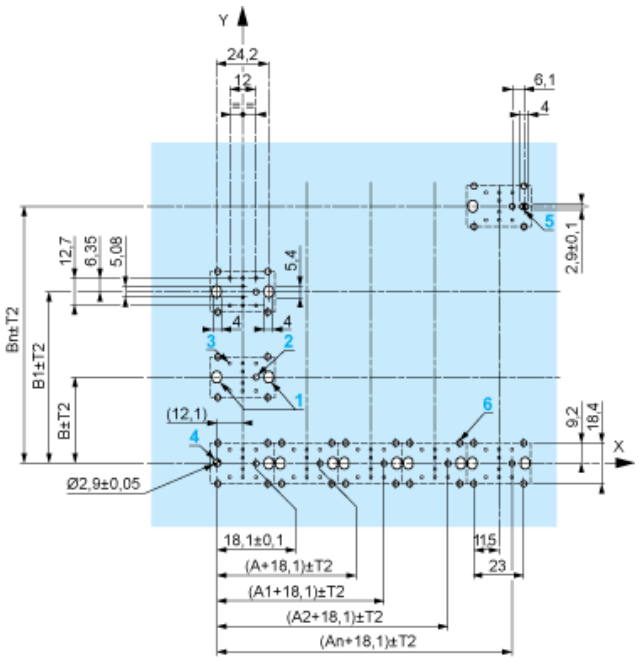

A: 30 mm min.
B: 40 mm min.

Dimensions in in.

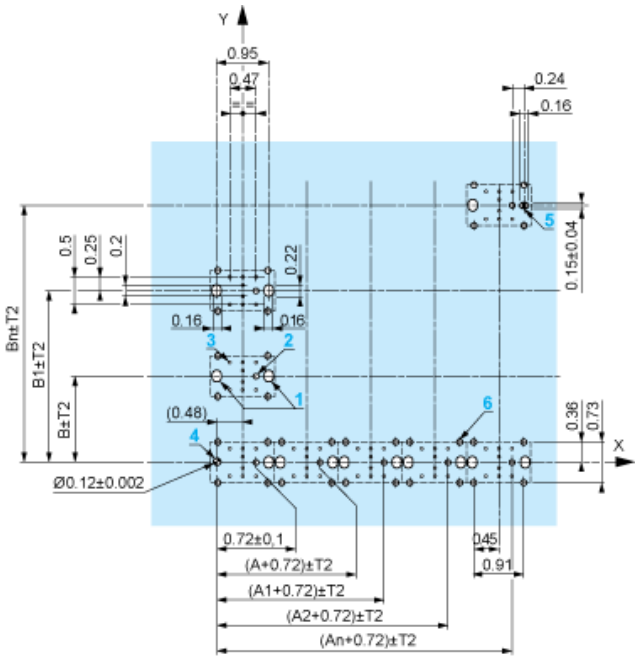

A: 1.18 in. min.
B: 1.57 in. min.

General Tolerances of the Panel and Printed Circuit Board

The cumulative tolerance must not exceed 0.3 mm / 0.012 in: T1 + T2 = 0.3 mm max.

Installation Precautions

- Minimum thickness of circuit board: 1.6 mm / 0.06 in.
- Cut-out diameter: 22.4 mm ± 0.1 / 0.88 in. ± 0.004
- Orientation of body/fixing collar ZB4 BZ009: ± 2°30' (excluding cut-outs marked a and b).
- Tightening torque of screws ZBZ 006: 0.6 N.m (5.3 lbf.in) max.
- Allow for one ZB4 BZ079 fixing collar/pillar and its fixing screws:
  - every 90 mm / 3.54 in. horizontally (X), and 120 mm / 4.72 in. vertically (Y).
  - with each selector switch head (ZB4 BD•, ZB4 BJ•, ZB4 BG•).

The fixing centers marked a and b are diagonally opposed and must align with those marked 4 and 5.

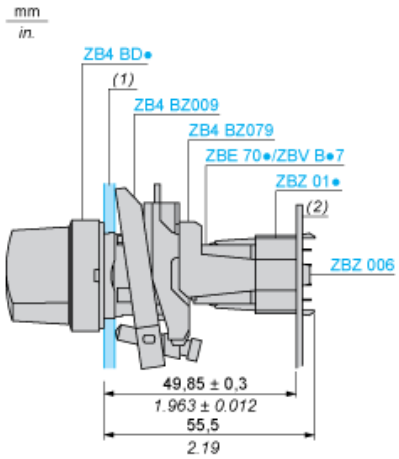

(1) Panel
(2) Printed circuit board

Mounting of Adapter (Socket) ZBZ 01•

- 1 2 elongated holes for ZBZ 006 screw access
- 2 1 hole Ø 2.4 mm ± 0.05 / 0.09 in. ± 0.002 for centring adapter ZBZ 01•
- 3 8 × Ø 1.2 mm / 0.05 in. holes
- 4 1 hole Ø 2.9 mm ± 0.05 / 0.11 in. ± 0.002, for aligning the printed circuit board (with cut-out marked a)
- 5 1 elongated hole for aligning the printed circuit board (with cut-out marked b)
- 6 4 holes Ø 2.4 mm / 0.09 in. for clipping in adapter ZBZ 01•

Dimensions An + 18.1 relate to the Ø 2.4 mm ± 0.05 / 0.09 in. ± 0.002 holes for centring adapter ZBZ 01•.

Electrical Composition Corresponding to Codes M1 and M7



Electrical Composition Corresponding to Codes M2 and M8

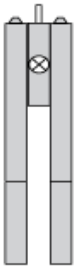

Electrical Composition Corresponding to Codes M6 and P2

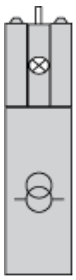

Electrical Composition Corresponding to Codes M5, M10, MF1, MR1 and MF2

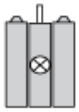

Legend

Single contact



Double contact



Light block



Possible location

