Product data sheet
Characteristics

XALG02
empty control station-severe environments-black-2 cut-outs-2 vertical openings



Main

Range of product	Harmony XALG
Product or component type	Empty control station
Device short name	XALG
Product destination	For XB5 Ø 22 mm control and signalling units
Environmental characteristic	Severe ambiance
Colour of base of enclosure	Black RAL 9005
Colour of cover	Black RAL 9005
Material	Mineral reinforced polyamide
Cable entry	2 knock-outs for ISO M20 cable entry
IP degree of protection	IP69 K conforming to IEC 60529 IP66 conforming to IEC 60529

Complementary

Assembly style	For customer assembly
Number of cut-out	2 cut-outs, vertical operator cut-out centre distance: 30 mm
CAD overall width	135 mm
CAD overall height	72 mm
CAD overall depth	65 mm
Product weight	0.28 kg
Resistance to high pressure washer	10 MPa at 80 °C,distance: 0.2 m

Environment

Protective treatment	TC TH
Ambient air temperature for storage	-40...70 °C
Ambient air temperature for operation	-25...70 °C
Class of protection against electric shock	Class II conforming to EN/IEC 61140
IK degree of protection	IK05 conforming to EN 50102

The information provided in this documentation contains general descriptions and/or technical characteristics of the performance of the products contained herein.
This documentation is not intended as a substitute for and is not to be used for determining suitability or reliability of these products for specific user applications.
It is the duty of any such user or integrator to perform the appropriate and complete risk analysis, evaluation and testing of the products with respect to the relevant specific application or use thereof.
Neither Schneider Electric Industries SAS nor any of its affiliates or subsidiaries shall be responsible or liable for misuse of the information contained herein.

Resistance to chemical agents	Not resistant to nitric acid (2 %) Not resistant to lactic acid at 90 °C Not resistant to hydrogen peroxide (30 %) Not resistant to formic acid (10 %) at 50 °C Limited resistance to boric acid Limited resistance to acetic acid (10 %) Good resistant to uric acid (20 %) Good resistant to detergent at 60 °C Good resistant to acetone Good resistance to petroleum Good resistance to oils (vegetable, mineral) Good resistance to motor oils and greases Good resistance to milk Good resistance to lactic acid at 10 °C Good resistance to fatty alcohols Good resistance to fatty acids Good resistance to ethylene Good resistance to ethanol Good resistance to ethane Good resistance to cutting compounds Good resistance to citric acid (10 %) Good resistance to butter Good resistance to benzene Good resistance to ammonia
Standards	EN/IEC 60947-1 EN/IEC 60947-5-1

Dimensions

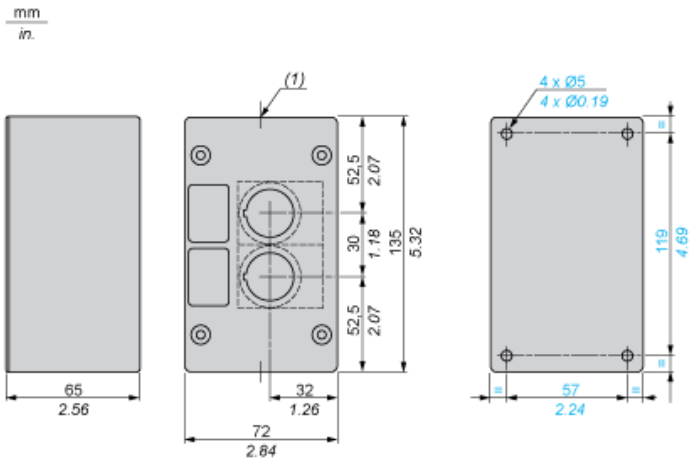

(1) 2 ISO 20 cable entries.