Product data sheet
Characteristics

XAPM1501H29
die-cast empty control station - XAPM - Ø 22 - zinc alloy - 1 opening



Main

Range of product	Harmony XAP
Product or component type	Die-cast empty control station
Device short name	XAPM
Product destination	For Ø 22 mm control and signalling units
Product front plate size	80 x 80 mm
Usable depth	74.5 mm
Number of cut-out	1 cut-out
Colour of base of enclosure	Blue
Colour of cover	Blue
Material	Zinc alloy
Cable entry	1 hole without blanking plug for ISO 429248 cable gland 20 mm 1 hole with blanking plug for ISO 429248 cable gland 20 mm
Product mounting	Flush mounting
IP degree of protection	IP657 conforming to NF C 20-010 IP65 conforming to IEC 60529

Complementary

Number of vertical rows	1
Product weight	0.605 kg

Environment

Protective treatment	TC
Ambient air temperature for storage	-40...70 °C
Ambient air temperature for operation	-25...70 °C
Class of protection against electric shock	Class I conforming to NF C 20-030 Class I conforming to IEC 60536

The information provided in this documentation contains general descriptions and/or technical characteristics of the performance of the products contained herein.
This documentation is not intended as a substitute for and is not to be used for determining suitability or reliability of these products for specific user applications.
It is the duty of any such user or integrator to perform the appropriate and complete risk analysis, evaluation and testing of the products with respect to the relevant specific application or use thereof.
Neither Schneider Electric Industries SAS nor any of its affiliates or subsidiaries shall be responsible or liable for misuse of the information contained herein.

XAPM1501H29

Dimensions and Fixing

Refer to the product characteristics to get the number of cut-outs.

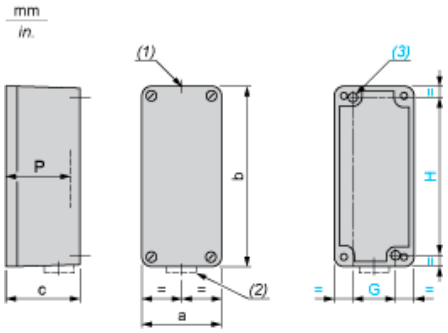

(1) 1 hole, without blanking plug, for cable gland with 14 mm/0.55 in. maximum clamping capacity
(2) 1 hole, with blanking plug (protrusion 6 mm/0.23 in.), for cable gland with 14 mm/0.55 in. maximum clamping capacity
(3) 2 x Ø 5.6 mm/0.22 in. holes, depth 20 mm/0.78 in.
P Usable depth

a		b		c		G		H		P	
mm	in.	mm	in.	mm	in.	mm	in.	mm	in.	mm	in.
80	3.15	80	3.15	77	3.03	50	1.97	65	2.56	74.5	2.93