Product data sheet
Characteristics

XPSBAE5120P
module XPSBAE - two-hand control III A - 24 V AC DC



Main

Range of product	Preventa Safety automation
Product or component type	Preventa safety module
Safety module name	XPSBAE
Safety module application	For electrical monitoring of two-hand control stations
Function of module	Monitoring two-hand control station type IIIA
Safety level	Can reach SILCL 1 conforming to EN/IEC 62061 Can reach PL c/category 1 conforming to EN/ISO 13849-1
Safety reliability data	PFHd = 2.1E-6 1/h conforming to EN/IEC 62061 MTTFd = 55 years conforming to EN/ISO 13849-1
Connections - terminals	Captive screw clamp terminals, clamping capacity: 2 x 0.2...2 x 1 mm² solid cable without cable end Captive screw clamp terminals, clamping capacity: 2 x 0.2...2 x 1.5 mm² stranded cable without cable end Captive screw clamp terminals, clamping capacity: 1 x 0.2...1 x 2.5 mm² solid cable without cable end Captive screw clamp terminals, clamping capacity: 1 x 0.2...1 x 2.5 mm² stranded cable without cable end Captive screw clamp terminals, clamping capacity: 2 x 0.5...2 x 1.5 mm² flexible cable with cable end, with double bezel Captive screw clamp terminals, clamping capacity: 2 x 0.25...2 x 1 mm² flexible cable with cable end, without bezel Captive screw clamp terminals, clamping capacity: 1 x 0.25...1 x 2.5 mm² flexible cable with cable end, without bezel Captive screw clamp terminals, clamping capacity: 1 x 0.25...1 x 1.5 mm² flexible cable with cable end, with bezel
Output type	Relay 1 NO, volt-free
Number of additional circuits	1 NC
[Us] rated supply voltage	24 V AC/DC (- 15...10 %)

Complementary

Synchronisation time between inputs	0.5 s
Supply frequency	50/60 Hz
Power consumption	0.8 W
Power consumption	2.4 VA
Input protection type	Internal, electronic
Number of inputs	1 NC + NO
Input current	25 mA NO 2.5 mA NC
Input compatibility	Two-hand control conforming to EN 574
Control circuit voltage	24 V DC
Breaking capacity	: inrush 1800 VA C300 : holding 180 VA AC-15 for relay output
Breaking capacity	2 A / 24 V - L/R = 20 ms, DC-13 for relay output
[Ith] conventional free air thermal current	5 A

The information provided in this documentation contains general descriptions and/or technical characteristics of the performance of the products contained herein.
This documentation is not intended as a substitute for and is not to be used for determining suitability or reliability of these products for specific user applications.
It is the duty of any such user or integrator to perform the appropriate and complete risk analysis, evaluation and testing of the products with respect to the relevant specific application or use thereof.
Neither Schneider Electric Industries SAS nor any of its affiliates or subsidiaries shall be responsible or liable for misuse of the information contained herein.

Associated fuse rating	6 A fast blow 4 A gG for relay output conforming to EN/IEC 60947-5-1
Minimum output current	10 mA for relay output
Minimum output voltage	17 V for relay output
Response time on input open	<= 20 ms
[Ui] rated insulation voltage	300 V, degree of pollution 2 conforming to IEC 60947-5-1
[Uimp] rated impulse withstand voltage	4 kV overvoltage category III, conforming to DIN VDE 0110 part 1 4 kV overvoltage category III, conforming to IEC 60947-5-1
Local signalling	2 LEDs
Mounting support	35 mm symmetrical DIN rail
Product weight	0.1 kg

Environment

Standards	EN/IEC 60204-1 EN/IEC 60947-5-1 EN/ISO 13849-1 EN 62061 EN 574 type III A EN 60947-01
Product certifications	CSA TÜV UL
IP degree of protection	IP40(Enclosure) conforming to EN/IEC 60529 IP20(Terminals) conforming to EN/IEC 60529
Ambient air temperature for operation	-25...55 °C
Ambient air temperature for storage	-25...75 °C

Offer Sustainability

Sustainable offer status	Green Premium product
RoHS (date code: YYWW)	Compliant - since 1227 - Schneider Electric declaration of conformity
REACh	Reference not containing SVHC above the threshold
Product environmental profile	Available Download Product Environmental
Product end of life instructions	Available Download End Of Life Manual

Dimensions

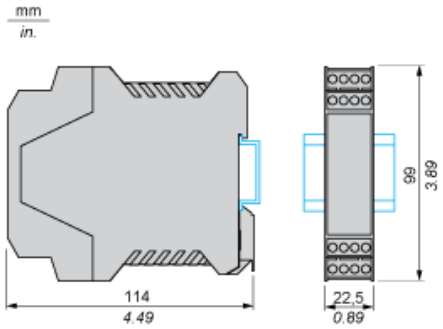

Wiring Diagrams

Refer to the Instruction Sheet

To download the instruction sheet, follow below procedure:

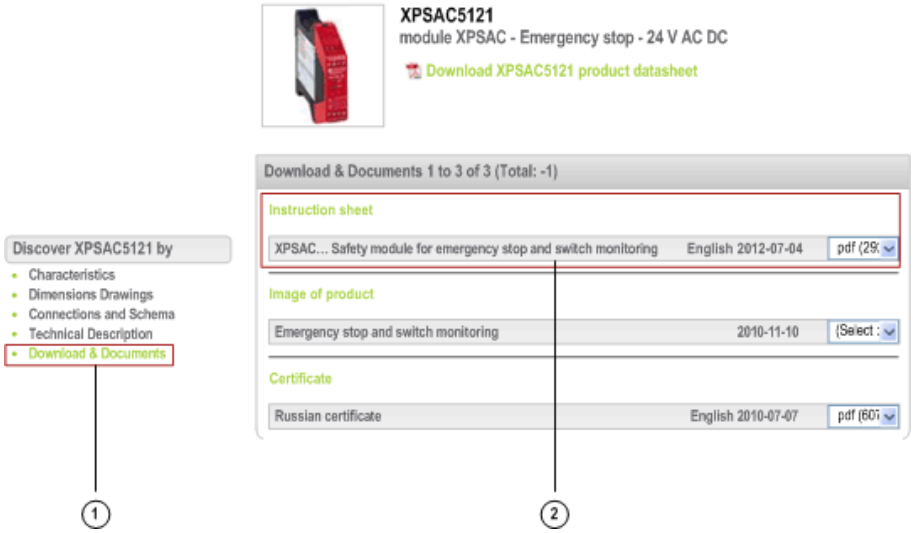

1 Click on Download & Documents.
2 Click on Instruction sheet.