

Contactor, 3p+2N/O+2N/C, 132kW/400V/AC3

Part no. DILM250/22(RDC48)
Article no. 208199
Catalog No. XTCE250L22TD

Powering Business Worldwide

Delivery programme

Product range			Contactors
Application			Contactors for Motors
Subrange			Comfort devices greater than 170 A
Utilization category			AC-1: Non-inductive or slightly inductive loads, resistance furnaces NAC-3: Normal AC induction motors: starting, switch off during running AC-4: Normal AC induction motors: starting, plugging, reversing, inching
Connection technique			Screw connection
Rated operational current			
AC-1			
Conventional free air thermal current, 3 pole, 50 - 60 Hz			
Open			
at 40 °C	$I_{th} = I_e$	A	430
enclosed	I_{th}	A	300
Conventional free air thermal current, 1 pole			
open	I_{th}	A	825
enclosed	I_{th}	A	742
Max. rating for three-phase motors, 50 - 60 Hz			
AC-3			
220 V 230 V	P	kW	75
380 V 400 V	P	kW	132
660 V 690 V	P	kW	240
1000 V	P	kW	108
AC-4			
220 V 230 V	P	kW	62
380 V 400 V	P	kW	110
660 V 690 V	P	kW	189
1000 V	P	kW	108
Contact sequence			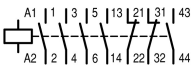
Can be combined with auxiliary contact			DILM820-XHI…
Actuating voltage			RDC 48: 24 - 48 V DC
Voltage AC/DC			DC operation
Contacts			
N/O = Normally open			2 N/O
N/C = Normally closed			2 NC
Auxiliary contacts			
possible variants at auxiliary contact module fitting options			on the side: 2 x DILM820-XHI11(V)-SI; 2 x DILM820-XHI11-SA
Side mounting auxiliary contacts			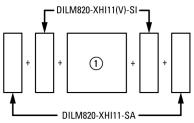
Instructions			integrated suppressor circuit in actuating electronics 660 V, 690 V or 1000 V: not directly reversing

Technical data

General

Standards			IEC/EN 60947, VDE 0660, UL, CSA
Lifespan, mechanical			
AC operated	Operations	x 10^6	10

DC operated	Operations	x 10^6	10
Operating frequency, mechanical			
AC operated	Operations/h		3000
DC operated	Operations/h		3000
Climatic proofing			Damp heat, constant, to IEC 60068-2-78 Damp heat, cyclic, to IEC 60068-2-30
Ambient temperature			
Open		°C	-40 - +60
Enclosed		°C	- 40 - + 40
Storage		°C	- 40 - + 80
Mounting position			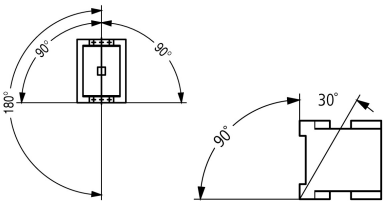
Mechanical shock resistance (IEC/EN 60068-2-27)			
Half-sinusoidal shock, 10 ms			
Main contacts			
N/O contact		g	10
Auxiliary contacts			
N/O contact		g	10
N/C contact		g	8
Degree of Protection			IP00
Protection against direct contact when actuated from front (EN 50274)			Finger and back-of-hand proof with terminal shroud or terminal block
Weight			
AC operated		kg	7.23
DC operated		kg	7.23
Weight		kg	7.23
Terminal capacity main cable			
Flexible with cable lug		mm^2	50 - 240
Stranded with cable lug		mm^2	70 - 240
Solid or stranded		AWG	2/0 - 500 MCM
Flat conductor	Lamellenzahl x Breite x Dicke	mm	Fixing with flat cable terminal or cable terminal blocks See terminal capacity for cable terminal blocks
Busbar	Breite	mm	25
Main cable connection screw/bolt			M10
Tightening torque		Nm	24
Terminal capacity control circuit cables			
Solid		mm^2	1 x (0.75 - 2.5) 2 x (0.75 - 2.5)
Flexible with ferrule		mm^2	1 x (0.75 - 2.5) 2 x (0.75 - 2.5)
Solid or stranded		AWG	2 x (18 - 12)
Control circuit cable connection screw/bolt			M3.5
Tightening torque		Nm	1.2
Tool			
Main cable			
Width across flats		mm	16
Control circuit cables			
Pozidriv screwdriver		Size	2

Main conducting paths

Rated impulse withstand voltage	U_{imp}	V AC	8000
Overvoltage category/pollution degree			III/3
Rated insulation voltage	U_i	V AC	1000
Rated operational voltage	U_e	V AC	1000

Safe isolation to EN 61140			
between coil and contacts		V AC	500
between the contacts		V AC	500
Making capacity (p.f. to IEC/EN 60947)		A	3000
Breaking capacity			
220 V 230 V		A	2500
380 V 400 V		A	2500
500 V		A	2500
660 V 690 V		A	2500
1000 V		A	760
Component lifespan			
			AC1: See → Engineering, characteristic curves AC3: See → Engineering, characteristic curves AC4: See → Engineering, characteristic curves
Short-circuit rating			
Short-circuit protection maximum fuse			
Type “2” coordination			
400 V	gG/gL 500 V	A	315
690 V	gG/gL 690 V	A	315
1000 V	gG/gL 1000 V	A	160
Type “1” coordination			
400 V	gG/gL 500 V	A	400
690 V	gG/gL 690 V	A	400
1000 V	gG/gL 1000 V	A	200

AC

AC-1			
Rated operational current			
Conventional free air thermal current, 3 pole, 50 - 60 Hz			
Open			
at 40 °C	$I_{th} = I_e$	A	430
at 50 °C	$I_{th} = I_e$	A	380
at 55 °C	$I_{th} = I_e$	A	365
at 60 °C	$I_{th} = I_e$	A	350
enclosed	I_{th}	A	300
Notes			At maximum permissible ambient air temperature.
Conventional free air thermal current, 1 pole			
Note			at maximum permissible ambient air temperature
open	I_{th}	A	825
enclosed	I_{th}	A	742
AC-3			
Rated operational current			
Open, 3-pole: 50 – 60 Hz			
220 V 230 V	I_e	A	250
240 V	I_e	A	250
415 V	I_e	A	250
440V	I_e	A	250
500 V	I_e	A	250
660 V 690 V	I_e	A	250
1000 V	I_e	A	76
Motor rating	P	kWh	
220 V 230 V	P	kW	75
240V	P	kW	85
380 V 400 V	P	kW	132
415 V	P	kW	148
440 V	P	kW	132

500 V	P	kW	180
660 V 690 V	P	kW	240
1000 V	P	kW	108
AC-4			
Rated operational current			
Open, 3-pole: 50 – 60 Hz			
220 V 230 V	I_e	A	200
240 V	I_e	A	200
380 V 400 V	I_e	A	200
415 V	I_e	A	200
440 V	I_e	A	200
500 V	I_e	A	200
660 V 690 V	I_e	A	200
1000 V	I_e	A	76
Motor rating	P	kWh	
220 V 230 V	P	kW	62
240 V	P	kW	68
380 V 400 V	P	kW	110
415 V	P	kW	117
440 V	P	kW	125
500 V	P	kW	143
660 V 690 V	P	kW	189
1000 V	P	kW	108

Condensor operation

Individual compensation, rated operational current I_e of three-phase capacitors			
Open			
up to 525 V		A	220
690 V		A	133
Max. inrush current peak		x I_e	30
Component lifespan	Operations	x 10^6	0.1
Max. operating frequency		Ops/h	200

DC

Rated operational current, open			
DC-1			
60 V	I_e	A	300
110 V	I_e	A	300
220 V	I_e	A	300
440 V	I_e	A	11
DC-3			
60 V	I_e	A	300
110 V	I_e	A	300
220 V	I_e	A	300
DC-5			
60 V	I_e	A	300
110 V	I_e	A	300
220 V	I_e	A	300

Current heat loss

3-pole at I_{th}		W	55
Current heat loss at I_e to AC-3/400 V		W	28

Magnet systems

Voltage tolerance			
U_S			24 - 48 V DC
AC operated	Pick-up	x U_S	0.7 x $U_{S\ min}$ - 1.15 x $U_{S\ max}$
DC operated	Pick-up	x U_S	0.7 x $U_{S\ min}$ - 1.15 x $U_{S\ max}$

DC operated	Drop-out	x U_S	0.2 x $U_{S\ max}$ - 0.6 x $U_{S\ min}$
Power consumption of the coil in a cold state and 1.0 x U_c			
Note on power consumption			Control transformer with u_k ≙ 0.6
Pull-in power	Pick-up	VA	380
Pull-in power	Pick-up	W	250
Sealing power	Sealing	VA	5.5
Sealing power	Sealing	W	4.6
Duty factor		% DF	100
Changeover time at 100 % U_C (recommended value)			
Main contacts			
Closing delay		ms	100
Opening delay		ms	110
Behaviour in marginal and transitional conditions			
Sealing			
Voltage interruptions			
(0 … 0.2 x $U_{c\ min}$) ≙ 10 ms			Time is bridged successfully
(0 … 0.2 x $U_{c\ min}$) > 10 ms			Drop-out of the contactor
Voltage drops			
(0.2 … 0.6 x $U_{c\ min}$) ≙ 12 ms			Time is bridged successfully
(0.2 … 0.6 x $U_{c\ min}$) > 12 ms			Drop-out of the contactor
(0.6 … 0.7 x $U_{c\ min}$)			Contactor remains switched on
Excess voltage			
(1.15 … 1.3 x $U_{c\ max}$)			Contactor remains switched on
Pick-up phase			
(0 … 0.7 x $U_{c\ min}$)			Contactor does not switch on
(0.7 x $U_{c\ min}$ … 1.15 x $U_{c\ max}$)			Contactor switches on with certainty
Admissible transitional contact resistance (of the external control circuit device when actuating A11)		mΩ	≙ 500
PLC signal level (A3 - A4) to IEC/EN 61131-2 (type 2)			
High		V	15
Low		V	5

Electromagnetic compatibility (EMC)

Electromagnetic compatibility			This product is designed for operation in industrial environments (environment 2). The use in residential environments (environment 1) could cause electrical interference so that addition suppression must be planned.

Design verification as per IEC/EN 61439

Technical data for design verification			
Rated operational current for specified heat dissipation	I_n	A	250
Heat dissipation per pole, current-dependent	P_{vid}	W	9.33
Equipment heat dissipation, current-dependent	P_{vid}	W	0
Static heat dissipation, non-current-dependent	P_{vs}	W	4.6
Heat dissipation capacity	P_{diss}	W	0
Operating ambient temperature min.		°C	-40
Operating ambient temperature max.		°C	60
IEC/EN 61439 design verification			
10.2 Strength of materials and parts			
10.2.2 Corrosion resistance			Meets the product standard's requirements.
10.2.3.1 Verification of thermal stability of enclosures			Meets the product standard's requirements.
10.2.3.2 Verification of resistance of insulating materials to normal heat			Meets the product standard's requirements.
10.2.3.3 Verification of resistance of insulating materials to abnormal heat and fire due to internal electric effects			Meets the product standard's requirements.
10.2.4 Resistance to ultra-violet (UV) radiation			Meets the product standard's requirements.
10.2.5 Lifting			Does not apply, since the entire switchgear needs to be evaluated.

10.2.6 Mechanical impact			Does not apply, since the entire switchgear needs to be evaluated.
10.2.7 Inscriptions			Meets the product standard's requirements.
10.3 Degree of protection of ASSEMBLIES			Does not apply, since the entire switchgear needs to be evaluated.
10.4 Clearances and creepage distances			Meets the product standard's requirements.
10.5 Protection against electric shock			Does not apply, since the entire switchgear needs to be evaluated.
10.6 Incorporation of switching devices and components			Does not apply, since the entire switchgear needs to be evaluated.
10.7 Internal electrical circuits and connections			Is the panel builder's responsibility.
10.8 Connections for external conductors			Is the panel builder's responsibility.
10.9 Insulation properties			
10.9.2 Power-frequency electric strength			Is the panel builder's responsibility.
10.9.3 Impulse withstand voltage			Is the panel builder's responsibility.
10.9.4 Testing of enclosures made of insulating material			Is the panel builder's responsibility.
10.10 Temperature rise			The panel builder is responsible for the temperature rise calculation. Eaton will provide heat dissipation data for the devices.
10.11 Short-circuit rating			Is the panel builder's responsibility. The specifications for the switchgear must be observed.
10.12 Electromagnetic compatibility			Is the panel builder's responsibility. The specifications for the switchgear must be observed.
10.13 Mechanical function			The device meets the requirements, provided the information in the instruction leaflet (IL) is observed.

Technical data ETIM 6.0

Low-voltage industrial components (EG000017) / Power contactor, AC switching (EC000066)		
Electric engineering, automation, process control engineering / Low-voltage switch technology / Contactor (LV) / Power contactor, AC switching (ecl@ss8.1-27-37-10-03 [AAB718012])		
Rated control supply voltage Us at AC 50HZ	V	0 - 0
Rated control supply voltage Us at AC 60HZ	V	0 - 0
Rated control supply voltage Us at DC	V	24 - 48
Voltage type for actuating		DC
Rated operation current Ie at AC-1, 400 V	A	429
Rated operation current Ie at AC-3, 400 V	A	250
Rated operation power at AC-3, 400 V	kW	132
Rated operation current Ie at AC-4, 400 V	A	200
Rated operation power Ie at AC-4, 400 V	kW	110
Modular version		No
Number of auxiliary contacts as normally open contact		2
Number of auxiliary contacts as normally closed contact		2
Type of electrical connection of main circuit		Rail connection
Number of normally closed contacts as main contact		0
Number of main contacts as normally open contact		3

Approvals

Product Standards		IEC/EN 60947-4-1; UL 508; CSA-C22.2 No. 14-05; CE marking
UL File No.		E29096
UL Category Control No.		NLDX
CSA File No.		1017510
CSA Class No.		3211-04
North America Certification		UL listed, CSA certified
Specially designed for North America		No

Characteristics

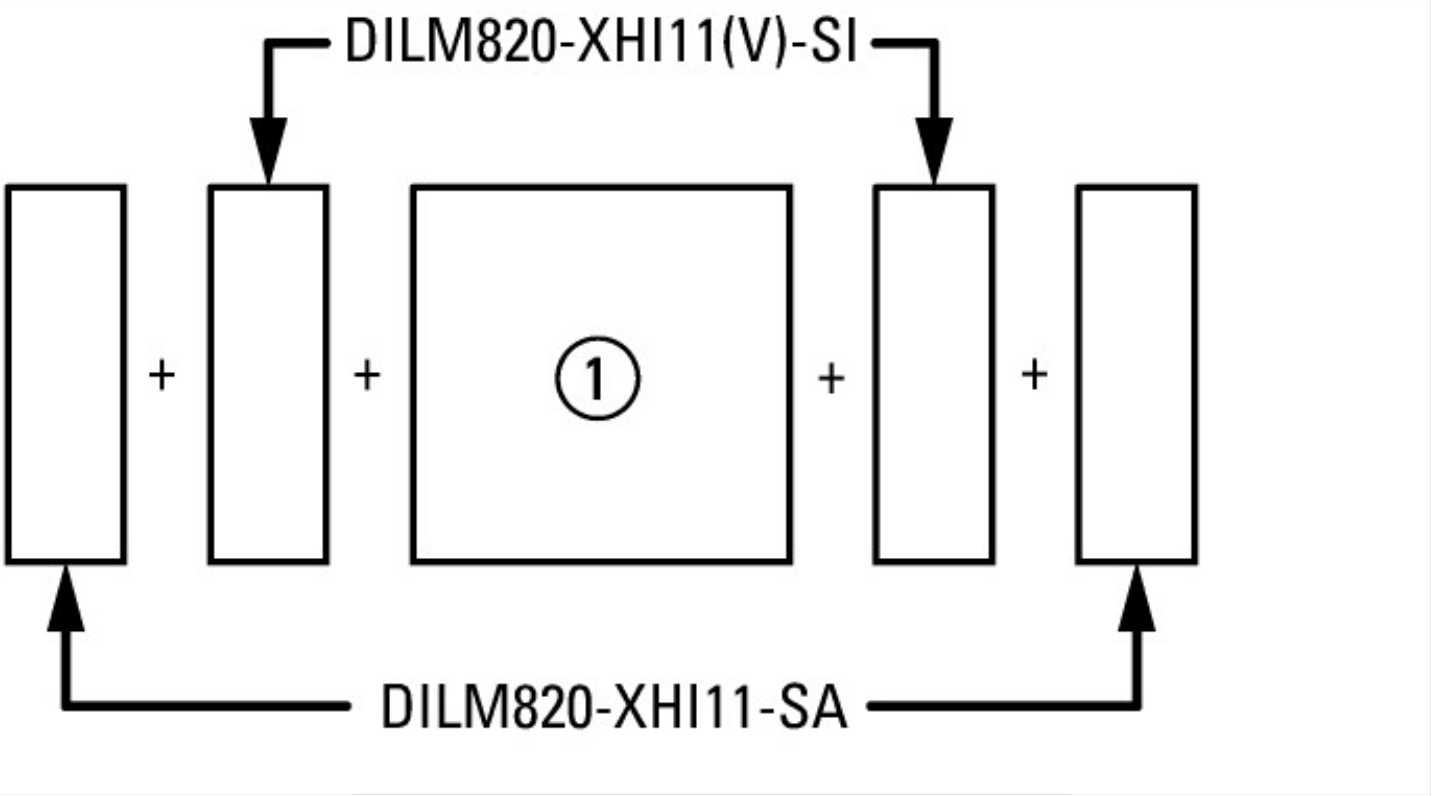

on the side: 2 x DILM820-XHI11(V)-SI; 2 x DILM820-XHI11-SA

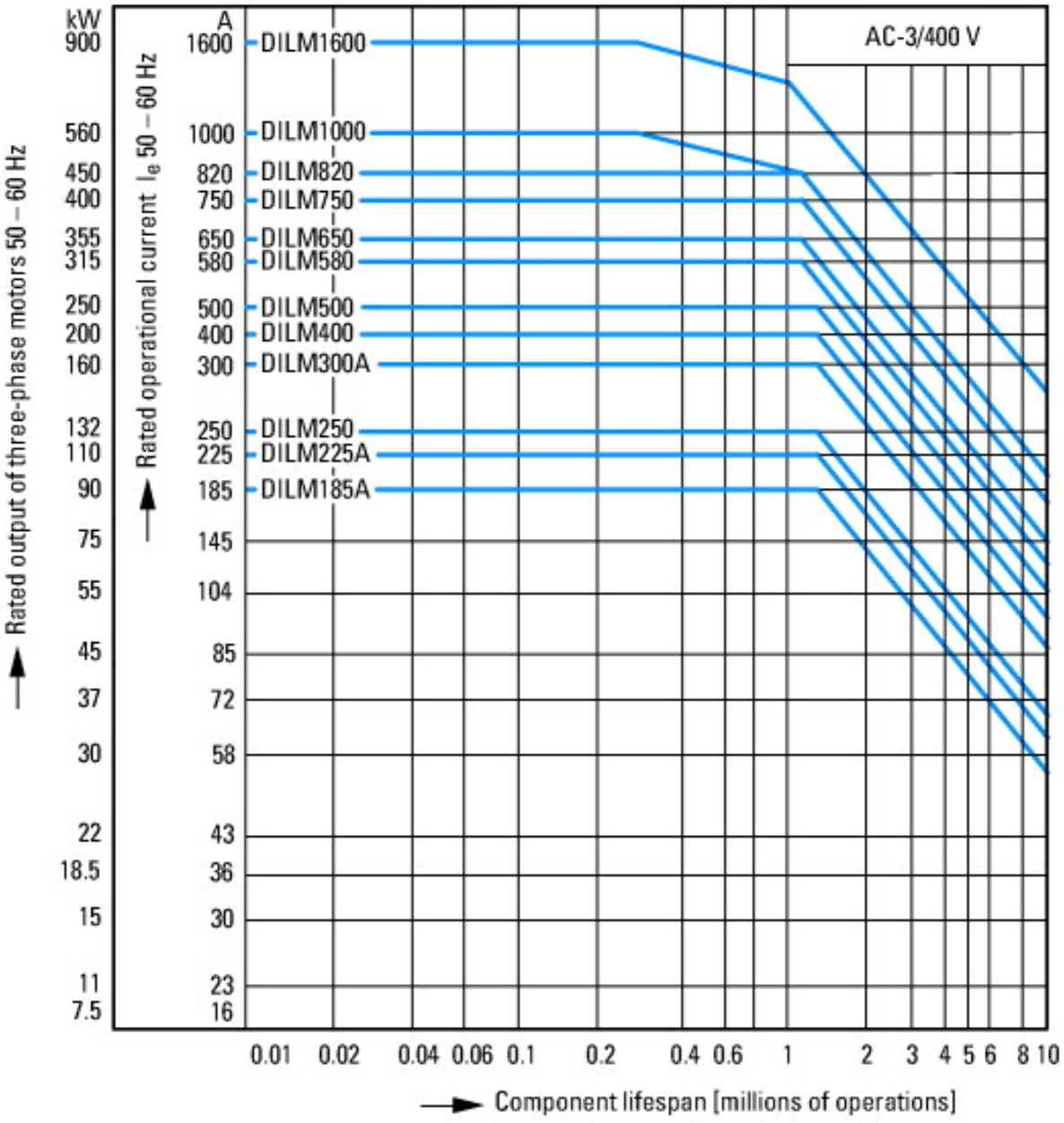

Normal switching duty
Normal AC induction motor
Operating characteristics
Switch on: from stop
Switch off: during run
Electrical characteristics:
Switch on: up to 6 x Rated motor current
Switch off: up to 1 x Rated motor current
Utility category
100 % AC-3
Typical Applications
Compressors
Lifts
Mixers
Pumps
Escalators
Agitators
fan
Conveyor belts
Centrifuges
Hinged flaps
Bucket-elevator
Air-conditioning systems
General drives for manufacturing and processing machines

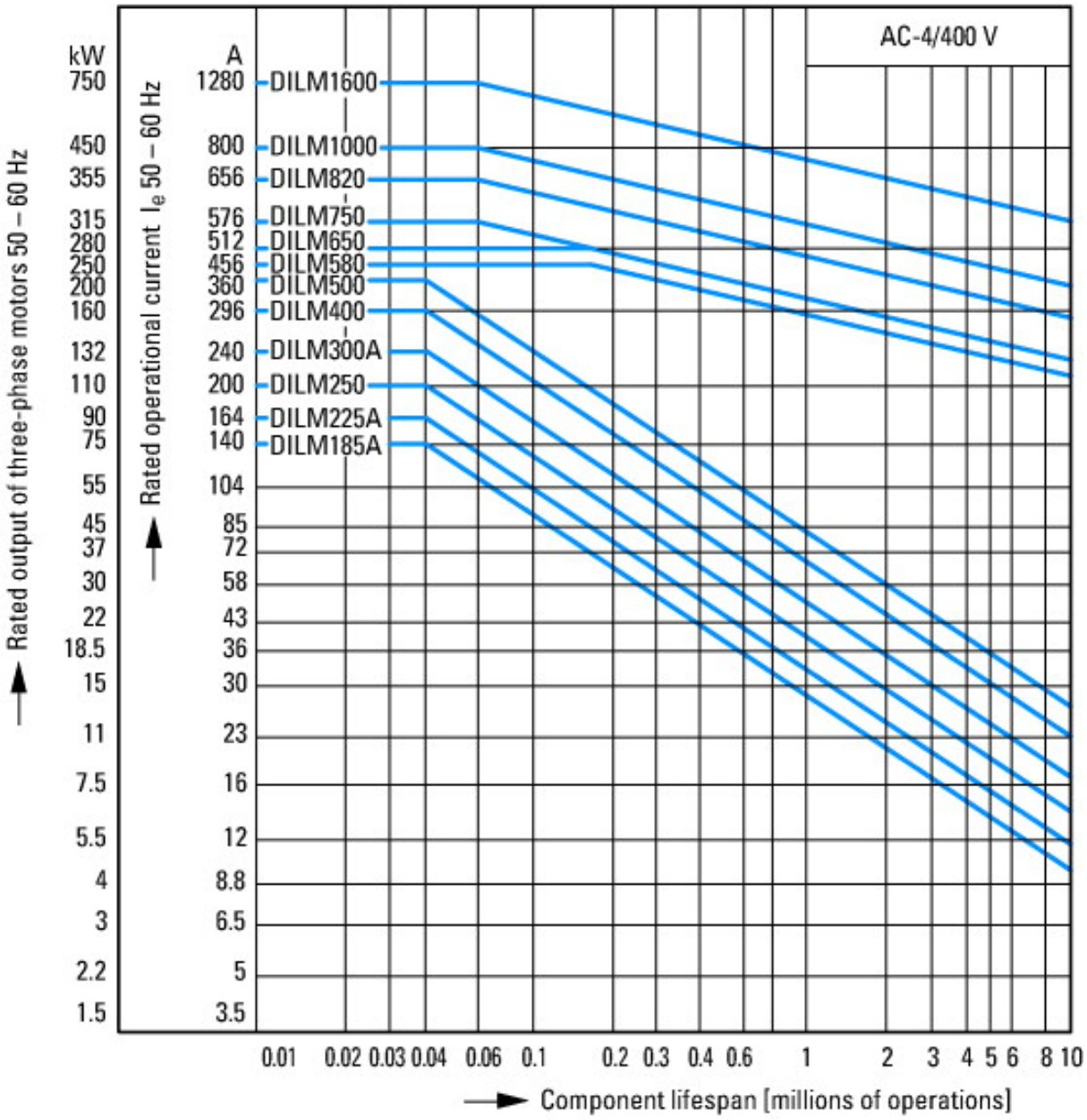

Extreme switching duty
Squirrel-cage motor
Operating characteristics
Inching, plugging, reversing
Electrical characteristics
Make: up to 6 x rated motor current
Break: up to 6 x rated motor current
Utilization category
100 % AC-4
Typical applications
Printing presses
Wire-drawing machines
Centrifuges
Special drives for manufacturing and processing machines

Switching duty for non-motor loads, 3-pole, 4-pole
Operating characteristics
Non-inductive or slightly inductive loads
Electrical characteristics
Make: 1 x rated current
Break: 1 x rated current
Utilization category
100 % AC-1
Typical applications
Electric heat

Short-time loading, 3-pole
Time interval between two loading cycles: 15 minutes

Dimensions

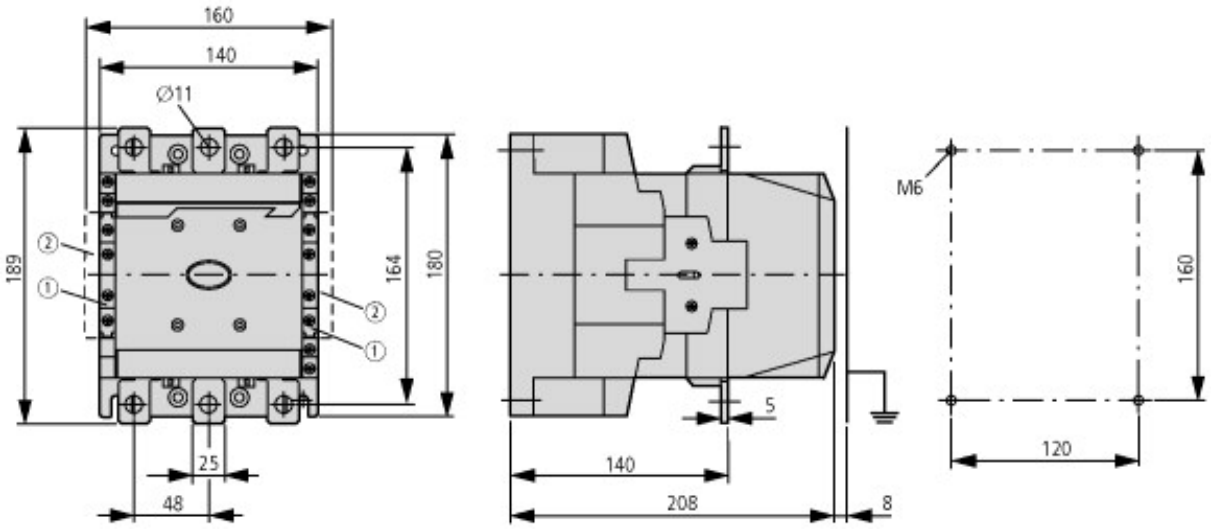

① DILM820-XHI11(V)-SI

② DILM820-XHI11-SA

Additional product information (links)

IL03406002Z (AWA2100-1639) Contactors >170 A	
IL03406002Z (AWA2100-1639) Contactors >170 A	ftp://ftp.moeller.net/DOCUMENTATION/AWA_INSTRUCTIONS/IL03406002Z2012_09.pdf
IL03406005Z (AWA2100-2212) Contactors >170 A	
IL03406005Z (AWA2100-2212) Contactors >170 A	ftp://ftp.moeller.net/DOCUMENTATION/AWA_INSTRUCTIONS/IL03406005Z2010_07.pdf
UL/CSA: Approved rating data	http://de.ecat.moeller.net/flip-cat/?edition=HPLTE&startpage=5.84
UL/CSA: UL/CSA: Short Circuit Current Rating (SCCR)	http://de.ecat.moeller.net/flip-cat/?edition=HPLTE&startpage=5.86
Switchgear of Power Factor Correction Systems	http://www.moeller.net/binary/ver_techpapers/ver934en.pdf
X-Start - Modern Switching Installations Efficiently Fitted and Wired Securely	http://www.moeller.net/binary/ver_techpapers/ver938en.pdf
Mirror Contacts for Highly-Reliable Information Relating to Safety-Related Control Functions	http://www.moeller.net/binary/ver_techpapers/ver944en.pdf
Effect of the Cabel Capacitance of Long Control Cables on the Actuation of Contactors	http://www.moeller.net/binary/ver_techpapers/ver949en.pdf
Motor starters and "Special Purpose Ratings" for the North American market	http://www.moeller.net/binary/ver_techpapers/ver953en.pdf
Switchgear for Luminaires	http://www.moeller.net/binary/ver_techpapers/ver955en.pdf
Standard Compliant and Functionally Safe Engineering Design with Mechanical Auxiliary Contacts	http://www.moeller.net/binary/ver_techpapers/ver956en.pdf
The Interaction of Contactors with PLCs	http://www.moeller.net/binary/ver_techpapers/ver957en.pdf
Busbar Component Adapters for modern Industrial control panels	http://www.moeller.net/binary/ver_techpapers/ver960en.pdf

© 09/2016 by Eaton Industries GmbH