

Switch-disconnector, 3 pole, 160 A, With red rotary handle and yellow locking ring, surface mounting, in CI-K5 enclosure

Part no. DMM-160/3/I5/P-R
Article no. 172794

Powering Business Worldwide

Delivery programme

Product range			Switch-disconnector Main switch maintenance switch
Part group reference			DMM
Stop Function			Emergency switching off function
			With red rotary handle and yellow locking ring
Notes			in CI-K5 enclosure
Information about equipment supplied			auxiliary contact fitted by user.
Number of poles			3 pole
Auxiliary contacts			
		N/O	0
		N/C	0
Notes			1 padlock, ⌀ 5 mm
Locking facility			Lockable in the 0 (Off) position
Degree of Protection			IP65
Design			surface mounting
			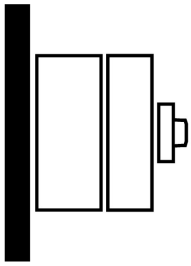
Contact sequence			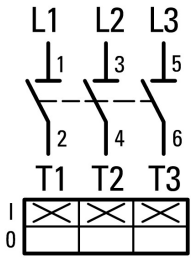
Motor rating AC-23A, 50 - 60 Hz			
400 V	P	kW	80
Rated uninterrupted current	I_u	A	160

Technical data

General

Standards			IEC/EN 60947, VDE 0660, IEC/EN 60204, Switch-disconnector according to IEC/EN 60947-3
Certifications			CE, RoHs, KEMA, GOST-R, Lloyds
Ambient temperature			
Operation	ϑ	°C	-25 - +60
Storage	ϑ	°C	-40 - +80

Overvoltage category/pollution degree			III/3
Rated impulse withstand voltage	U_{imp}	kV	6
Rated insulation voltage	U_i	V	1000
Mounting position			As required
Protection against direct contact when actuated from front (EN 50274)			Finger and back-of-hand proof

Contacts

Mechanical variables			
Number of poles			3 pole
Auxiliary contacts			
		N/O	0
		N/C	0
Electrical characteristics			
Rated operational voltage	U_e	V AC	690
Rated uninterrupted current	I_u	A	160
Note on rated uninterrupted current I_u			Rated uninterrupted current Iu is specified for max. cross-section.
Short-circuit rating			
fuse			160
Rated conditional short-circuit current	Iq	kA	415 V: 30 690 V: 50
Breaking current		kA	13.5
max. let-through energy		kA^2s	86,9
Rated short-time withstand current (1 s current)	I_{cw}	A_{rms}	2500
Note on rated short-time withstand current Icw			Current for a time of 1 second

Switching capacity

Rated breaking capacity cos φ to IEC 60947-3		A	
400/415 V		A	1080
500 V		A	528
690 V		A	336
Safe isolation to EN 61140			
Current heat loss per contact at I_e		W	7.4
Lifespan, mechanical	Operations		10000
AC			
AC-21A			
Rated operational current switch			
400 V 415 V	I_e	A	160
500 V	I_e	A	160
690 V	I_e	A	160
AC-22A			
Rated operational current switch			
400 V 415 V	I_e	A	160
500 V	I_e	A	160
690 V	I_e	A	160
AC-23A			
Rated operational current switch			
400 V 415 V	I_e	A	140
500 V	I_e	A	66
690 V	I_e	A	42
Motor rating AC-23A, 50 - 60 Hz	P	kW	
400 V 415 V	P	kW	80
500 V	P	kW	45
690 V	P	kW	37

Terminal capacities

Flexible with ferrules to DIN 46228		mm^2	
flexible		mm^2	6 - 70
Max. tightening torque		Nm	7

Technical safety parameters:

Notes			$B10_d$ values as per EN ISO 13849-1, table C1

Design verification as per IEC/EN 61439

Technical data for design verification			
Operating ambient temperature min.		°C	-25
Operating ambient temperature max.		°C	60

Technical data ETIM 6.0

Low-voltage industrial components (EG000017) / Switch disconnector (EC000216)			
Electric engineering, automation, process control engineering / Low-voltage switch technology / Off-load switch, circuit breaker, control switch / Switch disconnector (ecl@ss8.1-27-37-14-03 [AKF060010])			
Version as main switch			Yes
Version as maintenance-/service switch			Yes
Version as safety switch			No
Version as emergency stop installation			Yes
Version as reversing switch			No
Max. rated operation voltage Ue AC		V	690
Rated operating voltage		V	690 - 690
Rated permanent current Iu		A	160
Rated permanent current at AC-21, 400 V		A	160
Rated operation power at AC-3, 400 V		kW	0
Rated short-time withstand current Icw		kA	2.5
Rated operation power at AC-23, 400 V		kW	0
Switching power at 400 V		kW	0
Conditioned rated short-circuit current Iq		kA	50
Number of poles			3
Number of auxiliary contacts as normally closed contact			0
Number of auxiliary contacts as normally open contact			0
Number of auxiliary contacts as change-over contact			0
Motor drive optional			No
Motor drive integrated			No
Voltage release optional			No
Device construction			Complete device in housing
Suitable for ground mounting			Yes
Suitable for front mounting 4-hole			No
Suitable for front mounting center			No
Suitable for distribution board installation			No
Suitable for intermediate mounting			No
Colour control element			Red
Type of control element			Short thumb-grip
Interlockable			Yes
Type of electrical connection of main circuit			Screw connection
Degree of protection (IP), front side			IP65

Dimensions

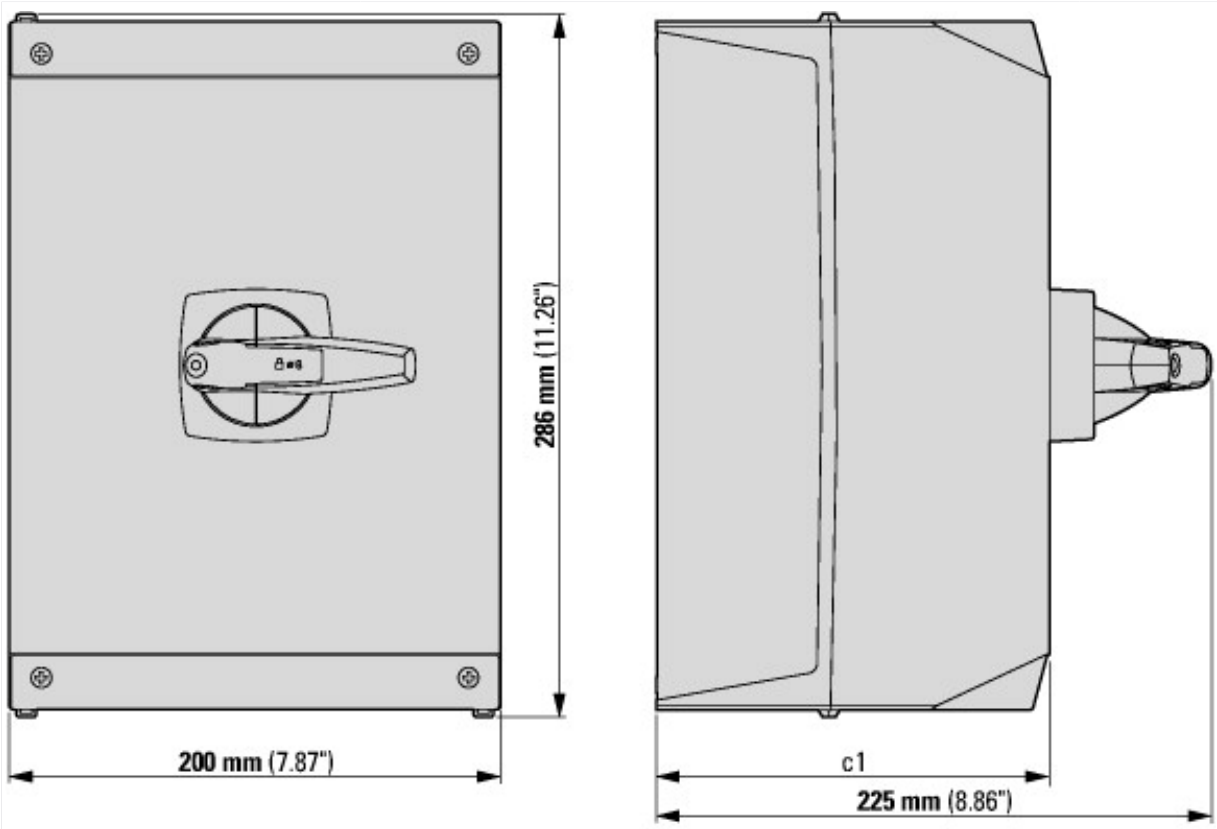

Additional product information (links)

IL008006Z Switch-disconnectors	
IL008006Z Switch-disconnectors	ftp://ftp.moeller.net/DOCUMENTATION/AWA_INSTRUCTIONS/IL008006ZU2014_02.pdf

© 09/2016 by Eaton Industries GmbH