

# Switch-disconnector, 3 pole + N, 125 A, With red rotary handle and yellow locking ring, surface mounting, in CI-K5 enclosure

**Part no.** DMM-125/3N/I5/P-R
**Article no.** 172848

Powering Business Worldwide

## Delivery programme

| | | | |
|---|---|---|---|
| Product range | | | Switch-disconnector<br>Main switch<br>maintenance switch |
| Part group reference | | | DMM |
| Stop Function | | | Emergency switching off function |
| | | | With red rotary handle and yellow locking ring |
| Notes | | | in CI-K5 enclosure |
| Information about equipment supplied | | | auxiliary contact fitted by user. |
| Number of poles | | | 3 pole + N |
| **Auxiliary contacts** | | | |
|  | | N/O | 0 |
|  | | N/C | 0 |
| Notes | | | 1 padlock, ∅ 5 mm |
| Locking facility | | | Lockable in the 0 (Off) position |
| Degree of Protection | | | IP65 |
| Design | | | surface mounting |
| | | | 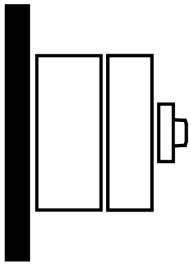 |
| Contact sequence | | | 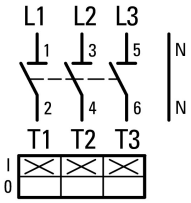 |
| **Motor rating AC-23A, 50 - 60 Hz** | | | |
| 400 V | P | kW | 59 |
| Rated uninterrupted current | $I_u$ | A | 125 |

## Technical data

### General

| | | | |
|---|---|---|---|
| Standards | | | IEC/EN 60947, VDE 0660, IEC/EN 60204,<br>Switch-disconnector according to IEC/EN 60947-3 |
| Certifications | | | CE, RoHs, KEMA, GOST-R, Lloyds |
| Ambient temperature | | | |
| Operation | ϑ | °C | -25 - +60 |
| Storage | ϑ | °C | -40 - +80 |
| Overvoltage category/pollution degree | | | III/3 |
| Rated impulse withstand voltage | $U_{imp}$ | kV | 6 |

| | | | |
|---|---|---|---|
| Rated insulation voltage | $U_i$ | V | 1000 |
| Mounting position | | | As required |
| Protection against direct contact when actuated from front (EN 50274) | | | Finger and back-of-hand proof |

## Contacts

| | | | |
|---|---|---|---|
| Mechanical variables | | | |
| Number of poles | | | 3 pole + N |
| Auxiliary contacts | | | |
| | | N/O | 0 |
| | | N/C | 0 |
| Electrical characteristics | | | |
| Rated operational voltage | $U_e$ | V AC | 690 |
| Rated uninterrupted current | $I_u$ | A | 125 |
| Note on rated uninterrupted current $!_u$ | | | Rated uninterrupted current Iu is specified for max. cross-section. |
| Short-circuit rating | | | |
| fuse | | | 125 |
| Rated conditional short-circuit current | Iq | kA | 415 V: 30<br>690 V: 50 |
| Breaking current | | kA | 13.7 |
| max. let-through energy | | $kA^2s$ | 134 |
| Rated short-time withstand current (1 s current) | $I_{cw}$ | $A_{rms}$ | 2500 |
| Note on rated short-time withstand current Icw | | | Current for a time of 1 second |

## Switching capacity

| | | | |
|---|---|---|---|
| Rated breaking capacity cos φ to IEC 60947-3 | | A | |
| 400/415 V | | A | 1000 |
| 500 V | | A | 528 |
| 690 V | | A | 336 |
| Safe isolation to EN 61140 | | | |
| Current heat loss per contact at $I_e$ | | W | 4.5 |
| Lifespan, mechanical | Operations | | 10000 |
| AC | | | |
| AC-21A | | | |
| Rated operational current switch | | | |
| 400 V 415 V | $I_e$ | A | 125 |
| 500 V | $I_e$ | A | 125 |
| 690 V | $I_e$ | A | 125 |
| AC-22A | | | |
| Rated operational current switch | | | |
| 400 V 415 V | $I_e$ | A | 125 |
| 500 V | $I_e$ | A | 125 |
| 690 V | $I_e$ | A | 125 |
| AC-23A | | | |
| Rated operational current switch | | | |
| 400 V 415 V | $I_e$ | A | 125 |
| 500 V | $I_e$ | A | 66 |
| 690 V | $I_e$ | A | 42 |
| Motor rating AC-23A, 50 - 60 Hz | P | kW | |
| 400 V 415 V | P | kW | 59 |
| 500 V | P | kW | 45 |
| 690 V | P | kW | 37 |

## Terminal capacities

| | | | |
|---|---|---|---|
| Flexible with ferrules to DIN 46228 | | $mm^2$ | |
| flexible | | $mm^2$ | 6 - 70 |
| Max. tightening torque | | Nm | 7 |

## Technical safety parameters:

| | | | |
|---|---|---|---|
| **Notes** | | | $B10_d$ values as per EN ISO 13849-1, table C1 |

## Design verification as per IEC/EN 61439

| | | |
|---|---|---|
| Technical data for design verification | | |
| Operating ambient temperature min. | °C | -25 |
| Operating ambient temperature max. | °C | 60 |

## Technical data ETIM 6.0

| | | |
|---|---|---|
| Low-voltage industrial components (EG000017) / Switch disconnector (EC000216) | | |
| Electric engineering, automation, process control engineering / Low-voltage switch technology / Off-load switch, circuit breaker, control switch / Switch disconnector (ecl@ss8.1-27-37-14-03 [AKF060010]) | | |
| Version as main switch | | Yes |
| Version as maintenance-/service switch | | Yes |
| Version as safety switch | | No |
| Version as emergency stop installation | | Yes |
| Version as reversing switch | | No |
| Max. rated operation voltage Ue AC | V | 690 |
| Rated operating voltage | V | 690 - 690 |
| Rated permanent current Iu | A | 125 |
| Rated permanent current at AC-21, 400 V | A | 125 |
| Rated operation power at AC-3, 400 V | kW | 0 |
| Rated short-time withstand current Icw | kA | 2.5 |
| Rated operation power at AC-23, 400 V | kW | 0 |
| Switching power at 400 V | kW | 0 |
| Conditioned rated short-circuit current Iq | kA | 50 |
| Number of poles | | 3 |
| Number of auxiliary contacts as normally closed contact | | 0 |
| Number of auxiliary contacts as normally open contact | | 0 |
| Number of auxiliary contacts as change-over contact | | 0 |
| Motor drive optional | | No |
| Motor drive integrated | | No |
| Voltage release optional | | No |
| Device construction | | Complete device in housing |
| Suitable for ground mounting | | Yes |
| Suitable for front mounting 4-hole | | No |
| Suitable for front mounting center | | No |
| Suitable for distribution board installation | | No |
| Suitable for intermediate mounting | | No |
| Colour control element | | Red |
| Type of control element | | Short thumb-grip |
| Interlockable | | Yes |
| Type of electrical connection of main circuit | | Screw connection |
| Degree of protection (IP), front side | | IP65 |

## Dimensions

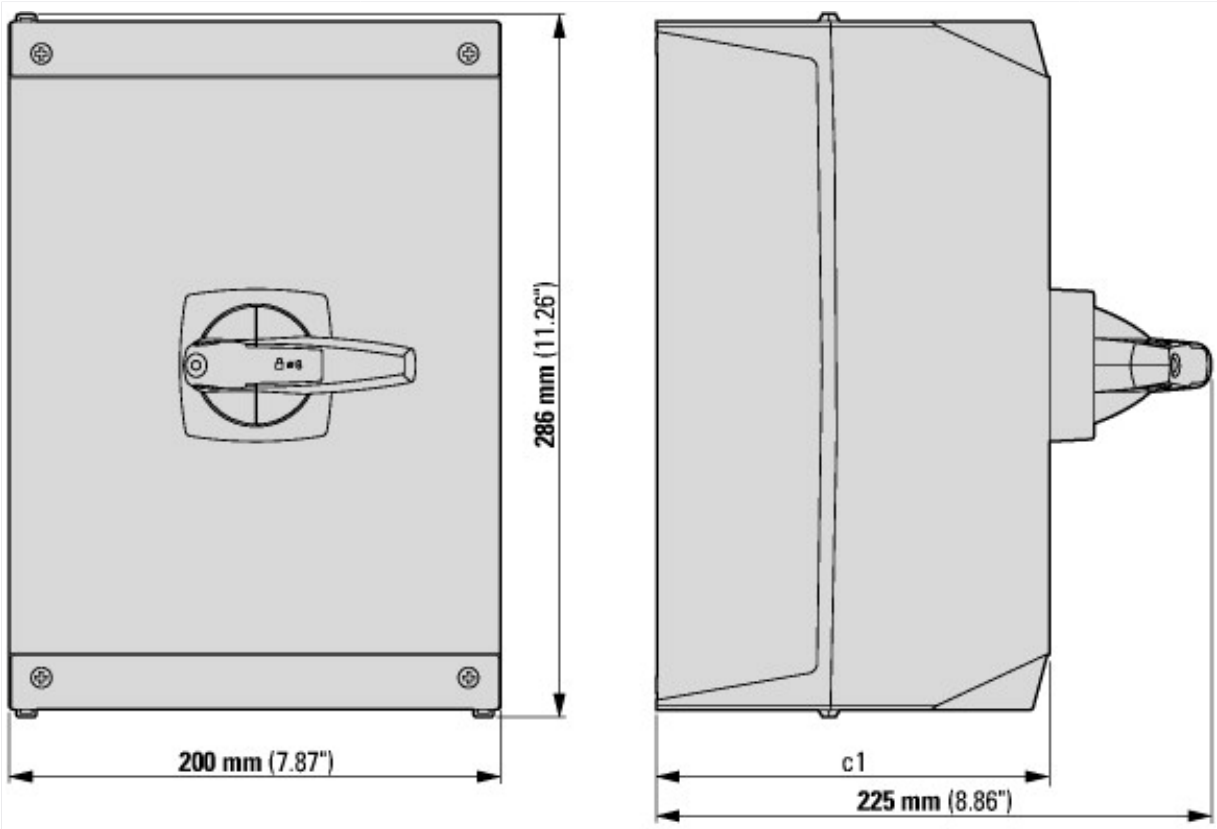


## Additional product information (links)

| **IL008006Z Switch-disconnectors** | |
|---|---|
| IL008006Z Switch-disconnectors | ftp://ftp.moeller.net/DOCUMENTATION/AWA_INSTRUCTIONS/IL008006ZU2014_02.pdf |


© 09/2016 by Eaton Industries GmbH