

Residual current circuit breaker (RCCB), 40A, 4p, 30mA, type A

Part no. FRCMM-40/4/003-A
Article no. 170333
Catalog No. FRCMM-40/4/003-A

Powering Business Worldwide

Similar to illustration

Delivery programme

Basic function			Residual current circuit breakers
Number of poles			4 pole
Application			Switchgear for industrial and advanced commercial applications
Rated current	I_n	A	40
Rated short-circuit strength	I_{cn}	kA	10 with back-up fuse
Rated fault current	$I_{\Delta N}$	A	0.03
Type			Type A
Tripping		A	non-delayed
Product range			FRCmM
Sensitivity			Pulse-current sensitive
Impulse withstand current			Partly surge-proof 250 A
Contact sequence			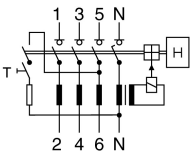

Technical data

Electrical

Types conform to			IEC/EN 61008
Current test marks			As per inscription
Tripping		A	non-delayed
Rated operating voltage	U_n	V AC	240/415
Rated frequency	f	Hz	50
Limit values of the operating voltage			
Test circuit		V AC	196 - 264
Rated fault current	$I_{\Delta n}$	mA	30
Sensitivity			Pulse-current sensitive
Rated insulation voltage	U_i	V	440
Rated impulse withstand voltage	U_{imp}	kV	4 (1.2/50µs)
Rated short-circuit strength	I_{cn}	kA	10 with back-up fuse
Impulse withstand current			250 A (8/20 µs) surge-proof
Max. admissible back-up fuse			
Short-circuit	gG/gL	A	40
Overload	gG/gL	A	40
Rated making and breaking capacity / Rated residual making and breaking capacity	I_m / $I_{\Delta m}$	A	500
lifespan			
Electrical		Operations	2000
Mechanical		Operations	10000

Mechanical

Standard front dimension		mm	45
Device height		mm	80
Built-in width		mm	70 (4TE)
Mounting			Quick attachment with 2 latch positions for DIN-rail IEC/EN 60715
Degree of Protection			IP20 switches IP 40 enclosed

Terminals top and bottom			Twin-purpose terminals
Terminal protection			Busbar tag shroud to BGV A3, ÖVE-EN 6
Terminal cross-section			
Solid		mm^2	1.5 - 35
Stranded		mm^2	2 x 16
Terminal cross-section			M5 (with cross-recessed screw as defined in EN ISO 4757-Z2, Pozidriv PZ2)
Tightening torque of fixing screws		N/m	2 - 2.4
Thickness of busbar material		mm	0.8 - 2
Admissible ambient temperature range		°C	-25 - +40
Permissible storage and transport temperatures		°C	-35 - +60
Climatic proofing			according to IEC/EN 61008
Mounting position			As required
Contact position indicator			red / green
Trip indication			white / blue

Design verification as per IEC/EN 61439

Technical data for design verification			
Rated operational current for specified heat dissipation	I_n	A	40
Heat dissipation per pole, current-dependent	P_{vid}	W	0
Equipment heat dissipation, current-dependent	P_{vid}	W	13.1
Static heat dissipation, non-current-dependent	P_{vs}	W	0
Heat dissipation capacity	P_{diss}	W	0
Operating ambient temperature min.		°C	-25
Operating ambient temperature max.		°C	55
			Starting at 40 °C, the max. permissible continuous current decreases by 3% for every 1 °C

Technical data ETIM 6.0

Circuit breakers and fuses (EG000020) / Residual current circuit breaker (RCCB) (EC000003)			
Electric engineering, automation, process control engineering / Electrical installation, device / Residual current protection system / Residual current circuit breaker (RCCB) (ecl@ss8.1-27-14-22-01 [AAB906011])			
Number of poles			4
Nominal rated voltage		V	415
Nominal rated current		A	40
Rated fault current		A	0.03
Mounting method			DIN rail
Leakage current type			A
Selective protection			No
Short-circuit breaking capacity (Icw)		kA	10
Surge current capacity		kA	0.25
Frequency			50 Hz
Additional equipment possible			Yes
Degree of protection (IP)			IP20
Construction size (in accordance with DIN 43880)			1
Width in number of modular spacings			4
Built-in depth		mm	70.5
Short-time delayed tripping			No

Dimensions

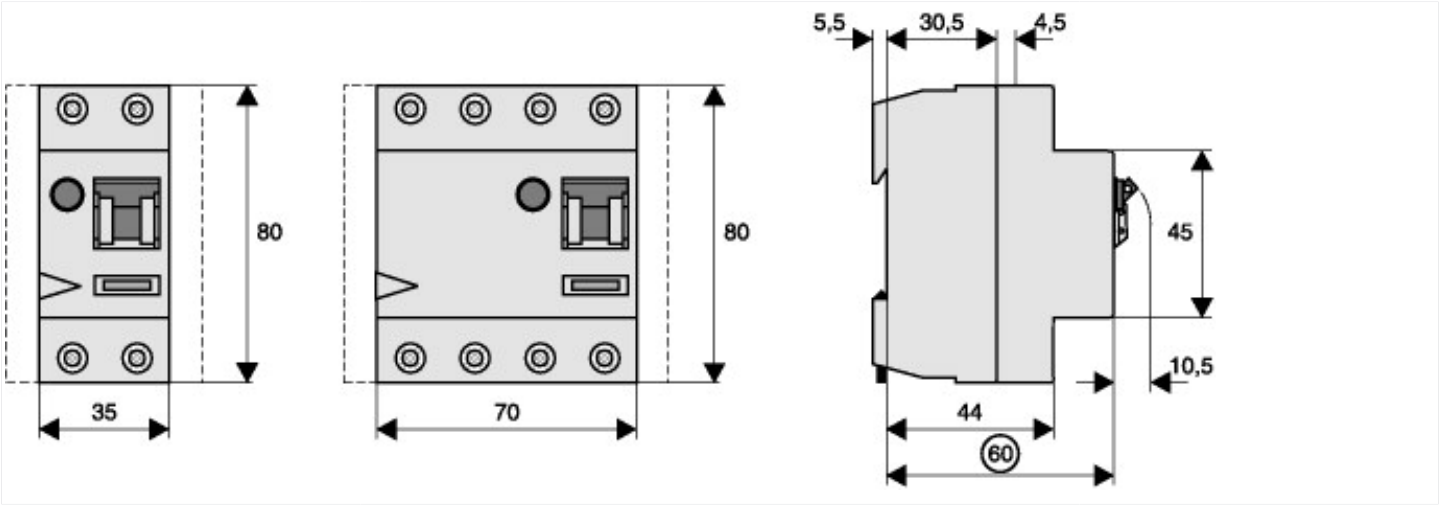

© 09/2016 by Eaton Industries GmbH