

Residual current circuit breaker (RCCB), 40A, 4p, 30mA, type U

Part no. FRCMM-40/4/003-U
Article no. 170454
Catalog No. FRCMM-40/4/003-U

Powering Business Worldwide

Similar to illustration

Delivery programme

Basic function			Residual current circuit breakers
Number of poles			4 pole
Application			Residual current circuit-breaker - frequency converter-proof
Rated current	I_n	A	40
Rated short-circuit strength	I_{cn}	kA	10 with back-up fuse
Rated fault current	$I_{\Delta N}$	A	0.03
Type			Type U
Tripping		A	Short time-delayed
Product range			FRCmM
Sensitivity			Pulse-current sensitive
Impulse withstand current			Surge-proof, 3 kA
Contact sequence			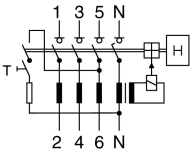

Technical data

Electrical

Types conform to			IEC/EN 61008
Current test marks			As per inscription
Tripping		A	10 ms delayed
Rated operating voltage	U_n	V AC	240/415
Rated frequency	f	Hz	50
Limit values of the operating voltage			
Test circuit		V AC	196 - 264
Rated fault current	$I_{\Delta n}$	mA	30
Sensitivity			Pulse-current sensitive
Enhanced sensitivity			Suitable for variable frequency drives
Rated insulation voltage	U_i	V	440
Rated impulse withstand voltage	U_{imp}	kV	4 (1.2/50µs)
Rated short-circuit strength	I_{cn}	kA	10 with back-up fuse
Impulse withstand current			3 kA (8/20 µs) surge-proof
Max. admissible back-up fuse			
Short-circuit	gG/gL	A	40
Overload	gG/gL	A	40
Rated making and breaking capacity / Rated residual making and breaking capacity	I_m / $I_{\Delta m}$	A	500
lifespan			
Electrical		Operations	2000
Mechanical		Operations	10000

Mechanical

Standard front dimension		mm	45
Device height		mm	80
Built-in width		mm	70 (4TE)
Mounting			Quick attachment with 2 latch positions for DIN-rail IEC/EN 60715
Degree of Protection			IP20 switches

		IP 40 enclosed
Terminals top and bottom		Twin-purpose terminals
Terminal protection		Busbar tag shroud to BGV A3, ÖVE-EN 6
Terminal cross-section		
Solid	mm^2	1.5 - 35
Stranded	mm^2	2 x 16
Terminal cross-section		M5 (with cross-recessed screw as defined in EN ISO 4757-Z2, Pozidriv PZ2)
Tightening torque of fixing screws	N/m	2 - 2.4
Thickness of busbar material	mm	0.8 - 2
Admissible ambient temperature range	°C	-25 - +40
Permissible storage and transport temperatures	°C	-35 - +60
Climatic proofing		according to IEC/EN 61008
Mounting position		As required
Contact position indicator		red / green
Trip indication		white / blue

Design verification as per IEC/EN 61439

Technical data for design verification		
Operating ambient temperature min.	°C	-25
Operating ambient temperature max.	°C	40

Technical data ETIM 6.0

Circuit breakers and fuses (EG000020) / Residual current circuit breaker (RCCB) (EC000003)		
Electric engineering, automation, process control engineering / Electrical installation, device / Residual current protection system / Residual current circuit breaker (RCCB) (ecl@ss8.1-27-14-22-01 [AAB906011])		
Number of poles		4
Nominal rated voltage	V	415
Nominal rated current	A	40
Rated fault current	A	0.03
Mounting method		DIN rail
Leakage current type		A
Selective protection		No
Short-circuit breaking capacity (Icw)	kA	10
Surge current capacity	kA	3
Frequency		50 Hz
Additional equipment possible		Yes
Degree of protection (IP)		IP20
Construction size (in accordance with DIN 43880)		1
Width in number of modular spacings		4
Built-in depth	mm	70.5
Short-time delayed tripping		Yes

Dimensions

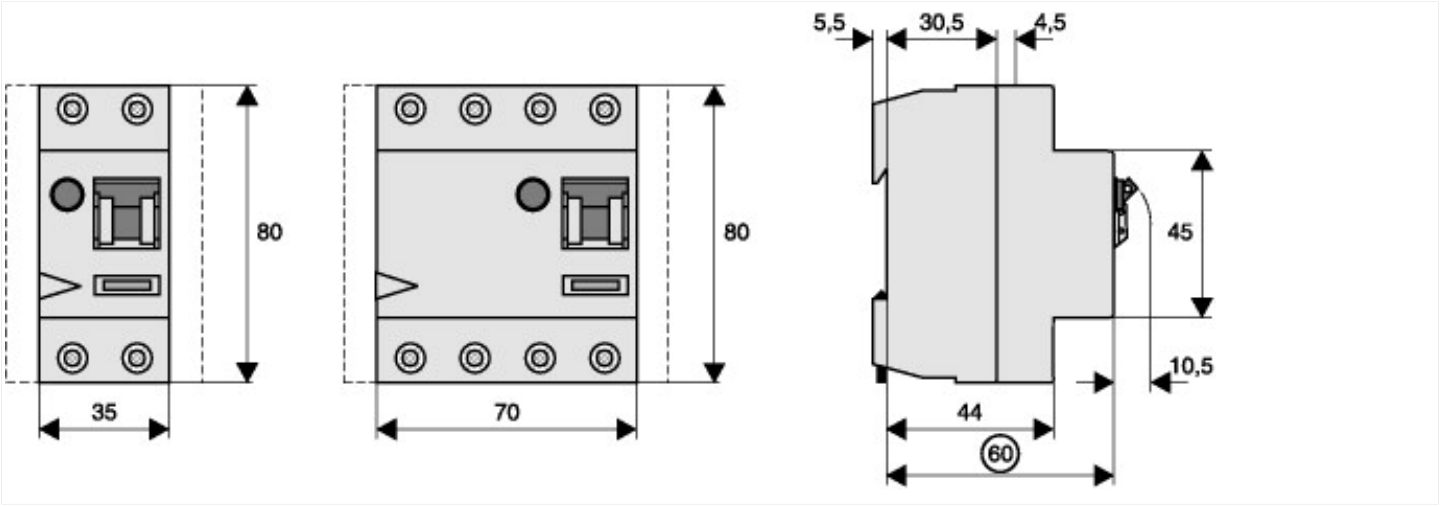

© 09/2016 by Eaton Industries GmbH