SIEMENS

Show actual product details

Data sheet 3LD2766-0TB51



SENTRON, 3LD switch disconnector, main switch, 3-pole, Iu:100 A, Operational power / at AC-23 A at 400 V: 37 kW, molded-plastic enclosure for metric threaded joint, rotary operating mechanism, black

Model		
product brandname		SENTRON
Type of the driving mechanism / motor drive		No
General technical data		
Number of poles		3
Number of poles / Note		N + PE
Type of device		fixed mounting
Operating frequency / maximum	1/h	50
Voltage		
Insulation voltage / rated value	V	690
Surge voltage resistance / rated value	kV	6
Protection class		
Protection class IP / on the front		IP65
Dissipation		
Power loss [W]		
• for rated value of the current / at AC / in hot operating state / per pole	W	7.5

Subject to change without notice
© Copyright Siemens AG

Electricity		
Continuous current / rated value	A	100
Short-time current resistance (Icw) / at 690 V / limited to 1 s / rated value	A	2 000

Main circuit		
Operating frequency		
• initial value	Hz	50
• Full-scale value	Hz	60
Operating power		
• at AC-23 A / at 400 V / rated value	kW	37
• at AC-23 A / at 690 V / rated value	kW	30
• at AC-3 / at 400 V / rated value	kW	30
• at AC-3 / at 690 V / rated value	kW	22
Operating voltage		
• at AC / at 50/60 Hz / rated value	V	690

Auxiliary circuit		
Operating voltage / of auxiliary contacts / at AC / maximum	V	500
Continuous current / of the auxiliary contact / rated value	A	10
Insulation voltage / of the auxiliary switch / rated value	V	500

Suitability		
Suitability for use		
• Main switch		Yes
• switch disconnector		Yes
• EMERGENCY OFF switch		No
• safety switch		Yes
• maintenance/repair switch		Yes

Product details		
Product feature / interlock		Yes
Product extension / optional		
• motor drive		No
• Voltage trigger		No

Connections		
Type of electrical connection		
• for auxiliary contacts		connection terminals

Requirements		
Design of the fuse link		

Subject to change without notice
© Copyright Siemens AG

• for short-circuit protection of the main circuit / required		fuse gL/gG: 100 A
• for short-circuit protection of the auxiliary switch / required		fuse gL/gG: 10 A

Mechanical Design

Height	mm	302
Width	mm	212
Depth	mm	181
Mounting type		
• front mounting with 4-hole attachment		No
• front mounting with central attachment		Yes
• rail mounting		No
Net weight	g	1 886

Environmental conditions

Ambient temperature		
• during operation / minimum	°C	-25
• during operation / maximum	°C	55

Certificates

Equipment marking		
• acc. to DIN EN 61346-2		S
• acc. to DIN EN 81346-2		SF

General Product Approval					Declaration of Conformity
CCC	CSA	UL	VDE	sonstig	EG-Konf.

Test Certificates	Shipping Approval	other
spezielle Prüfbescheinigungen	LRS	Umweltbestätigung

Further information

Information- and Downloadcenter (Catalogs, Brochures,…)
http://www.siemens.com/lowvoltage/catalogs

Industry Mall (Online ordering system)
https://eb.automation.siemens.com/mall/en/WW/Catalog/Product/3LD2766-0TB51

Service&Support (Manuals, Certificates, Characteristics, FAQs,...)
http://support.automation.siemens.com/WW/view/en/3LD2766-0TB51/all

Subject to change without notice
© Copyright Siemens AG

Image database (product images, 2D dimension drawings, 3D models, device circuit diagrams, ...)
http://www.automation.siemens.com/bilddb/cax_en.aspx?mlfb=3LD2766-0TB51

CAx-Online-Generator
http://www.siemens.com/cax

Tender specifications
http://www.siemens.com/specifications

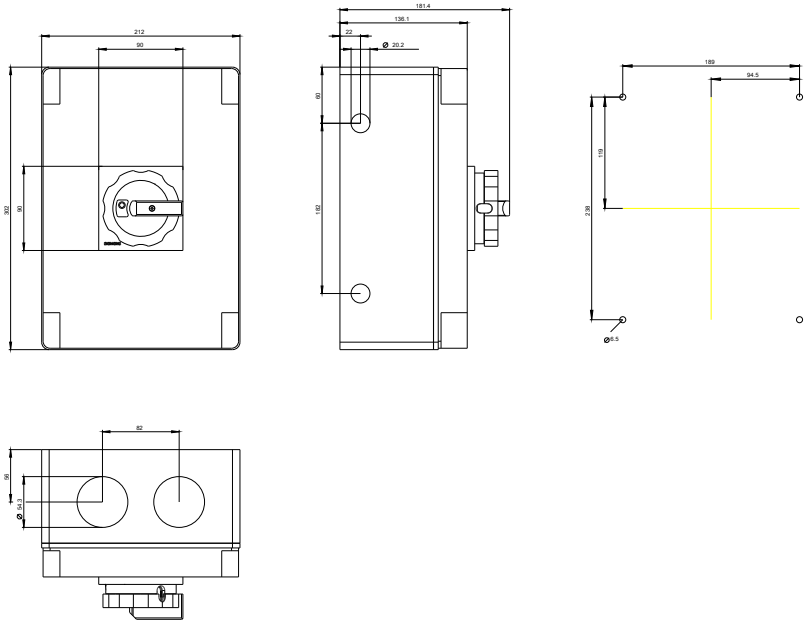

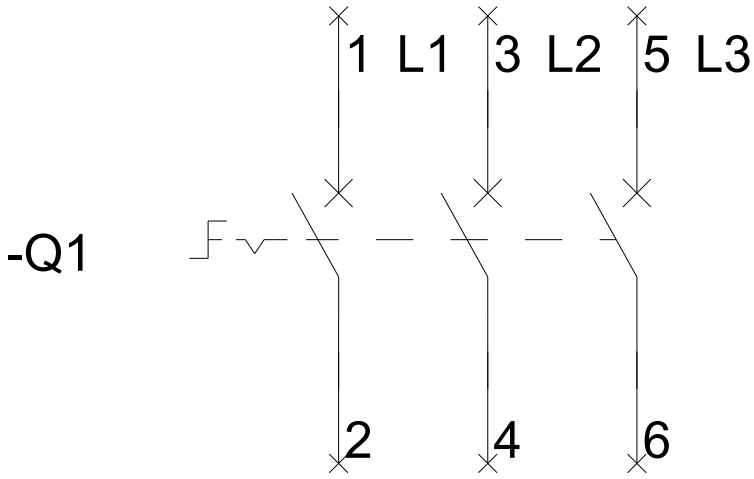

Subject to change without notice
© Copyright Siemens AG

Subject to change without notice
© Copyright Siemens AG