SIEMENS

Show actual product details

Data sheet 5SV3311-6

RCCB, 2-pole, type A, In: 16 A, 30 mA, Un AC: 230 V



Model		
product brandname		SENTRON
Product designation		RCCB
Design of the product		Instantaneous

General technical data		
Number of poles		2
Size of installation devices / acc. to DIN 43880		1
Protection against electrical shock		Finger and back-of-hand safe
Short-circuit current rating	kA	10
circuit-breaker / Design		5SV3
Mechanical service life (switching cycles) / typical		10 000
Overvoltage category		III

Supply voltage		
Supply voltage		
• at AC / rated value	V	230
• for testing equipment / minimum	V	195

Protection class

Subject to change without notice
© Copyright Siemens AG

Protection class IP		IP20, if the distribution board is installed, with connected conductors
Switching capacity		
Switching capacity current		
• acc. to EN 60898 / rated value	kA	0.5
Dissipation		
Power loss [W]		
• for rated value of the current / at AC / in hot operating state / per pole	W	0.4
• maximum	W	0.6
Electricity		
Tripping residual current / rated value	mA	30
rated current In / IEC, DIN/VDE / at 40 Cel	A	16
Type of fault current		A
Current / at AC / rated value	A	16
I2t-value / permissible	$A^2 \cdot s$	15 620
Surge current resistance / rated value	kA	1
Operating frequency		50/60Hz
Product details		
Product feature / silicon-free		Yes
Product extension / can be installed / supplementary devices		Yes
Number		
Number of test cycles / for environmental testing / acc. to IEC 60068-2-30		28
Connections		
Connectable conductor cross-section / stranded		
• minimum	mm^2	0.75
• maximum	mm^2	35
Connectable conductor cross-section / solid		
• minimum	mm^2	0.75
• maximum	mm^2	35
Tightening torque / with screw-type terminals		
• minimum	N·m	2.5
• maximum	N·m	3
Position / of power supply cord		top or bottom
Mechanical Design		
Height	mm	90
Width	mm	36
Depth	mm	70

Subject to change without notice
© Copyright Siemens AG

Mounting position		any
Installation depth	mm	70
Number of width units		2
Mounting type		DIN rail (REG)
Net weight	g	204

Environmental conditions

Ambient temperature		
• minimum	°C	-25
• maximum	°C	45
• during storage / minimum permissible	°C	-40
• during storage / maximum permissible	°C	75

Certificates

Equipment marking		
• acc. to DIN EN 61346-2		F
• acc. to DIN EN 81346-2		F

General Product Approval					Declaration of Conformity
CCC	IMQ	ÖVE		sonstig	EG-Konf.

Further information

Information- and Downloadcenter (Catalogs, Brochures,…)
http://www.siemens.com/lowvoltage/catalogs

Industry Mall (Online ordering system)
https://eb.automation.siemens.com/mall/en/WW/Catalog/Product/5SV3311-6

Service&Support (Manuals, Certificates, Characteristics, FAQs,...)
http://support.automation.siemens.com/WW/view/en/5SV3311-6/all

Image database (product images, 2D dimension drawings, 3D models, device circuit diagrams, ...)
http://www.automation.siemens.com/bilddb/cax_en.aspx?mlfb=5SV3311-6

CAx-Online-Generator
http://www.siemens.com/cax

Tender specifications
http://ausschreibungstexte.siemens.com/tiplv

Subject to change without notice
© Copyright Siemens AG

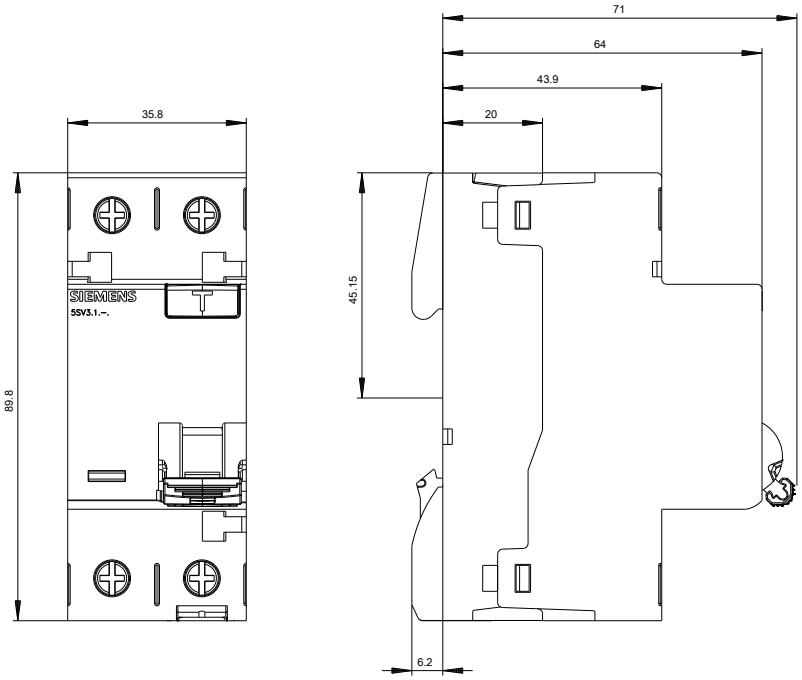

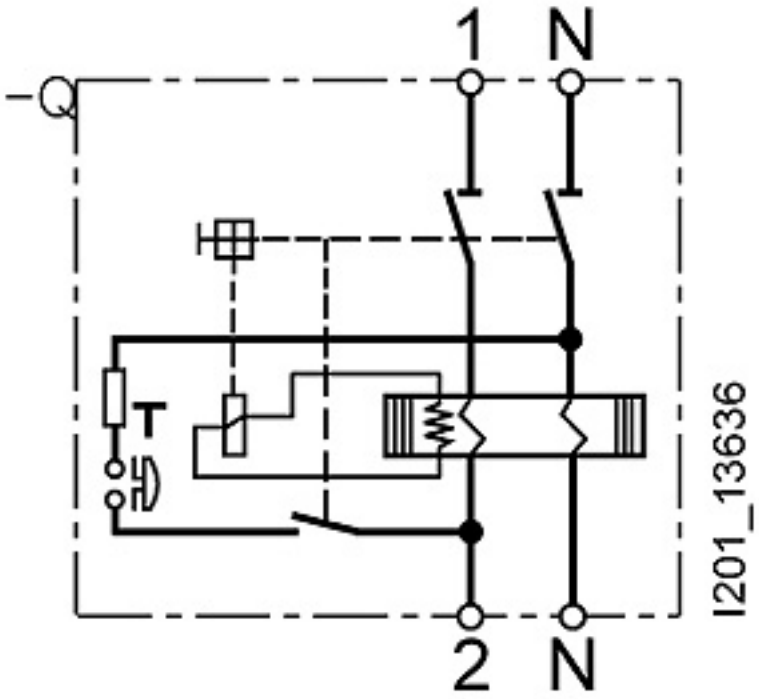

Subject to change without notice
© Copyright Siemens AG