Product data sheet
Characteristics

KSB100SF4
Canalis - tap-off unit for NF fuse - 22 x 58 mm - 100 A with isolator - 3L+N+PE

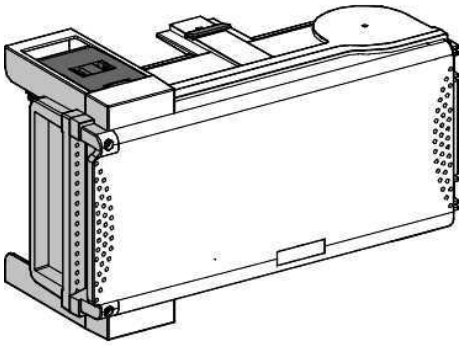

Main

Range	Canalis
Product name	KS
Product or component type	Tap-off unit
[Ie] rated operational current	100 A at 35 °C
Fuse type	Cylindrical - aM - 0...100 A - 22 x 58 mm - conforming to NF Cylindrical - gG - 0...100 A - 22 x 58 mm - conforming to NF
Mounting mode	Plug-in
Tap-off unit polarity	3L+N+PE
Tap-off unit connector type	With fixed polarity

Complementary

Device application	Medium power distribution
[Ue] rated operational voltage	230...690 V depending on protective device
[Uimp] rated impulse withstand voltage	6.8 kV
[Ui] rated insulation voltage	400 V depending on protective device 500 V depending on protective device 690 V depending on protective device
Network frequency	50/60 Hz
Protection type	Fuse
Electrical connection	Copper cable lug ISO63 50 mm² rigid Copper cable lug ISO63 50 mm² flexible
Tap-off unit disconnection mode	By opening the door
Door opening side	Right
Door opening size	545.5 mm
IP degree of protection	IP55 conforming to IEC 60529
IK degree of protection	IK08 conforming to IEC 62262
Provided equipment	Fuse not supplied
Standards	IEC 60439-2 IEC 61439-6
Colour	RAL 9001 white
Width	444 mm
Depth	128 mm
Height	220 mm
Product weight	5 kg

Environment

Earthing system	TT - busbar trunking TN-S - busbar trunking TN-C - busbar trunking TT - tap-off unit TN-S - tap-off unit IT - busbar trunking

The information provided in this documentation contains general descriptions and/or technical characteristics of the performance of the products contained herein.
This documentation is not intended as a substitute for and is not to be used for determining suitability or reliability of these products for specific user applications.
It is the duty of any such user or integrator to perform the appropriate and complete risk analysis, evaluation and testing of the products with respect to the relevant specific application or use thereof.
Neither Schneider Electric Industries SAS nor any of its affiliates or subsidiaries shall be responsible or liable for misuse of the information contained herein.

Offer Sustainability

Sustainable offer status	Green Premium product
RoHS (date code: YYWW)	Compliant - since 1012 - Schneider Electric declaration of conformity
REACh	Reference not containing SVHC above the threshold
Product environmental profile	Available Download Product Environmental
Product end of life instructions	Need no specific recycling operations