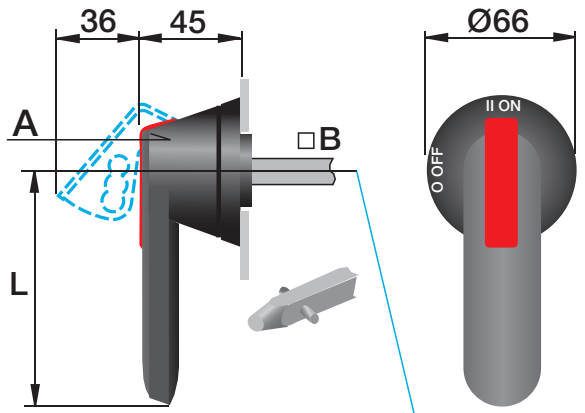

A	L	□ B
OHB 45J5E_	45	5
OHB 45J6E_	45	6
OHB 45J10E_	45	10
OHB 65J5E_	65	5
OHB 65J6E_	65	6
OHB 65J8E_	65	8
OHB 65J10E_	65	10
OHB 80J6E_	80	6
OHB 80J8E_	80	8
OHB 80J10E_	80	10
OHB 95J10E_	95	10
OHB 95J12E_	95	12
OHB 125J10E_	125	10
OHB 125J12E_	125	12
OHB 145J12E_	145	12
OHB 175J12E_	175	12
OHB 275J12E_	275	12

J= IP65, UL/NEMA Type 1, 3R, 12
H= IP54 L= UL/NEMA Type 4, 4X
B= Y= G=

A00193A

For more information please contact:

ABB Oy, Protection and Connection
P.O. Box 622, FI-65101 Vaasa, Finland
www.abb.com/lowvoltage

Power and productivity
for a better world™

34OH45-275E1 rev. Q / 1SCC390008M0017

OH45-275E1
Installation instruction

Label should be affixed to the rear mounting surface immediately adjacent the handle after installation.

Type 1, 3R, 4, 4X or 12

E101914

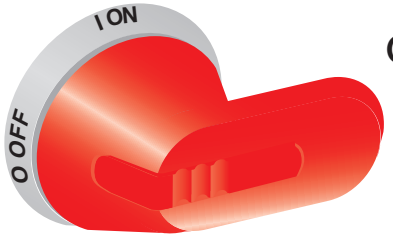

OHY 45...275_ _

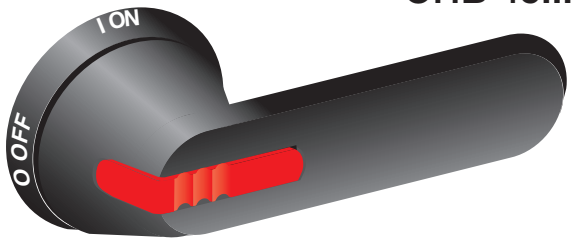

OHB 45...275_ _

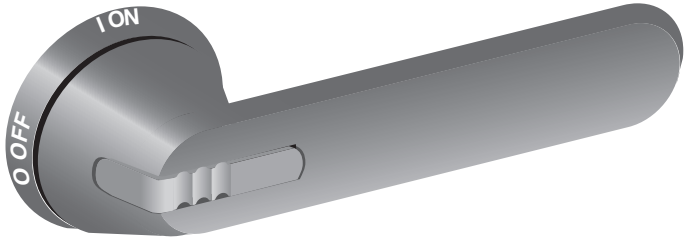

OHG 45...275_ _

A00191A

Power and productivity
for a better world™

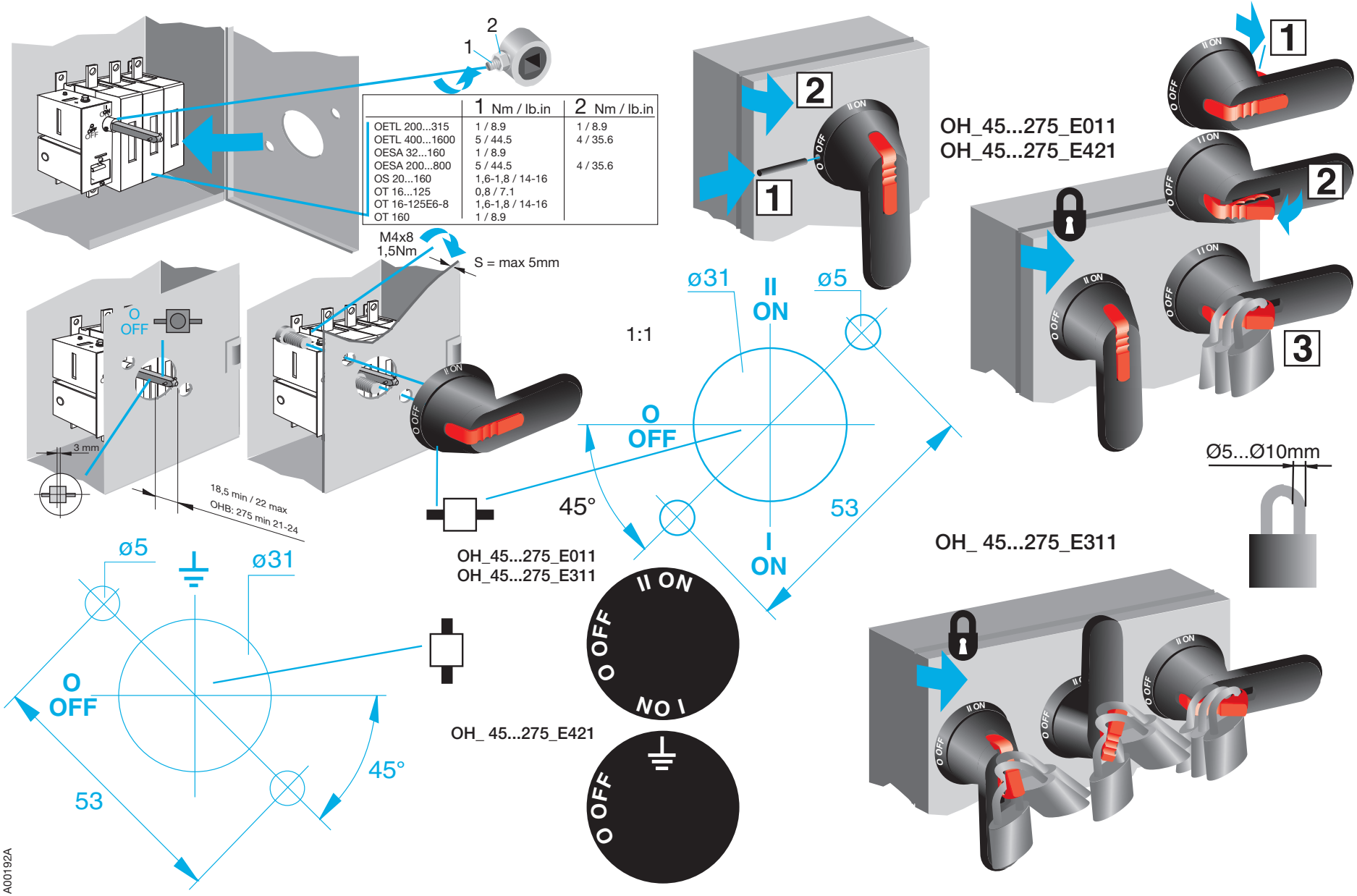
2
1
1 Nm / lb.in
2 Nm / lb.in
OETL 200...315 1 / 8.9 1 / 8.9
OETL 400...1600 5 / 44.5 4 / 35.6
OESA 32...160 1 / 8.9
OESA 200...800 5 / 44.5 4 / 35.6
OS 20...160 1,6-1,8 / 14-16
OT 16...125 0,8 / 7.1
OT 16-125E6-8 1,6-1,8 / 14-16
OT 160 1 / 8.9
M4x8
1,5Nm
S = max 5mm
O
OFF
II ON
3 mm
18,5 min / 22 max
OHB: 275 min 21-24
1:1
ø31
ø5
45°
53
OH_45...275_E011
OH_45...275_E311
OH_ 45...275_E421
OH_45...275_E011
OH_45...275_E421
OH_ 45...275_E311
Ø5...Ø10mm
A00192A