87045 LIMOGES Cedex
Phone :+33 05 55 06 87 87 – Fax :+33 05 55 06 88 88

SPX³-V
Vertical fuse carriers for blade type fuses

Reference(s) : **from 6 058 50 to 6 058 53**

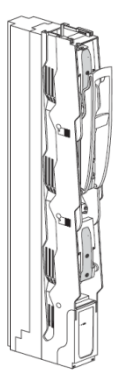



CONTENTS

	PAGES
1. USE	1
2. RANGE	1
3. DIMENSIONS	1
4. OVERVIEW	2
5. ELECTRICAL AND MECHANICAL CHARACTERISTICS	2
6. CONFORMITY	3
7. EQUIPMENTS AND ACCESSORIES	3
8. TABLES	3

1. USE

SPX³-V vertical in-line DIN 43 620 NH fuse without striker fuse carrier offers optimal solutions for protection against short-circuits and over-loads, connection and disconnection of electric circuit parts without load or at full load in all the situations in which fuse could be the right answer to protection needs instead of circuit breakers. For 185mm busbar installations.

2. RANGE

I_n (A)	Reference
160	6 058 50
250	6 058 51
400	6 058 52
630	6 058 53

3. DIMENSIONS

Ref. 6 058 50

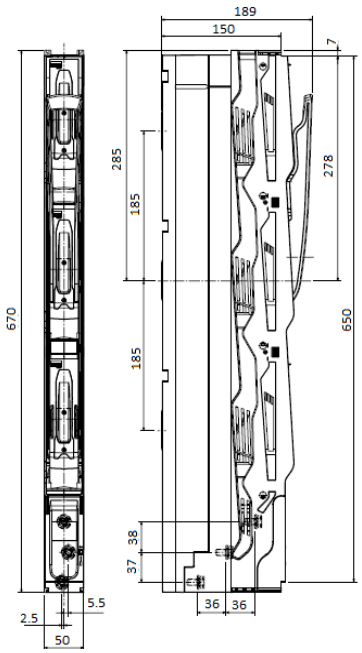

Ref. 6 058 50 (NEXT)

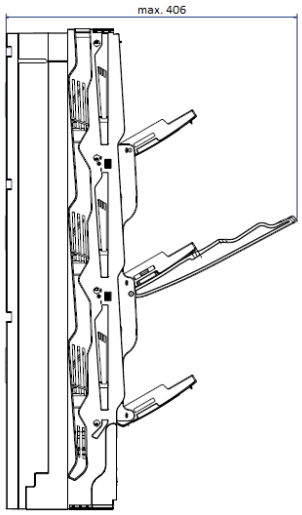

Ref. 6 058 51 / 2 / 3

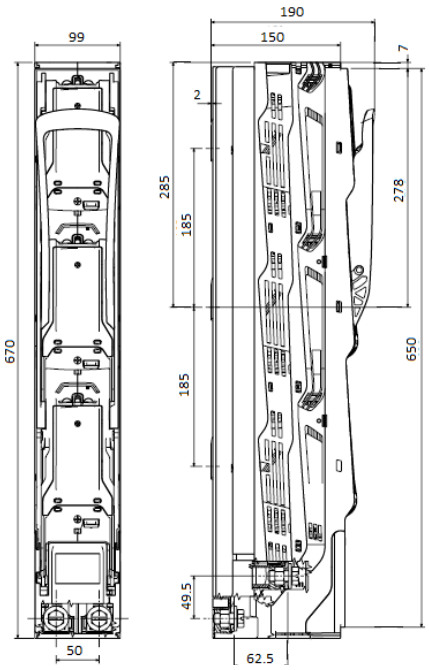

SPX³-V
Vertical fuse carriers for blade type fuses

Reference(s) : **from 6 058 50 to 6 058 53**

3. DIMENSIONS (NEXT)

Ref. 6 058 51 / 2 / 3 (NEXT)

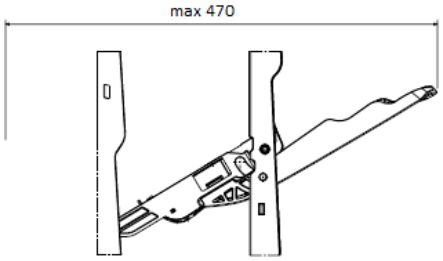

4. OVERVIEW

4.1 Mounting possibilities

On 185 mm collector rail:

- Vertical and horizontal

5. ELECTRICAL AND MECHANICAL CHARACTERISTICS

		SPX³-V 160A	SPX³-V 250A
Size		00	1
Nominal current I_n		160A	250A
Type of current		AC (50/60 Hz)	AC (50/60 Hz)
Nominal voltage U_n		690 V AC	690 V AC
Rated insulating voltage U_e		1000V	1000V
Rated impulse withstand voltage U_{imp}		8kV	8kV
Category of use EN 60947-3	**400V**	-	AC 23 B
	500V	AC 22 B	AC 22 B
	690V	AC 21 B (125A)	AC 21 B
Conditional rated short-circuit current (with gG/gL fuses)	**500V**	100kA	120kA
	690V	100kA	100kA
Power dissipated by fuse carrier (without fuse component)		28W	24W
		SPX³-V 400A	**SPX³-V 630A**
Size		2	3
Nominal current I_n		400A	630A
Type of current		AC (50/60 Hz)	AC (50/60 Hz)
Nominal voltage U_n		690 V AC	690 V AC
Rated insulating voltage U_e		1000V	1000V
Rated impulse withstand voltage U_{imp}		8kV	8kV
Category of use EN 60947-3	**400V**	AC 23 B	AC 23 B
	500V	AC 22 B	AC 22 B
	690V	AC 21 B	AC 21 B
Conditional rated short-circuit current (with gG/gL fuses)	**500V**	120kA	80kA
	690V	100kA	80kA
Power dissipated by fuse carrier (without fuse component)		60W	118W

5.1 Connections

Size	Screw terminal	Direct connection terminals	Prism connection
00	M8 70 mm²	-	1 x 10 - 70 mm² rm, sm, f, f+AE 1 x 95 mm² rm, sm, f
1	M12 2 x 185mm² - 240mm²	1 x 35 - 150mm² sm 1 x 50 - 185mm² se 1 x 35 - 70mm2 rm 1 x 50mm² re Md 32 - 40Nm 2 x 35 - 150mm² sm 2 x 50 - 185mm² se 2 x 35 - 70mm² rm 2 x 35 - 50mm² re Md 18 - 24Nm	-
2	M12 2 x 185mm² - 240mm²	1 x 35 - 150mm² sm 1 x 50 - 185mm² se 1 x 35 - 70mm2 rm 1 x 50mm² re Md 32 - 40Nm 2 x 35 - 150mm² sm 2 x 50 - 185mm² se 2 x 35 - 70mm² rm 2 x 35 - 50mm² re Md 18 - 24Nm	-
3	M12 2 x 185mm² - 240mm²	1 x 35 - 150mm² sm 1 x 50 - 185mm² se 1 x 35 - 70mm2 rm 1 x 50mm² re Md 32 - 40Nm 2 x 35 - 150mm² sm 2 x 50 - 185mm² se 2 x 35 - 70mm² rm 2 x 35 - 50mm² re Md 18 - 24Nm	-

sm: stranded sectored
se: solid sectored
rm: stranded round
re: solid round
f: flexible
AE: wire-end ferrules

SPX³-V
Vertical fuse carriers for blade type fuses

Reference(s) : **from 6 058 50 to 6 058 53**

6. CONFORMITY

IEC 60 947-3

6.1 MARKING

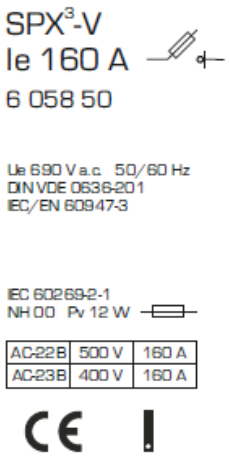

7. EQUIPMENTS AND ACCESSORIES

7.1 Mechanical accessories

Signalling contact

- Auxiliary switch contact (250 V AC / 5 A, 30 V DC / 4 A) ref. 6 052 30

7.2 Connection accessories

Cage terminals

- Prism terminals for copper and aluminium rail

10-95 mm² (size 00) ref. 6 058 65
70-240 mm² (size 1/2/3) ref. 6 058 66
120-400 mm² (size 1/2/3) ref. 6 058 67

7.3 Busbar support

Collector rail supports for 185 mm phase offset

universal busbar support 185mm for drilled and undrilled flat busbars
30, 40, 60, 80, 100, 120 x 10 ref. 6 058 80

7.4 Current transformers

Accuracy class 1, secondary rated current 5A

- Rated current 80A (size 00) ref. 6 058 70
- Rated current 150A (size 00) ref. 6 058 71
- Rated current 150A (size 1/2/3) ref. 6 058 73
- Rated current 200A (size 1/2/3) ref. 6 058 74
- Rated current 250A (size 1/2/3) ref. 6 058 75
- Rated current 400A (size 1/2/3) ref. 6 058 76
- Rated current 600A (size 1/2/3) ref. 6 058 77

8. TABLES

8.1 Maximum fuses power ratings

			DIN 43 620 Fuses ratings (A)			
SPX³-V	I_n (A)	P_{max} (W)	aM	gG	gR	aR
00	160	12	125	160	32	40
1	250	23	250	250	63	80
2	400	34	400	400	125	125
3	630	48	500	630	160	200

Please note: these values are for guidance only; check compliance of fuses maximum power dissipation and rated current on corresponding datasheets