Product data sheet
Characteristics

XB5S4B2M12
USB biometric switch XB5S Ø22mm - USB com - momentary - M12 connector



Main

Range of product	Harmony XB5S
Product or component type	Biometric switch
Product specific application	Materials handling Industrial machines
Device short name	XB5S
Bezel material	Plastic
Mounting diameter	22 mm
Output type	PNP
Sale per indivisible quantity	1
IP degree of protection	IP65 front face conforming to EN/IEC 60529 IP20 rear face conforming to EN/IEC 60529
Type of operator	Momentary
Operator profile	Fingerprint reader
Memory usage	200 users with up to 2 fingerprints per user

Complementary

Software designation	XB5SSoft
Enclosure material	Polyamide PA66
Cable insulation material	PvR
Operating position	Vertical surface installation Flat surface installation Horizontal position
Function of module	Monostable
Product weight	0.215 kg
Marking	CE
Port protocol	USB
Type of connector	USB type A male with 1 m cable
Local signalling	1 LED green, function: output state indicator 1 LED red, function: error

Disclaimer: This documentation is not intended as a substitute for and is not to be used for determining suitability or reliability of these products for specific user applications

Short circuit protection	250 mA by gG external fuse
[Us] rated supply voltage	24 V DC
Electrical connection	M12 connector of 0.2 m
Supply voltage limits	20...30 V DC
Protection type	Overload protection Reverse polarity Short-circuit
Maximum switching current	<= 200 mA
[Ures] residual voltage	<= 1 V, closed state
Current consumption	<= 50 mA no-load

Environment

Ambient air temperature for storage	-25...70 °C
Ambient air temperature for operation	-5...50 °C
NEMA degree of protection	NEMA 12
Standards	IEC 61000-6-4 IEC 61000-6-2
Product certifications	UL CSA
Vibration resistance	+/- 3 mm (f = 5...9 Hz) conforming to IEC 60068-2-6 1 gn (f = 9...500 Hz) conforming to IEC 60068-2-6
Shock resistance	50 gn for 11 ms conforming to IEC 60068-2-27

Offer Sustainability

Sustainable offer status	Not Green Premium product
RoHS (date code: YYWW)	Will not be compliant Will not be compliant

Contractual warranty

Warranty period	18 months

Dimensions of Biometric Switches

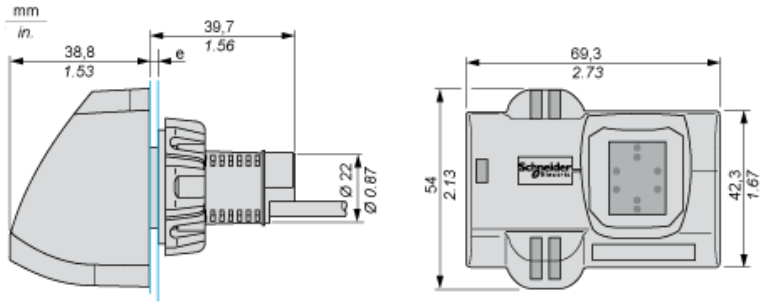

e: 1 to 6 mm / 0.04 to 0.24 in.

XB5S4B2M12

M12 Connector

M12 connector

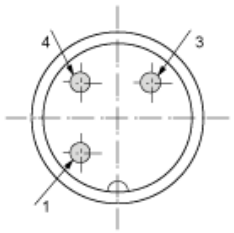

1 : (+)
3 : (-)
4 : Output