SIEMENS

Show actual product details

Data sheet 3SU1400-1AA10-3BA0

CONTACT MODULE WITH 1 CONTACT ELEMENT, 1NO, SPRING-TYPE TERMINAL, FOR FRONT PLATE MOUNTING



product brandname	SIRIUS ACT
Product designation	Contact module
Product type designation	3SU1

General technical data	
Product function	
• positive opening	No
Insulation voltage	
• **rated value**	500 V
Degree of pollution	3
Type of voltage	
• of the operating voltage	AC/DC
• of the input voltage	AC/DC
Surge voltage resistance rated value	6 kV
Protection class IP	
• of the enclosure	IP40
• of the terminal	IP20
Shock resistance	
• acc. to IEC 60068-2-27	Sinusoidal half-wave 50 g / 11 ms
• for railway applications acc. to DIN EN 61373	Category 1, Class B

Subject to change without notice
© Copyright Siemens AG

Vibration resistance	
• acc. to IEC 60068-2-6	10 ... 500 Hz: 5g
• for railway applications acc. to DIN EN 61373	Category 1, Class B
Operating frequency maximum	3 600 1/h
Mechanical service life (switching cycles)	
• typical	10 000 000
Electrical endurance (switching cycles)	
• typical	10 000 000
Thermal current	10 A
Equipment marking	
• acc. to DIN EN 61346-2	S
• acc. to DIN EN 81346-2	S
Continuous current of the C characteristic MCB	10 A

Main circuit

Operating voltage	
• at AC	
— at 50 Hz rated value	5 ... 500 V
— at 60 Hz rated value	5 ... 500 V
• at DC	
— rated value	5 ... 500 V

Power Electronics

Contact reliability	One maloperation per 100 million (17 V, 5 mA), one maloperation per 10 million (5 V, 1 mA)

Auxiliary circuit

Design of the contact of auxiliary contacts	Silver alloy
Number of NC contacts	
• for auxiliary contacts	0
— lagging switching	0
Number of NO contacts	
• for auxiliary contacts	1
— leading contact	0
Number of CO contacts	
• for auxiliary contacts	0
Operating current at AC-12	
• at 24 V rated value	10 A
• at 48 V rated value	10 A
• at 110 V rated value	10 A
• at 230 V rated value	8 A
• at 400 V rated value	8 A
Operating current at AC-15	
• at 24 V rated value	6 A

© Copyright Siemens AG

• at 48 V rated value	6 A
• at 110 V rated value	6 A
• at 230 V rated value	6 A
• at 400 V rated value	3 A
• at 500 V rated value	1.4 A
Operating current at DC-12	
• at 24 V rated value	10 A
• at 48 V rated value	5 A
• at 110 V rated value	2.5 A
• at 230 V rated value	1 A
• at 400 V rated value	0.3 A
• at 500 V rated value	0.3 A
Operating current at DC-13	
• at 24 V rated value	3 A
• at 48 V rated value	1.5 A
• at 110 V rated value	0.7 A
• at 230 V rated value	0.3 A
• at 400 V rated value	0.1 A
• at 500 V rated value	0.1 A

Connections/Terminals

Type of electrical connection	spring-loaded terminals
Type of connectable conductor cross-sections	
• solid without core end processing	2x (0.25 ... 1.5 mm²)
• finely stranded with core end processing	2x (0.25 ... 0.75 mm²)
• finely stranded without core end processing	2x (0.25 ... 1.5 mm²)
• at AWG conductors	2x (24 ... 16)

Ambient conditions

Ambient temperature	
• during operation	-25 ... +70 °C
• during storage	-40 ... +80 °C
Environmental category during operation acc. to IEC 60721	3M6, 3S2, 3B2, 3C3 (without salt spray), 3K6 (with relative humidity of 10 ... 95%, no condensation in operation permitted)

Installation/ mounting/ dimensions

Mounting type	
• of modules and accessories	Front plate mounting
Height	36 mm
Width	9.8 mm
Depth	27.7 mm

Certificates/approvals

Subject to change without notice
© Copyright Siemens AG

General Product Approval					Declaration of Conformity
CCC	CSA	UL	VDE	EAC	EG-Konf.

Test Certificates		other
Werksbescheinigungen	spezielle Prüfbescheinigungen	Bestätigungen

Further information

Information- and Downloadcenter (Catalogs, Brochures,…)
http://www.siemens.com/industrial-controls/catalogs

Industry Mall (Online ordering system)
https://mall.industry.siemens.com/mall/en/en/Catalog/product?mlfb=3SU1400-1AA10-3BA0

Cax online generator
http://support.automation.siemens.com/WW/CAXorder/default.aspx?lang=en&mlfb=3SU1400-1AA10-3BA0

Service&Support (Manuals, Certificates, Characteristics, FAQs,...)
https://support.industry.siemens.com/cs/ww/en/ps/3SU1400-1AA10-3BA0

Image database (product images, 2D dimension drawings, 3D models, device circuit diagrams, EPLAN macros, ...)
http://www.automation.siemens.com/bilddb/cax_de.aspx?mlfb=3SU1400-1AA10-3BA0&lang=en

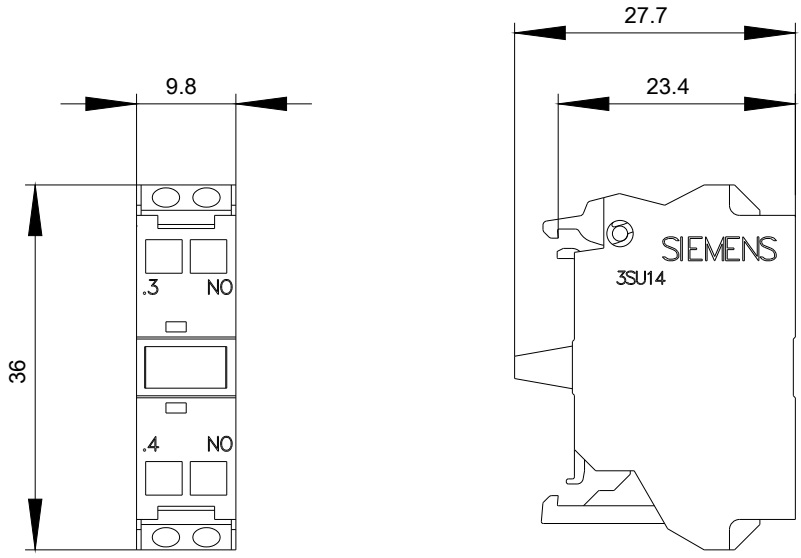

© Copyright Siemens AG

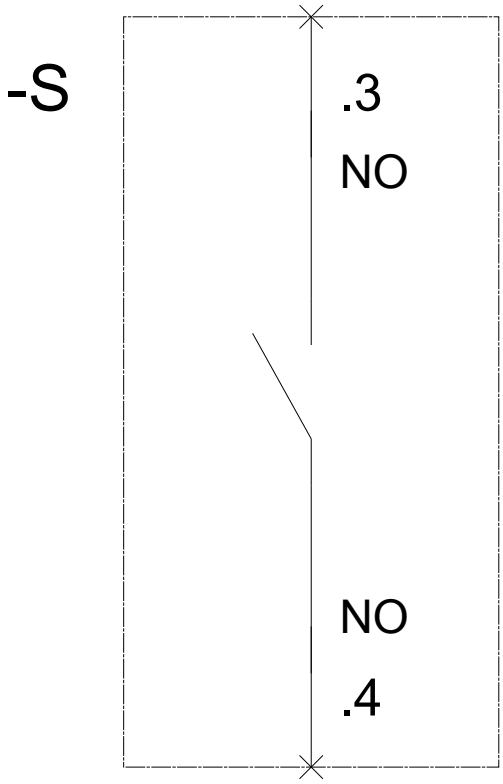

last modified: 02/09/2017

Subject to change without notice
© Copyright Siemens AG