SIEMENS

Show actual product details

## Data sheet 5SF5268

DIAZED FUSE-BASE SIZE III MOULDED, 3-POLE SHOCK-HAZARD-PROTECTED (BGV A2) ENTRY: DOUBLE FUNCTION TERMINAL OUTLET: BOX TERMINAL 63 A 500 V AC



| | |
|---|---|
| **Model** | |
| **product brandname** | SENTRON |
| **Design of the fuse base** | gauge inset |
| **General technical data** | |
| **Number of poles** | 3 |
| **Size of fuse system / acc. to DIN EN 60269-1** | DIII |
| Supply voltage / at AC / rated value | 500 V |
| **Electricity** | |
| Current / at AC / rated value | 63 A |
| **Product details** | |
| Product component / Cover | Yes |
| **Mechanical Design** | |
| **Height** | 150 mm |
| **Depth** | 55 mm |
| **Mounting type** | screw fixing |
| **Net weight** | 580 g |


Subject to change without notice
© Copyright Siemens AG

| | |
|---|---|
| Material / of the enclosure | plastic |

## Declaration of Conformity

CE

EG-Konf.

## Further information

**Information- and Downloadcenter (Catalogs, Brochures,…)**
http://www.siemens.com/lowvoltage/catalogs

**Industry Mall (Online ordering system)**
https://mall.industry.siemens.com/mall/en/en/Catalog/product?mlfb=5SF5268

**Service&Support (Manuals, Certificates, Characteristics, FAQs,...)**
http://support.automation.siemens.com/WW/view/en/5SF5268/all

**Image database (product images, 2D dimension drawings, 3D models, device circuit diagrams, ...)**
http://www.automation.siemens.com/bilddb/cax_en.aspx?mlfb=5SF5268

**CAx-Online-Generator**
http://www.siemens.com/cax

**Tender specifications**
http://www.siemens.com/specifications

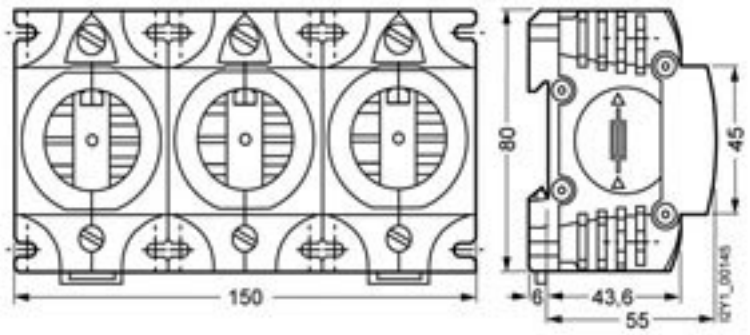



Subject to change without notice
© Copyright Siemens AG

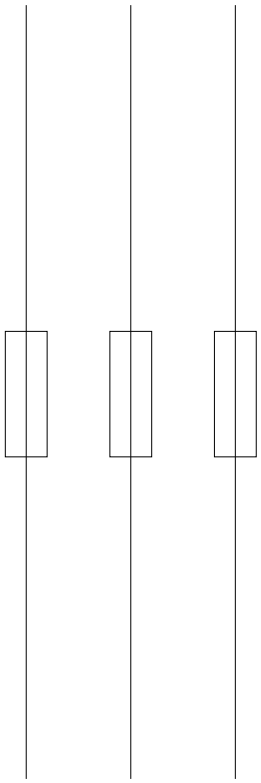


Subject to change without notice
© Copyright Siemens AG