SIEMENS

Show actual product details

Data sheet 5SG7133

MINIZED, switch disconnector with fuse, D02, 3-pole, In: 63 A, Un AC: 400 V



General technical data	
Number of poles	3
Size of fuse system / acc. to DIN EN 60269-1	D02
Overvoltage category	4
Voltage	
Surge voltage resistance / rated value	6 kV
Protection class	
Protection class IP	IP20, with connected conductors
Electricity	
Current / at AC / rated value	63 A
Main circuit	
Operating voltage / at AC / rated value	400 V
Product details	
Product feature / sealable	Yes
Connections	
Tightening torque / with screw-type terminals	

Subject to change without notice
© Copyright Siemens AG

• minimum	2.5 N·m
• maximum	3 N·m

Mechanical Design

Height	70 mm
Width	81 mm
Depth	90 mm
Mounting position	any, preferably vertical
Net weight	411 g

Certificates

Equipment marking	
• acc. to DIN EN 61346-2	F
• acc. to DIN EN 81346-2	F

General Product Approval	Declaration of Conformity	Test Certificates	Shipping Approval
VDE	EG-Konf.	Typprüfbescheinigung/Werkszeugnis	GL

Further information

Information- and Downloadcenter (Catalogs, Brochures,…)
http://www.siemens.com/lowvoltage/catalogs

Industry Mall (Online ordering system)
https://mall.industry.siemens.com/mall/en/en/Catalog/product?mlfb=5SG7133

Service&Support (Manuals, Certificates, Characteristics, FAQs,...)
http://support.automation.siemens.com/WW/view/en/5SG7133/all

Image database (product images, 2D dimension drawings, 3D models, device circuit diagrams, ...)
http://www.automation.siemens.com/bilddb/cax_en.aspx?mlfb=5SG7133

CAx-Online-Generator
http://www.siemens.com/cax

Tender specifications
http://www.siemens.com/specifications

Subject to change without notice
© Copyright Siemens AG

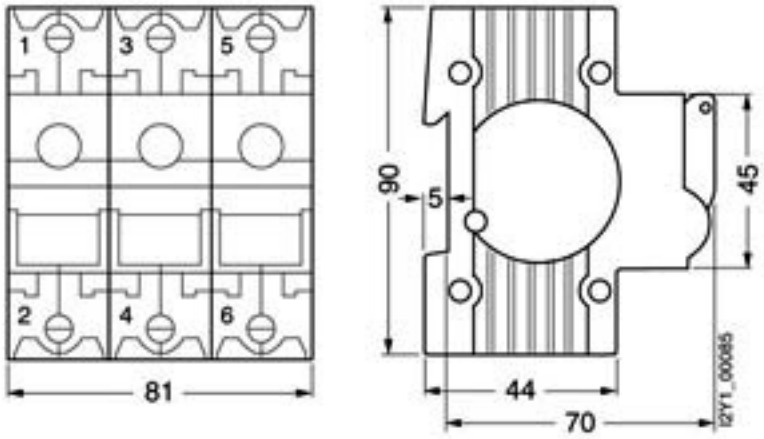

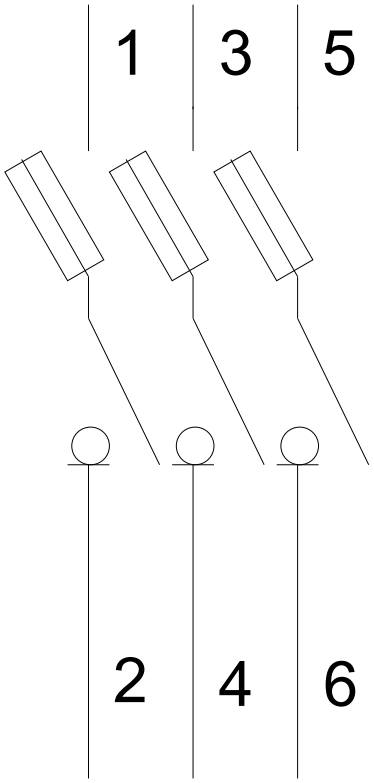

Subject to change without notice
© Copyright Siemens AG