SIEMENS

Data sheet 3SU1000-0AB20-0AD0

PUSHBUTTON, 22MM, ROUND, PLASTIC, RED, INSCRIPTION: O, FLAT BUTTON, MOMENTARY CONTACT TYPE



Figure similar

product brandname	SIRIUS ACT
Product designation	Pushbuttons
Product type designation	3SU1

Enclosure

Number of command points	1

Actuator

Design of the operating mechanism	pushbutton with flat button
Manner of function of the actuating element	Momentary contact type
Product extension optional Light source	No
Color	
• of the actuating element	Red
Material of the actuating element	plastic
Shape of the actuating element	round
Outer diameter of the actuating element	29.5 mm
Marking of the actuating element	"O"
Type of unlocking device	without

Front ring

Subject to change without notice
© Copyright Siemens

Product component front ring	Yes
Design of the front ring	Standard
Material of the front ring	plastic
Color of the front ring	black

General technical data

Protection class IP	IP66, IP67, IP69(IP69K)
Degree of protection NEMA rating	NEMA 1, 2, 3, 3R, 4, 4X, 12
Vibration resistance	
• acc. to IEC 60068-2-6	10 ... 500 Hz: 5g
• for railway applications acc. to DIN EN 61373	Category 1, Class B
Operating frequency maximum	3 600 1/h
Mechanical service life (switching cycles)	
• typical	10 000 000
Equipment marking	
• acc. to DIN EN 61346-2	S
• acc. to DIN EN 81346-2	S

Ambient conditions

Ambient temperature	
• during operation	-25 ... +70 °C
• during storage	-40 ... +80 °C
Environmental category during operation acc. to IEC 60721	3M6, 3S2, 3B2, 3C3, 3K6 (with relative air humidity of 10 ... 95 %)

Installation/ mounting/ dimensions

Height	29.5 mm
Width	29.5 mm
Shape of the installation opening	round
Mounting diameter	22.3 mm
Positive tolerance of installation diameter	0.4 mm
Mounting height	11 mm
Installation width	29.5 mm
Installation depth	24.3 mm

Certificates/approvals

Subject to change without notice
© Copyright Siemens

General Product Approval			Declaration of Conformity	Test Certificates	
CSA	UL	EAC	EG-Konf.	Werksbescheinigungen	spezielle Prüfbescheinigungen

other
Bestätigungen

Further information

Information- and Downloadcenter (Catalogs, Brochures,…)
http://www.siemens.com/industrial-controls/catalogs

Industry Mall (Online ordering system)
https://mall.industry.siemens.com/mall/en/en/Catalog/product?mlfb=3SU1000-0AB20-0AD0

Cax online generator
http://support.automation.siemens.com/WW/CAXorder/default.aspx?lang=en&mlfb=3SU1000-0AB20-0AD0

Service&Support (Manuals, Certificates, Characteristics, FAQs,...)
https://support.industry.siemens.com/cs/ww/en/ps/3SU1000-0AB20-0AD0

Image database (product images, 2D dimension drawings, 3D models, device circuit diagrams, EPLAN macros, ...)
http://www.automation.siemens.com/bilddb/cax_de.aspx?mlfb=3SU1000-0AB20-0AD0&lang=en

Subject to change without notice
© Copyright Siemens

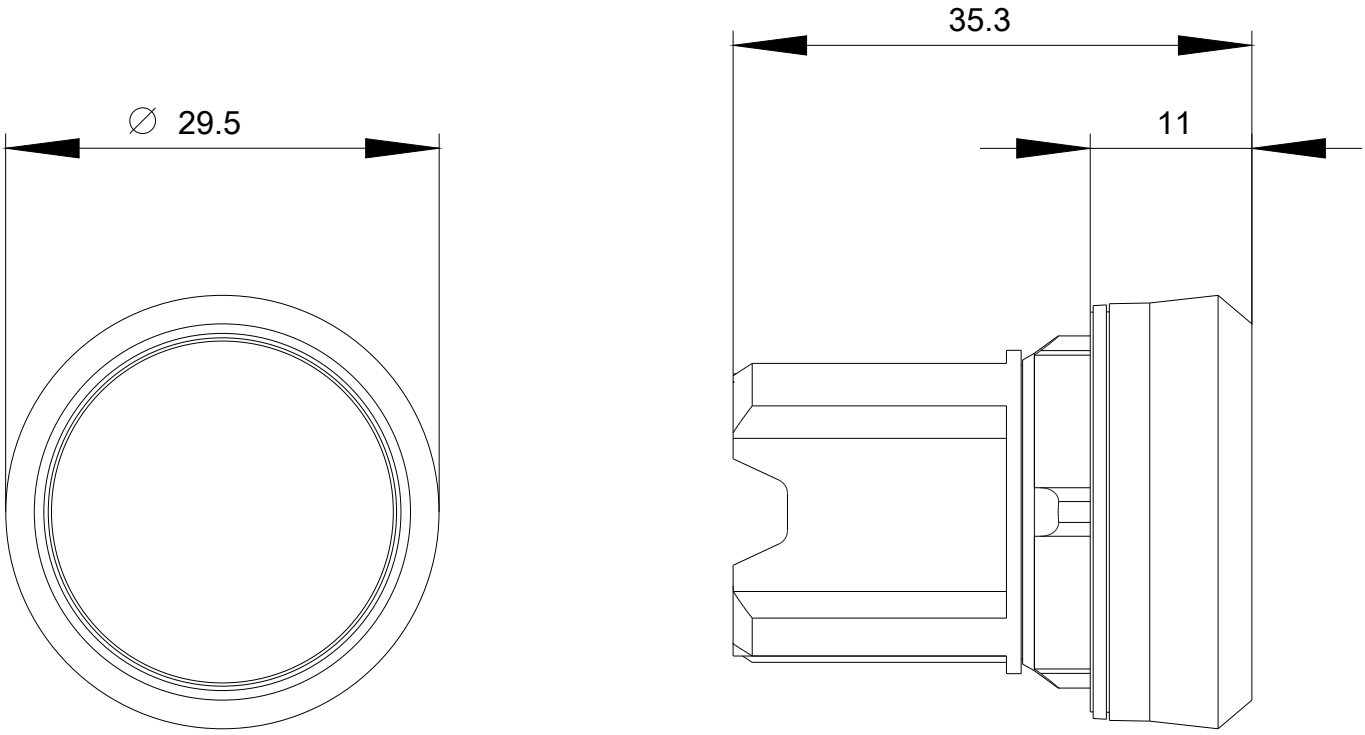

last modified: 04/30/2017

Subject to change without notice
© Copyright Siemens