SIEMENS

Data sheet 3SU1030-4BF01-0AA0

RONIS KEY-OPERATED SWITCH, 22MM, ROUND, PLASTIC WITH METAL FRONT RING, LOCK NO. SB30, WITH 2 KEYS, 2 SWITCH POSITIONS O-I, LATCHING, ACTUATING ANGLE 90 DEG., 10:30H/13:30H, KEY REMOVAL POS. O, POSSIBLE SPECIAL LOCKS: SB31, 421, 455



Figure similar

product brandname	SIRIUS ACT
Product designation	Key-operated switches
Product type designation	3SU1

Actuator	
Design of the operating mechanism	Key-operated switch
Manner of function of the actuating element	latching, 90° (10:30 h/13:30 h)
Product extension optional Light source	No
Color	
• of the actuating element	Silver
Material of the actuating element	metal
Shape of the actuating element	Key
Outer diameter of the actuating element	29.5 mm
Number of switching positions	2
Switch position for key distraction	O
Actuating angle	
• clockwise	90°
Lock make	RONIS

Subject to change without notice
© Copyright Siemens

Key number	SB30

Front ring

Product component front ring	Yes
Design of the front ring	Standard
Material of the front ring	Metal, matt
Color of the front ring	sand gray

General technical data

Protection class IP	IP66, IP67, IP69(IP69K)
• of the terminal	IP20
Degree of protection NEMA rating	NEMA 1, 2, 3, 3R, 4, 4X, 12
Vibration resistance	
• acc. to IEC 60068-2-6	10 ... 500 Hz: 5g
• for railway applications acc. to DIN EN 61373	Category 1, Class B
Operating frequency maximum	1 800 1/h
Mechanical service life (switching cycles)	
• typical	1 000 000
Equipment marking	
• acc. to DIN EN 61346-2	S
• acc. to DIN EN 81346-2	S

Ambient conditions

Ambient temperature	
• during operation	-25 ... +70 °C
• during storage	-40 ... +80 °C
Environmental category during operation acc. to IEC 60721	3M6, 3S2, 3B2, 3C3, 3K6 (with relative air humidity of 10 ... 95 %)

Installation/ mounting/ dimensions

Height	29.5 mm
Width	29.5 mm
Shape of the installation opening	round
Mounting diameter	22.3 mm
Positive tolerance of installation diameter	0.4 mm
Mounting height	49.4 mm
Installation width	29.5 mm
Installation depth	25.4 mm

Certificates/approvals

Subject to change without notice
© Copyright Siemens

General Product Approval			Declaration of Conformity	Test Certificates	
CSA	UL	EAC	EG-Konf.	Werksbescheinigungen	spezielle Prüfbescheinigungen

other
Bestätigungen

Further information

Information- and Downloadcenter (Catalogs, Brochures,…)
http://www.siemens.com/industrial-controls/catalogs

Industry Mall (Online ordering system)
https://mall.industry.siemens.com/mall/en/en/Catalog/product?mlfb=3SU1030-4BF01-0AA0

Cax online generator
http://support.automation.siemens.com/WW/CAXorder/default.aspx?lang=en&mlfb=3SU1030-4BF01-0AA0

Service&Support (Manuals, Certificates, Characteristics, FAQs,...)
https://support.industry.siemens.com/cs/ww/en/ps/3SU1030-4BF01-0AA0

Image database (product images, 2D dimension drawings, 3D models, device circuit diagrams, EPLAN macros, ...)
http://www.automation.siemens.com/bilddb/cax_de.aspx?mlfb=3SU1030-4BF01-0AA0&lang=en

Subject to change without notice
© Copyright Siemens

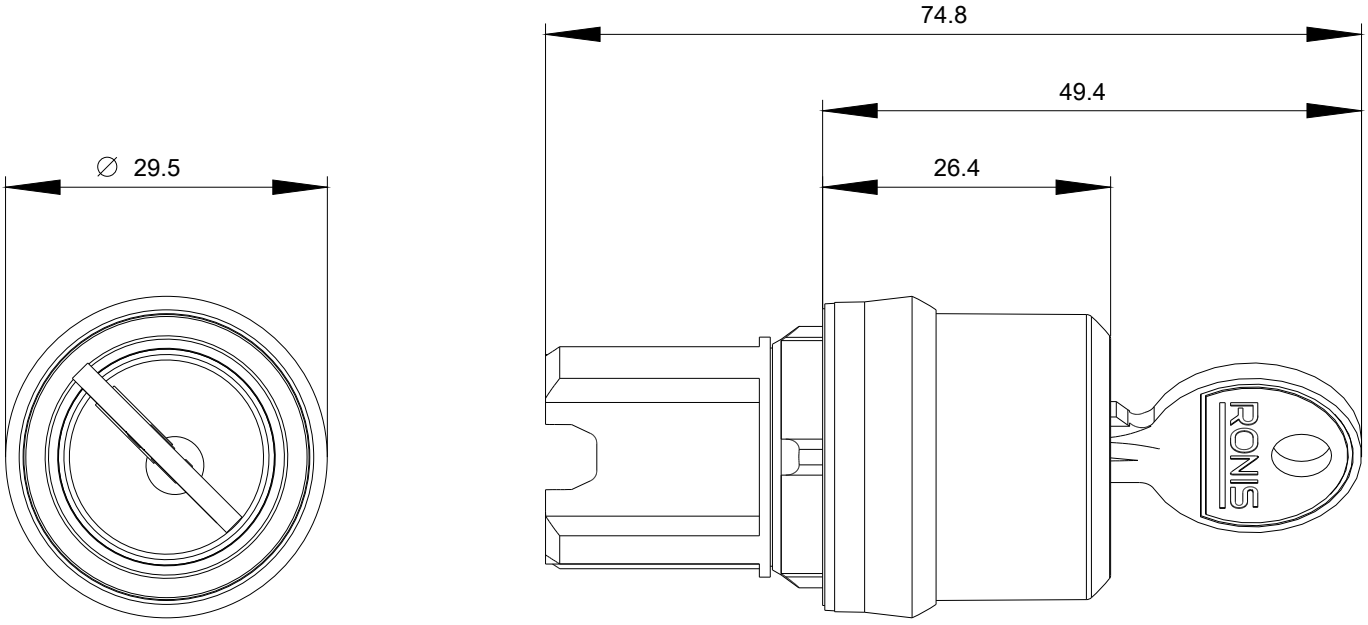

last modified: 05/01/2017

Subject to change without notice
© Copyright Siemens