SIEMENS

Data sheet BVP:203162

BD2-AK3X/GS00 TAP-OFF UNIT 125A / 1X 3POLE FU SE SOCKET GS00

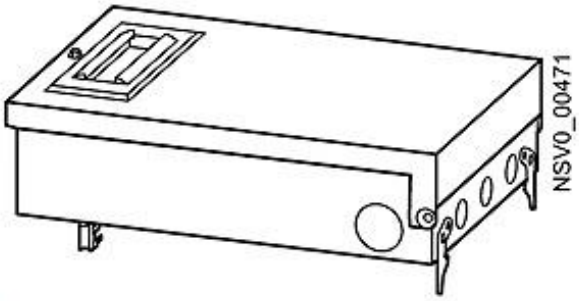

Figure similar

Model	
Product designation	tap-off unit for BD2 busbar trunking system
Protection class	
Protection class IP	IP54
Main circuit	
Operating frequency / rated value	
• minimum	50 Hz
• maximum	60 Hz
Operating voltage / at AC	
• at 50 Hz / rated value / maximum	690 V
• at 60 Hz / rated value / maximum	690 V
Operating current	
• for circuit 1 / at AC / at 50 Hz / rated value / maximum	125 A
• for circuit 1 / at AC / at 60 Hz / rated value / maximum	125 A

Subject to change without notice
© Copyright Siemens

Connections	
Connectable conductor cross-section / in the outgoing unit	
• minimum	10 mm²
• maximum	70 mm²

Tap-off points	
Outgoing unit version	cable entry
Design of short-circuit and overloading protection / in the outgoing unit	3-pole NH00 125 A fuse base
Size of the outgoing feeder	3
Number of poles / of the outgoing feeder	5

Mechanical Design	
Height	160 mm
Width	205 mm
Length	440 mm
Product component / Locking mechanism	Yes

Declaration of Conformity

CE
EG-Konf.

Further information

Information- and Downloadcenter (Catalogs, Brochures,…)
http://www.siemens.com/lowvoltage/catalogs

Industry Mall (Online ordering system)
https://mall.industry.siemens.com/mall/en/en/Catalog/product?mlfb=BVP:203162

Service&Support (Manuals, Certificates, Characteristics, FAQs,...)
http://support.automation.siemens.com/WW/view/en/BVP:203162/all

Image database (product images, 2D dimension drawings, 3D models, device circuit diagrams, ...)
http://www.automation.siemens.com/bilddb/cax_en.aspx?mlfb=BVP:203162

CAx-Online-Generator
http://www.siemens.com/cax

Tender specifications
http://www.siemens.com/specifications

Subject to change without notice
© Copyright Siemens