SIEMENS

Data sheet 3SU1930-0FA80-0AA0

SEALING PLUG FOR UNUSED COMMAND POINTS, 22 mm, METAL, SAND GRAY (FRONT) PLASTIC, BLACK (BACK)



Figure similar

product brandname	SIRIUS ACT
Product designation	Sealing plug
Product type designation	3SU1

Actuator

Shape of the actuating element	round
Outer diameter of the actuating element	29.5 mm

General technical data

Protection class IP	IP66, IP67, IP69(IP69K)
Degree of protection NEMA rating	NEMA 1, 2, 3, 3R, 4, 4X, 12
Equipment marking	
• acc. to DIN EN 61346-2	S
• acc. to DIN EN 81346-2	S

Ambient conditions

Ambient temperature	
• during operation	-25 ... +70 °C
• during storage	-40 ... +80 °C

Subject to change without notice
© Copyright Siemens

Environmental category during operation acc. to IEC 60721	3M6, 3S2, 3B2, 3C3, 3K6 (with relative air humidity of 10 ... 95 %)

Installation/ mounting/ dimensions

Shape of the installation opening	round
Mounting diameter	22.3 mm
Positive tolerance of installation diameter	0.4 mm
Mounting height	6.5 mm
Installation width	29.5 mm
Installation depth	24.2 mm

Accessories

Material of accessory	Metal
Color of accessory	sand gray

Certificates/approvals

General Product Approval	Declaration of Conformity	Test Certificates		other
EAC	CE EG-Konf.	Werksbescheinigungen	spezielle Prüfbescheinigungen	Bestätigungen

Further information

Information- and Downloadcenter (Catalogs, Brochures,…)
http://www.siemens.com/industrial-controls/catalogs

Industry Mall (Online ordering system)
https://mall.industry.siemens.com/mall/en/en/Catalog/product?mlfb=3SU1930-0FA80-0AA0

Cax online generator
http://support.automation.siemens.com/WW/CAXorder/default.aspx?lang=en&mlfb=3SU1930-0FA80-0AA0

Service&Support (Manuals, Certificates, Characteristics, FAQs,...)
https://support.industry.siemens.com/cs/ww/en/ps/3SU1930-0FA80-0AA0

Image database (product images, 2D dimension drawings, 3D models, device circuit diagrams, EPLAN macros, ...)
http://www.automation.siemens.com/bilddb/cax_de.aspx?mlfb=3SU1930-0FA80-0AA0&lang=en

© Copyright Siemens

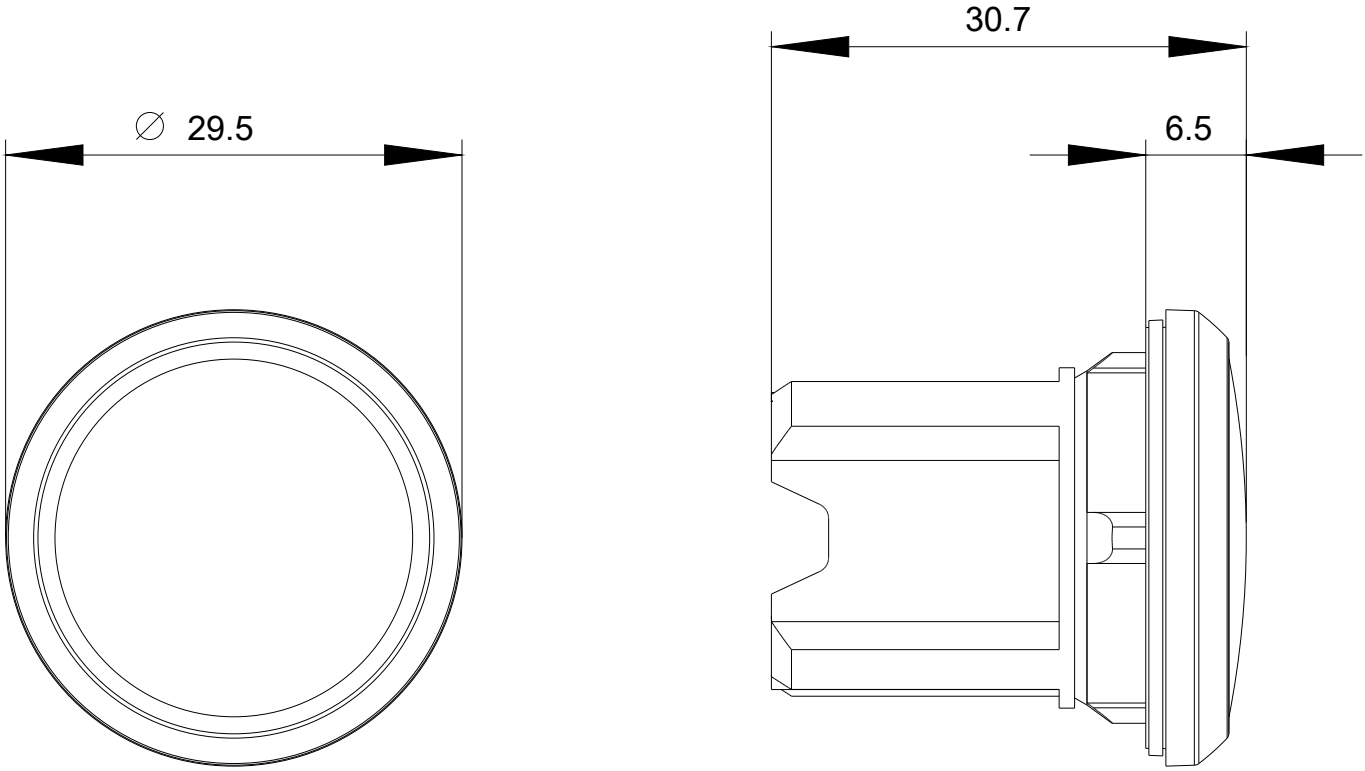

last modified: 05/01/2017

Subject to change without notice
© Copyright Siemens