Light is OSRAM

SubstiTUBE® Value EM – ST8V-1.2m-17W-EM

Datasheet

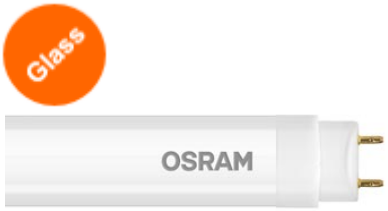

Innovative LED-lamp, easy and safe to use in CCG installations as direct retrofit. Energy saving potential of up to 61% by replacing 1.2 m T8 fluorescent tubes.
Instant 100% light without flickering. No mercury.

Applicable in warehouses, cold storage, supply rooms, corridors, industry, stairways, garages, etc; for applications with high operating hours.

Technical operating data

Product	Color	Colortemp. [K]	Lum. Flux [lm]	Voltage [V] / Frequency [Hz] Input current [mA]	Power [W]	Radiance-Angle [°]
ST8V-1.2m-17W-865-EM	Cool Daylight	6500 K	1700	220 - 240 V 50 / 60 Hz 77 mA	17 W	220°
ST8V-1.2m-17W-840-EM	Cool White	4000 K	1700			
ST8V-1.2m-17W-830-EM	Warm White	3000 K	1530			

All Data are related to the entire lamp. Due to the special conditions of the manufacturing processes of LED the typical data of technical parameters can only reflect statistical figures and do not necessarily correspond to the actual parameters of each single product which could differ from the typical data.

Technical Features

- LED lamp in T8 shape with G13 socket
- Glass body
- Weight: 214 g
- For operation at magnetic ballast without rewiring
- Direct Retrofit for CCG luminaires; replacement of lamp and included starter
- Powerfactor > 0.9
- Up to 30.000 h lifetime
- Switching cycles > 200.000
- Color Rendering Index (CRI) > 80
- High color homogeneity
- RoHS-conformity, no mercury
- Not for operation with ECG, not dimmable
- Energy Efficiency Class: A+

Minimum / Maximum ratings

	Operating temperature Tc	Storage temperature Ts	Ambient temperature Ta
ST8V-1.2m	-20° … 65°C	-20° … 80°C	-20° ... 45°C

Drawings

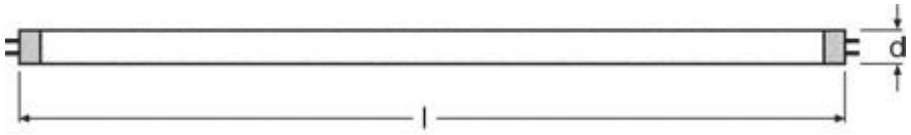

Product	l	d
ST8V-1.2m	1200 mm	27.5 mm

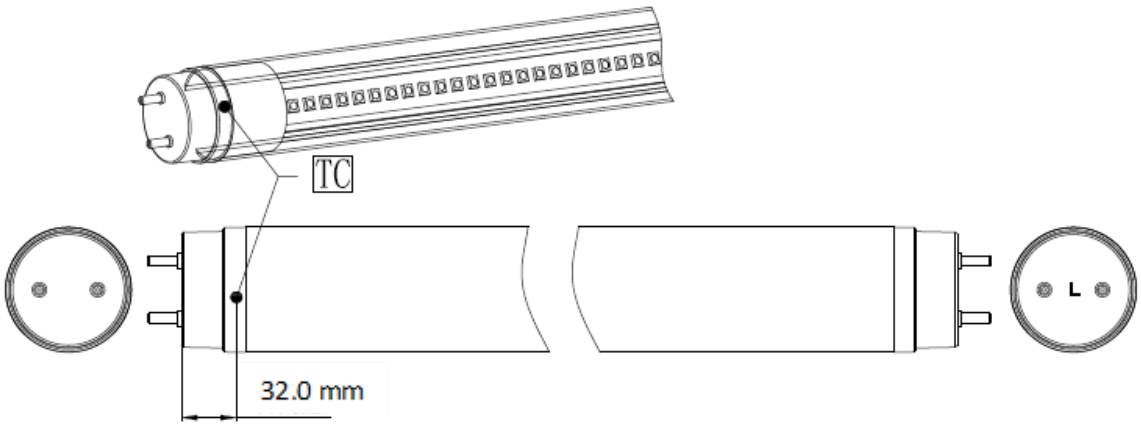



Safety and Application notes

- The SubstiTUBE® Value must not be damaged or operated in a damaged condition.
- When operating with CCG, the included "SubstiTUBE® Start" has to be inserted as well. If the conventional starter is not replaced the SubstiTUBE® Value will start blinking. Switch off immediately, the SubstiTUBE® Value can be damaged!

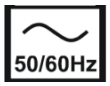

Lamp suitable for 50 Hz or 60 Hz operation



Lamp not suitable for high frequency operation



Lamp not suitable for emergency operation

- Do not use SubstiTUBE® Value in luminaires which do not have any starter or when the starter cannot be replaced.
- Not usable in luminaires with serial lamp connection i.e. more than one tube at one magnetic ballast (tandem circuitry).
- The SubstiTUBE® Value emits light only with a limited angle, not like a fluorescent tube with 360°output.
- Due to the characteristic light distribution of the SubstiTUBE® Value, the resulting luminaire light characteristic is likely to change. It is not guaranteed that e.g. standards for lighting at working places will be complied to after replacement. A photometric check of the installation is recommended.
- The effective energy savings depend on the efficiency of the luminaire setup to be replaced and should be considered individually in each case.
  Particularly magnetic ballast losses are reduced to ohmic losses and are normally only about 1 W.
-  The SubstiTUBE® Value is protected according to IP20. Applications with external risk of moisture and dust can be served with an adequately protected luminaire.
- SubstiTUBE® products differ in their diameters and geometries from fluorescent lamps. Their use in open batten luminaires with gaskets is possible if no excessive force is expended during the fixing. Obtaining the necessary IP protection in open batten luminaires with gaskets cannot be ensured.
- SubstiTUBE® Value may also be driven directly on line voltage. In order to grant a safe operation mode please refer to the installation instructions for further information.

- Maximum amount of SubstiTUBE® Value on one circuit breaker

Circuit breaker 10 A (B type)	//	CCG	//	80
	//	CCG incl. comp. cap.	//	20
	//	Direct mains	//	85
Circuit breaker 16 A (B type)	//	CCG	//	130
	//	CCG incl. comp. cap.	//	30
	//	Direct mains	//	135

- Photobiological Safety of lamps and lamp systems according to IEC 62471. Risk Group: Exempt

Installation Instructions for CGG

- Make sure that the supply voltage is disconnected.
- Carefully remove the fluorescent tube and starter according to the lamp holder type.
- Insert SubstiTUBE® Value and SubstiTUBE® Start properly.

Below an example for typical lamp holder types is described

- Turn the conventional lamp 90° degrees and take it out of the socket.
- Remove the conventional starter by turning it.
- Insert and latch the SubstiTUBE® Start into starter socket.
- Insert SubstiTUBE® Value into socket and locate into position by turning 90°.
- Check light emission direction.

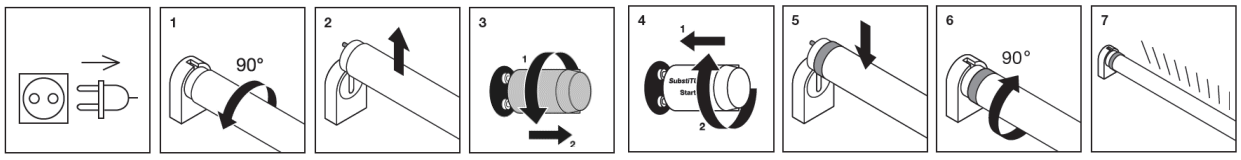

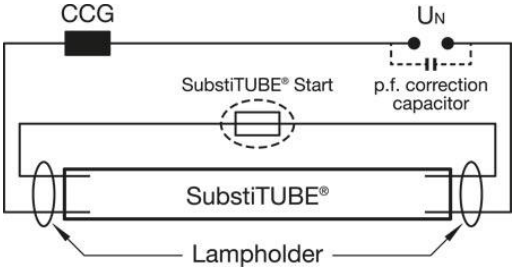

Circuit diagram of a retrofitted CCG luminaire

Ordering guide

Product name	Light color	EAN*	S-Unit**
ST8V-1.2m-17W-865-EM	Cool Daylight / 6500 K	4052899955776	
ST8V-1.2m-17W-840-EM	Cool White / 4000 K	4052899955752	25 x 1
ST8V-1.2m-17W-830-EM	Warm White / 3000 K	4052899955738	

* EAN: Ordering number per single module
** S-Unit: Lamps per shipping unit

Sales and Technical Support

Sales and technical support is given by the local OSRAM subsidiaries.
On our worldwide homepage all OSRAM subsidiaries are listed with complete address and phone numbers.

Further Information

➢ Downloads: Eulumdat /IES files, CE declaration www.osram.com/SubstiTUBE

OSRAM GmbH

Head Office:

Marcel-Breuer-Strasse 6
80807 Munich, Germany
Phone +49 89 6213-0
www.osram.com