WERMA
SIGNALTECHNIK

Catalogue 2011/12



WERMA
SIGNALTECHNIK

Catalogue 2011/12

About WERMA



We make sure you‘re seen and heard.

WERMA Signaltechnik is one of the world's leading companies for optical and audible signal devices. The international company located in South West Germany sets the tone technologically with its many state-of-the-art innovations.

Our signal devices make working environments safe and processes efficient – on machines, in factory halls or in the building services industry. With a broad line of over 3,500 products, WERMA offers solutions for an extremely wide range of signalling applications.



We are there where you need us.

With our own subsidiaries in many European countries as well as in China, a sales cooperation in the U.S.A. and a tightly woven network of international sales partners we ensure outstanding worldwide on-site support. Our customers benefit from exemplary service with fast, on-time delivery of all products and accessories. WERMA products can be easily ordered online at www.werma.com.

Our consistently high customer satisfaction ratings show that our customers feel WERMA takes good care of them.

We are constantly developing

Innovation is the driving force for us to further expand our technological advantage. WERMA conducts both systematic core research and specific product development for which the most modern project management methods are employed.

We test all new developments in our own optical and acoustic laboratories. The success of this innovation policy is demonstrated in the many patents, design awards and positive customer evaluations we have received.



Quality „Made in Germany“

We produce our own plastics, electronics and injection-mould tooling to guarantee that our products are truly "made in Germany".

Our production engineering uses the advantages of lean production processes and intelligent automation to ensure we are consistently fast and flexible.

WERMA is DIN EN ISO 9001: 2000 certified. Our processes and products are the subject of rigorous testing to guarantee consistently high quality levels.

Contents

New Products and Awards

Page 6
Page 8

Signal Towers

Page 10

Optical Signal Devices – Installation Beacons

Page 80

Optical Signal Devices – Free-standing Beacons

Page 102

Optical-Audible Signal Devices

Page 170

Audible Signal Devices

Page 200

Ex Signal Devices

Page 240

Technical Diagrams

Page 264

Sales Network

Page 306

Technical Information

General Information 314
Tech-Talk – By Experts for Experts 320
Product Number Index..... 338

Where can I find ... ?

Customer satisfaction is our highest priority. Your wishes and requirements come first at all times and with this in mind we are constantly improving our service and product range.

To help find your way through our extensive catalogue we have compiled a navigation guide.

In this way you can find everything you need in no time at all !

Technical data

The product specific technical data includes dimensions, fixing options, and connection possibilities.

This information can be found on the relevant product page in our catalogue under the heading "Technical Specifications".



Order specifications

The order number of a product is to be found after the technical data on the relevant page.

The order numbers for specific colours and voltages are listed here.

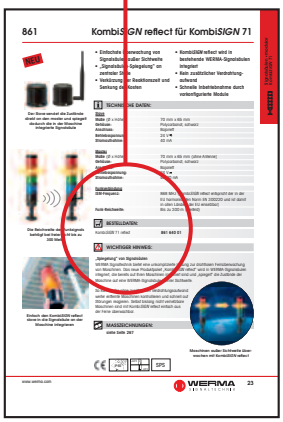

Accessories

Our extensive range of product accessories can be found either immediately on the relevant catalogue page or on the following page.



Weight, protection rating, temperature

Important data relating to our products can be found on the relevant catalogue page in the form of pictograms.

The key to these icons is to be found on page 314 of this catalogue.



WERMA SIGNALTECHNIK



Sound

Information about the sound output of our audible signal devices can be obtained in the pictograms on the relevant product pages.

The key to these icons is on page 314 of the catalogue.

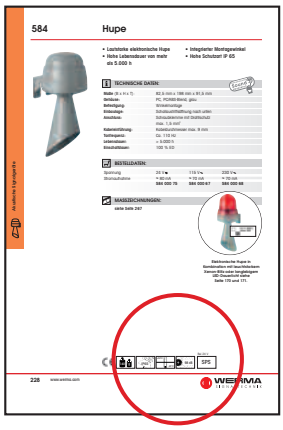

Technical diagrams

A detailed drawing of each product can be found under the heading "Technical Diagrams" (from page 264 onwards).

The exact page number for the required drawing is given on the product page.

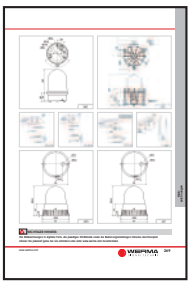

Technical Diagrams

Technical information

Basic information and explanations about our products and services can be found under the heading "Technical Information" (from page 314 onwards).

- Catalogue data
- Norms and marks of conformity
- Meaning of optical and audible signals
- Sound output
- Protection ratings
- Sales network
- Many other interesting pieces of information

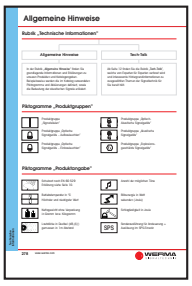

Technical Information

Looking for a specific product?

If you are looking for a specific product, the quickest way to find it is to look at our "Article Number Index" (page 338 + 339) or our "Contents" (page 3).

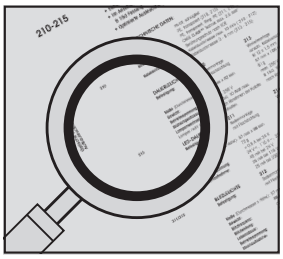

New Products

Signal Towers – Modular

WIN – Wireless Information Network for Kombi*SIGN* 70 + 71



- Economical wireless-based MDC system
- Central monitoring of a wide range of different machines via PC
- Relevant machine information at a glance

Page 43 + 24

Kombi*SIGN* reflect for Kombi*SIGN* 70 + 71

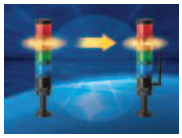

- Simple monitoring of Signal Towers out of view
- Signal tower "reflection" to a central location
- Shortening of reaction times and reduction of costs

Page 44 + 23

LED Permanent Light Element ultrabright for Kombi*SIGN* 70 + 71



- Up to 20 times brighter than conventional LED elements

Page 47 + 28

LED Flashing Light Element for Kombi*SIGN* 50



- Long-life LED flashing light element
- Low current consumption

Page 55

Siren Element with self-adjusting sound output for Kombi*SIGN* 70



- Sound output is automatically adjusted to the background noise level

Page 50

Signal Towers – Completely pre-assembled

LED Signal Tower Clean*SIGN*



- Hygienic Design
- High Protection rating IP 67/IP 69k

Page 76

LED Signal Tower Flat*SIGN*



- With curved front
- 160° signal visibility

Page 68

Design Highlights Flat*SIGN*



- Customer-specific coloured coatings
- With curved front

Page 71

Optical Signal Devices – Installation Beacons

239 LED Installation Beacon (Multicolour) for AS-Interface



- 5 colours possible in one beacon
- Triggering via AS-Interface

Page 88

816 LED Beacon (Multicolour) with USB Interface



- More than 200,000 colours possible in one beacon

Page 96

WERMA SIGNALTECHNIK

NEW

Optical Signal Devices – Free-standing Beacons

853 LED Permanent Beacon



- Quadratic form
- Possibility of traffic light combinations

Page 119

853 LED Double Flash Beacon



- Intense double flash with low power consumption
- Quadratic form

Page 136

853 LED EVS Beacon



- Attention-grabbing flickering light
- Extremely powerful signal effect
- Quadratic form

Page 137

829 LED Double Flash Beacon



- Intense double flash with low power consumption
- Extremely high light intensity

Page 142

829 LED EVS Beacon



- Attention-grabbing flickering light
- Extremely powerful signal effect

Page 143

829 LED Rotating Beacon



- Intense rotating signal effect
- Wear-free LED technology

Page 153

280 LED Double Flash Beacon



- Intense double flash with low power consumption
- Extremely high light intensity

Page 146

280 LED EVS Beacon



- Attention-grabbing flickering light
- Extremely powerful signal effect

Page 147

281 LED Obstruction Light



- LED Obstruction Light with robust glass/metal housing
- Salt water resistant

Page 130

Adaptor for tube mounting (Accessory)



- Suitable for (LED) Beacons 280, 838, 883 and 884

Page 127 onwards

Optical-Audible Signal Devices

444 LED EVS Beacon/ Multi-Tone Sounder Combination



- Sound output: 114 dB
- 32 different tones

Page 191

(LED) Beacon 890/ Multi-Tone Sounder 190 Combination



- Sound output: 110 dB
- 32 different tones

Page 195

Adaptor for tube mounting (Accessory)



- Suitable for 420 and 421 Combinations

Page 174 onwards

Audible Signal Devices

190 Multi-Tone Sounder



- Sound output: 110 dB
- 32 different tones

Page 228

Adaptor for tube mounting (Accessory)



- Suitable for Buzzer 127 and Multi-Tone Sounder 133

Page 212 + 216

Ex Signal Devices

782 Ex LED Permanent Beacon



- Suitable for use in Zone 1 and 2 (gas) and Zone 21 and 22 (dust)

Page 254

782 Ex LED Rotating Beacon



- Suitable for use in Zone 1 and 2 (gas) and Zone 21 and 22 (dust)

Page 256

Further information

The technical information, order specifications and accessories for our new products can be found on the relevant **product page**.

The **technical diagrams** of our new products are in the "Technical diagrams" section from page 264 onwards.

You are welcome to request the technical diagrams in digital form. The relevant **3D models**, **instruction leaflets** and **connection diagrams** can be obtained from us or downloaded from our homepage at any time.

The **sounds** of the audible and optical-audible signal devices can be played from our website www.werma.com.



Award-winning design

Forging good design and helping customers stand out from the competition



Competition in our globalised world is **becoming harsher** by the day whilst products are becoming increasingly interchangeable and trends short-lived. To stand out from the competition and win both new business and customer loyalty, companies must deliver more than just low prices.

A product's appearance is its calling card because it reveals a lot about **performance** and **quality.**

This is where WERMA Signaltechnik can assist you: by forging **good design** to suit your application and thus making you **unique in your customers' minds**.

Design and function must be right – from the very start



From the outset, we ensure that only select and **high-quality materials** are employed to guarantee that our products operate safely and reliably.

WERMA signal devices need **to stand out.** At the same time, they must blend into the background when non-operational. We therefore carefully create **optimum light and perfect sound** in all WERMA products – and dedicate considerable effort to making them look good.



Christian Höhler, WERMA R + D Director explains: **"Aesthetics and quality** are important. Both must enhance the products' **signalling function** in the best way possible! To this end, we frequently work with **external designers**. These designers ensure that WERMA products look attractive. Our engineers are then responsible for creating **the highest level of functionality**.

In this way we create an attractive form for the best possible signalling performance. We want our customers to benefit from their WERMA signal devices for a long time to come!"

Harmonised machine design – with signal solutions by WERMA





Do you want a harmonious look for your machine? Then talk to us.

WERMA provides
- **signal solutions** that will **fit flush to the surface** or
- that are produced in the **pattern** or
- **colour of your choice.**

The Flat*SIGN* LED signal tower can be produced to your own design (Page 71) and the Kombi*SIGN* signal tower ordered in the colour of your choice (Page 33 + 52). By creating a **unique design** your machines will become an unmistakable brand with a high level of recognition.

NEW

WERMA designer products provide many benefits

WERMA signal devices are attractive in design. In our opinion, good design means that:

- WERMA products are **aesthetically pleasing and innovative**
- **Designs for all tastes** are available to ensure our customers are in line with current trends
- WERMA signal devices are **ergonomic and function reliably**

Customers benefit from a product that:

- is perfectly suited to their application
- either **blends into the background** or **purposely stands out**
- works perfectly and looks fantastic

The end result is a high-quality housing combined with the best of signalling functions for your machine – all designed to **increase the quality and reliability** of your application.





Award-winning design by WERMA

Experts regularly assess the design quality of WERMA products. Products that meet the strict requirements are awarded the most highly-regarded **design prizes** from all over the world:

LED Signal Tower deSIGN 42

reddot design award winner 2005



Rotating Mirror Beacon 885

if product design award 2006



424/425 Combination

Focus Safety Silver 2007



444 Combination

reddot design award honourable mention 2009



LED Traffic Light 894

if product design award 2009



LED Signal Tower VarioSIGN 690

if product design award 2010





Overview Signal Towers

Modular Signal Towers

Kombi*SIGN* 71



IP 65 · Ø 70 mm
Page 16

Kombi*SIGN* 70



IP 54 · Ø 70 mm
Page 36

Kombi*SIGN* 50



IP 54 · Ø 50 mm
Page 54

Wireless-based Signal Tower Solutions

NEW

WIN –
Wireless Information Network



For Kombi*SIGN* 70 + 71
Page 43 + 24

NEW

Kombi*SIGN*
reflect

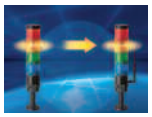

For Kombi*SIGN* 70 + 71
Page 44 + 23

GSM Transmitter Element



For Kombi*SIGN* 70 + 71
Page 45 + 26

Completely pre-assembled Signal Towers

KOMPAKT 36



IP 65 · Ø 36 mm
Page 63

KOMPAKT 71



IP 65 · Ø 70 mm
Page 64

de*SIGN* 42



IP 65 · Ø 42 mm
Page 66

NEW

Flat*SIGN*



IP 65 ·
With curved front
Page 68

NEW

Flat*SIGN*
Design Highlights



IP 65 · Customer-specific Design
Page 71

Vario*SIGN*



IP 65 ·
Innovative Design
Page 72

NEW

Clean*SIGN*



IP 67/IP 69k ·
Hygienic Design
Page 76

Sound

The sounds can be played from our website www.werma.com under the heading „Signal Towers“.

Further Information

Further informationen about “Light in signalling technology” can be found in the chapter “Tech-Talk” beginning on page 320.

Signal Towers Overview

Modular Signal Towers

- Modular system allows a completely free combination of optical and audible signal elements.
- Mechanical and electrical connection of the elements in the space of seconds using a bayonet connection system.
- Completely safe element changes (contact-voltage proof) without the need for tools.



Page 16 onwards.

Kombi*SIGN* 71



Ø 70 mm

- Protection rating IP 65
- For use in extreme conditions

Page 16 onwards.

Kombi*SIGN* 70



Ø 70 mm

- Protection rating IP 54
- For use in normal conditions

Page 36 onwards.

Kombi*SIGN* 50



Ø 50 mm

- Protection rating IP 54
- For use in normal conditions

Page 54 onwards.

NEW

Wireless-based solutions

for Kombi*SIGN* 70 + 71



WIN – Wireless Information Network



Kombi*SIGN* reflect



GSM Transmitter Element

- WIN – Wireless Information Network
- Kombi*SIGN* reflect
- GSM Transmitter Element

Page 23 onwards.

TIP

The Signal Devices Site on the internet:
With our "Configurator" you can put together a signal tower quickly and easily according to your requirements. The configurator interactively guides the user through a series of pictures and questions to create an individual signal tower solution in just a few clicks.

WERMA SIGNALTECHNIK

Completely pre-assembled Signal Towers

- Completely pre-assembled LED signal towers.
- The complete tower can be ordered using a single number, considerably simplifying the ordering process.
- LED technology with a life duration of up to 50,000 hours. The replacement of elements or light bulbs is therefore no longer necessary.

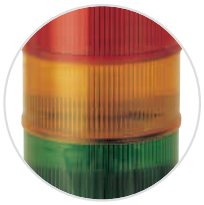

From Page 63 onwards.

KOMPAKT 36 KOMPAKT 71



Ø 36 mm / Ø 70 mm

- Protection rating IP 65
- 2 or 3 tier
- Available in 2 sizes

Page 63 + 64.

de*SIGN* 42



Ø 42 mm

- Protection rating IP 65
- 2 or 3 tier
- High-quality stainless steel housing

Page 66 onwards.

NEW

Flat*SIGN*



195 x 105 x 45 mm

- Protection rating IP 65
- With curved front
- 160°signal visability

Page 68 onwards.

Vario*SIGN*



62 x 220 x 90 mm

- Protection rating IP 65
- Electronic modularity
- Unique design

Page 72 onwards.

NEW

Clean*SIGN*



112 x 485 x125 mm

- Protection rating IP 67/69k
- For use in the food and pharmaceutical industry as well as in cleanroom applications

Page 76 onwards.

Signal Towers Kombi*SIGN*

Signals to combine – At the twist of a hand



- Signal elements in every common voltage
- Modular system allows combination as required
- High protection rating IP 54 or IP 65
- Wide range of optical and audible elements
- LED technology ensures even better visibility
- New attention-grabbing light effects (e.g. EVS)



Kombi*SIGN* 71

Protection Rating IP 65

Modular signal tower system with 70 mm diameter for use in in extreme conditions.

Not compatible with Kombi*SIGN* 70

Terminal Element



Either: improved screw terminal



Or: terminal element with CAGE CLAMP® technology



Cylindrical terminal element



See page 16.

Kombi*SIGN* 70

Protection Rating IP 54

Modular signal tower system with 70 mm diameter for use in in normal conditions.

Not compatible with Kombi*SIGN* 71

Terminal Element



Screw terminal



Conical terminal element



See page 36.

Kombi*SIGN* 50

Protection Rating IP 54

Modular signal tower system with 50 mm diameter for use on smaller machines.

Terminal Element



Screw terminal

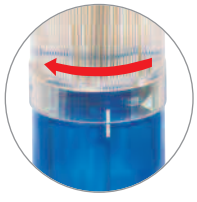

Practical bayonet fixing system tool-free bulb-change.



See page 54.

WERMA SIGNALTECHNIK

Simple operation thanks to bayonet mechanism

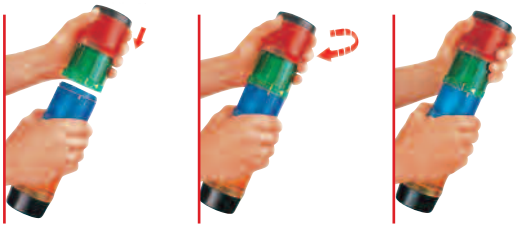

WERMA was the first signal beacon manufacturer to offer a bayonet mechanism allowing elements to be mechanically and electrically connected within seconds.

- Simple mounting and removal of the elements
- New combinations at the twist of a hand
- Tool-free bulb change

A fitting solution for every mounting requirement

The comprehensive range of accessories for Kombi*SIGN* signal towers offers solutions for the most diverse mounting needs and exceeds the industry standards in this respect.

Besides the wide choice of brackets, bases and tubes WERMA also offers unique special solutions, for example the Foldaway Base, the Tube with Clamp or the Indication Board.

You will find an overview of the entire range of accessories for Kombi*SIGN* Signal Towers on pages 60 and 61.



Kombi*SIGN* Signal Tower with Foldaway Base



Indication board for the addition of instructions

Safe and efficient connection thanks to CAGE CLAMP® technology



Terminal elements with CAGE CLAMP® technology enable leads to be quickly and easily wired, guaranteeing a secure and reliable contact.

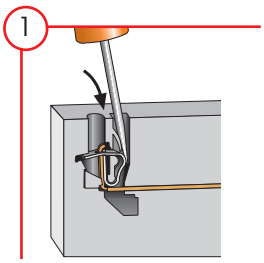

Insert screwdriver at a slight angle into opening as far as possible.

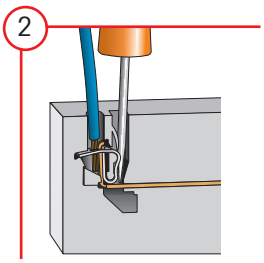

Open spring-loaded clamp with the help of the screwdriver and insert wire as far as possible

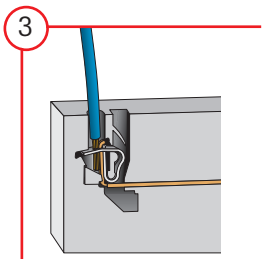

Remove screwdriver – the wire is firmly clamped.

CAGE CLAMP® is a registered trademark of WAGO Kontakttechnik GmbH.

Signal Tower Kombi*SIGN* 71

This is how you can assemble your Kombi*SIGN* 71 signal tower!

▸ STEP 1
Select the required optical or audible elements.

Many Kombi*SIGN* highlights are also available (for details see page 17).



Audible Signal Elements
- Buzzer Element
- Siren Element
- Vocal Element

Optical Signal Elements
- (LED) Permanent Light
- NEW LED Permanent Light ultrabright
- (LED) Flashing Light
- LED EVS Element
- LED Blinking Light
- LED Rotating Light

▸ STEP 2
Select the appropriate mounting option for your application.

▸ STEP 3
Select the correct terminal element for your mounting option.

Base Mounting



Improved screw terminal
Order no. **640 820 00**



Terminal element with CAGE CLAMP® technology
Order no. **640 800 00**

Tube Mounting



Improved screw terminal
Order no. **640 830 00**



Terminal element with CAGE CLAMP® technology
Order no. **640 810 00**

▸ STEP 4
Where appropriate, select a base and the desired tube length (only for tube mounting).



Tube with clamp
Order no.
960 000 18



Adaptor for single hole mounting
Order no.
960 000 25



Base with integrated tube
Order no.
975 840 10

Tube Ø 25 mm, all anodized

	Order no.
100 mm long	**975 845 10**
250 mm long	**975 840 25**
400 mm long	**975 840 40**
600 mm long	**975 840 60**
800 mm long	**975 840 80**
1000 mm long	**975 840 03**



Base for Tube, plastic
Order no. **975 840 90**



Base for Tube, metal
Order no. **975 840 91**



Foldaway Base
Order no. **960 000 30**



Tube Ø 25 mm, plastic, only for Foldaway Base, 45 mm long
Order no. **960 000 31**

▸ STEP 5
Where appropriate, select the bracket and the contact box.



Contact box for cable exit at side
Order no. **975 840 01**



Bracket for base mounting
Order no. **960 000 02**



Bracket for 1-sided mounting
Order no. **975 840 85**



Bracket for 2-sided mounting
Order no. **975 840 86**



Contact box for cable exit at side
Order no. **975 840 01**



Contact box with magnetic base and cable exit at side
Order no. **975 840 04**



Bracket for base mounting with concealed cable entry
Order no. **960 000 14**



Bracket for tube mounting
Order no. **960 000 01**

TIP

The Signal Devices Site on the Internet:
www.werma.com

With our new **signal tower configurator** you can put together your own individual signal tower.

WERMA SIGNALTECHNIK

The Highlights for Kombi*SIGN* 71

NEW

WIN – Wireless Information Network



- Economical wireless-based Machine Data Collection system (MDC system)
- Central monitoring of a wide range of different machines via PC

See page 24

NEW

Kombi*SIGN* reflect



- Simple monitoring of signal towers out of view
- Signal tower "reflection" to a central location

See page 23

GSM Transmitter Element



- Malfunction signalled by signal tower is transmitted via SMS or call to a mobile phone
- Activation without the need for programming
- No additional power supply needed

See page 26

AS-Interface Element



- LEDs indicate current status
- 31 or 62 addresses
- Available with standard or A/B technology

See page 27

NEW

LED Permanent Light Element ultrabright



- Up to 20 times brighter than conventional LED elements
- Maximum brightness via intelligent LED control

See page 28

LED Flashing Light Element



- Extremely long life duration up to 50,000 hrs
- Low current consumption
- Shock-proof and vibration resistant

See page 18

LED EVS Element



- Attention-grabbing flickering light
- Extremely powerful signal effect
- Random sequence of light signals prevents acclimatisation effect

See page 29

Vocal Element



- Plays customer-specific audio files in mp3 format (sounds, alarms, music or spoken text)
- Easy programming via USB interface
- Up to 60 minutes replay capacity

See page 30

Siren Element with self-adjusting sound output



- Sound output is automatically adjusted to the background noise level
- Warning tone can be heard without being irritatingly loud

See page 31

Terminal Element with USB Interface



- Direct triggering of signal tower elements via USB Interface
- Easy activation

See page 32

Customer-specific coloured coatings



- Signal towers in customer-specific colours – complete range of RAL colours available
- Meets the demands of an increasing design orientation

See page 33

Foldaway base



- Enables signal towers to be folded down completely, even when connected
- Vertical alignment of signal towers even on sloping surfaces

See page 35

Signal Tower Kombi*SIGN* 71



Bracket (accessory)



Base with tube (accessory)

- **High protection rating IP 65**
- **Signal tower system 70 mm Ø with modular construction**
- **Improved illumination**
- **Flexible combination of optical and audible elements**

TECHNICAL SPECIFICATIONS:

Dimensions (Ø x Height):	Terminal element: 70 mm x 26.5 mm Light element: 70 mm x 65 mm Audible element: 70 mm x 72/79/111 mm
Housing:	Terminal element: PA fibreglass, high-impact Cap: PC
Lens:	PC, transparent Audible and ASI elements: PC
Fixing:	Base mounting Tube mounting, for tube Ø 25 mm Bracket mounting (accessory)
Socket:	Bayonet, B15d, for bulbs max. 7 W
Connection:	CAGE CLAMP® technology max. 2.5 mm² or screw terminal max. 2.5 mm² Contact protection according to VDE
Cable entry:	Cable diameter max. 14 mm
Element seal:	Pre-mounted with each module
Protection rating:	Light elements: IP 65 Audible elements: IP 65 (Order no. 645 830 55 = IP 40)
Number of modules possible:	Max. 5/max. 10 elements with 2-sided bracket
Permanent light element	12 - 240 V≂ Bulb not included in assembly.
LED Permanent light element Current consumption:	24 V≂ 115 V~ 230 V~ < 30 mA < 20 mA < 20 mA
NEW **LED Permanent light element ultrabright** Life duration: Current consumption: Up to 20 times brighter than conventional LED beacons.	24 V⎓ Up to 50,000 hrs Max. 190 mA
Flashing light element (Xenon) Life duration: Current consumption: Reduced for AS-Interface: Flash frequency:	24 V⎓ 115 V~ 230 V~ 4 x 10^6 flashes 125 mA 22 mA 15 mA 80 mA c. 1 Hz
LED Flashing light element Life duration: Current consumption: Flash frequency:	24 V⎓ 50,000 hrs < 30 mA (red/yellow) < 25 mA (green/clear/blue) c. 1 Hz (Double Flash)
LED EVS* element Current consumption: * EVS = Enhanced Visibility System	24 V⎓ 350 mA (red/yellow) 250 mA (green/clear/blue)
LED Blinking light element Current consumption: Blink frequency:	24 V≂ 115 V~ 230 V~ 25 mA 25 mA 25 mA c. 1 Hz
LED Rotating light element Current consumption: Rotation frequency:	24 V≂ 70 mA c. 120 r.p.m. Improved light effect

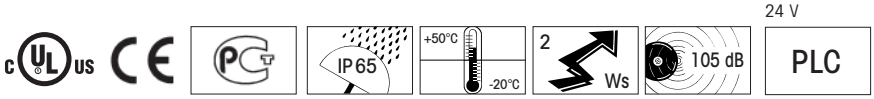

WERMA SIGNALTECHNIK



(LED) Permanent/Flashing element



Permanent light, clear with info



LED EVS element



Life duration up to 50,000 hrs

LED element



ORDER SPECIFICATIONS OPTICAL ELEMENTS:

Permanent light element		12-240 V≂		
red		**641 100 00**		
green		**641 200 00**		
yellow		**641 300 00**		
clear		**641 400 00**		
blue		**641 500 00**		
Bulb not included in assembly. Accessories see page 22.				
LED Permanent light element		24 V≂	115 V~	230 V~
red		**644 100 75**	**644 100 67**	**644 100 68**
green		**644 200 75**	**644 200 67**	**644 200 68**
yellow		**644 300 75**	**644 300 67**	**644 300 68**
clear		**644 400 75**	**644 400 67**	**644 400 68**
blue		**644 500 75**	**644 500 67**	**644 500 68**
NEW **LED Permanent light element ultrabright**		24 V⎓		
red		**644 180 55**		
green		**644 280 55**		
yellow		**644 380 55**		
clear		**644 480 55**		
blue		**644 580 55**		
Flashing light (Xenon)	24 V⎓ (ASI)	24 V⎓	115 V~	230 V~
red	**643 110 55**	**643 100 55**	**643 100 67**	**643 100 68**
green	**643 210 55**	**643 200 55**	**643 200 67**	**643 200 68**
yellow	**643 310 55**	**643 300 55**	**643 300 67**	**643 300 68**
clear	**643 410 55**	**643 400 55**	**643 400 67**	**643 400 68**
blue	**643 510 55**	**643 500 55**	**643 500 67**	**643 500 68**
LED Flashing light element		24 V⎓		
red		**644 120 55**		
green		**644 220 55**		
yellow		**644 320 55**		
clear		**644 420 55**		
blue		**644 520 55**		
LED EVS element		24 V⎓		
red		**644 140 55**		
green		**644 240 55**		
yellow		**644 340 55**		
clear		**644 440 55**		
blue		**644 540 55**		
LED Blinking light element		24 V≂	115 V~	230 V~
red		**644 110 75**	**644 110 67**	**644 110 68**
green		**644 210 75**	**644 210 67**	**644 210 68**
yellow		**644 310 75**	**644 310 67**	**644 310 68**
clear		**644 410 75**	**644 410 67**	**644 410 68**
blue		**644 510 75**	**644 510 67**	**644 510 68**
LED Rotating light element		24 V≂		
red		**644 130 75**		
green		**644 230 75**		
yellow		**644 330 75**		
clear		**644 430 75**		
blue		**644 530 75**		

Compare the prices and advantages of an LED Flashing light

Improved light effect

Further voltages on request.

TECHNICAL DIAGRAMS:

see page 277 onwards

640 Signal Tower Kombi*SIGN* 71





Audible element



Siren element with
self-adjusting sound output



Terminal element with cap



Vocal element



GSM transmitter element

ORDER SPECIFICATIONS AUDIBLE ELEMENTS:

Buzzer element 85 dB, 25 mA, IP 65, Continuous or pulse tone	24 V≂ **645 800 75**	115 V~ **645 800 77**	230 V~ **645 800 68**
Siren element 105 dB, 150 mA, IP 40 Continuous tone alternating	24 V⎓ **645 830 55** no UL approval		
Multi-functional Siren 100 dB, IP 65, 8 different tones, adjustable sound output	24 V≂ /80 mA **645 820 75**	115 V~/40 mA **645 820 67**	230 V~/40 mA **645 820 68**
Multi-functional Siren, **can be triggered externally** 100 dB, 80 mA, IP 65, 7 diff. tones can be triggered externally, adjustable sound output, number of tones depending on the number of optical elements.	24 V⎓ **645 850 55**		
Siren element with **self-adjusting sound output** Technical specifications see page 31.	24 V⎓ **645 810 55**		

ORDER SPECIFICATIONS TERMINAL ELEMENTS :

Terminal element for tube mounting including cap	CAGE CLAMP® **640 810 00**	Screw terminal **640 830 00**
Terminal element for bracket or base mounting including cap and seal	**640 800 00**	**640 820 00**
Terminal element with **USB Interface** (for tube mounting) Technical specifications see page 32.	**640 840 00**	

ORDER SPECIFICATIONS KOMBI*SIGN*-HIGHLIGHTS:

NEW **WIN system for Kombi*SIGN* 71** Technical specifications see page 24.	**860 640 01**	
NEW **WIN complete for Kombi*SIGN* 71** Technical specifications see page 24.	**860 640 03**	
NEW **WIN slave for Kombi*SIGN* 71** Technical specifications see page 24.	**860 640 02**	
NEW **Kombi*SIGN* 71 reflect** Technical specifications see page 23.	**861 640 01**	
GSM Transmitter Element **for Kombi*SIGN* 71** Technical specifications see page 26.	24 V⎓ **646 700 55**	
Vocal Element **for Kombi*SIGN* 71** Technical specifications see page 30.	24 V⎓ **645 840 55**	
AS-Interface Element **for Kombi*SIGN* 71** Technical specifications see page 27.	Standard Slave 24 V⎓ **646 830 55**	A/B-Slave 24 V⎓ **646 810 55**

WERMA SIGNALTECHNIK

Accessories for Signal Tower Kombi*SIGN* 71



ORDER SPECIFICATIONS ACCESSORIES:

Contact box for cable exit at side, with mounting material	**975 840 01**
Contact box with magnetic base and cable exit at side	**975 840 04**
Bracket for tube mounting with cable gland	**960 000 01**
Bracket for surface mounting with cable gland	**960 000 02**
Bracket for base mounting with concealed cable entry, incl. rubber seals	**960 000 14**
Bracket for 1-sided mounting, incl. rubber seals	**975 840 85**
Bracket for 2-sided mounting, incl. rubber seals	**975 840 86**
Tube with clamp, Ø 25 mm 250 mm long, with cable gland	**960 000 18**
Tube Ø 25 mm, all anodized aluminium	
100 mm long	**975 845 10**
250 mm long	**975 840 25**
400 mm long	**975 840 40**
600 mm long	**975 840 60**
800 mm long	**975 840 80**
1000 mm long	**975 840 03**
Foldaway Base incl. rubber seals, suitable for tube, Ø 25 mm, all anodized aluminium (Technical specifications see page 35)	**960 000 30**
Tube Ø 25 mm, plastic for mounting the Terminal Element directly on the Foldaway Base	**960 000 31**
Base for tube mounting Ø 25 mm, plastic, incl. rubber seal	**975 840 90**
Base for tube mounting Ø 25 mm, metal, incl. rubber seal, recommended for tube lengths of 400 mm and longer	**975 840 91**
Base with integrated tube, Ø 25 mm, 110 mm long, plastic, incl. rubber seal	**975 840 10**
Adaptor for tube mounting, Ø 25 mm / 1/2″ NPT thread	**975 840 02**
Adaptor for single hole mounting Ø 25 mm, M 18	**960 000 25**
Cable gland for surface mounting M 16 x 1.5 mm	**960 000 04**

TECHNICAL DIAGRAMS:

see page 292 onwards

Accessories for Signal Tower Kombi*SIGN* 71

IP 65

ORDER SPECIFICATIONS ACCESSORIES:



Bulb BA15d, total length max. 42 mm
(for permanent light 641)

12 V, 5 Watt	**955 840 34**
24 V, 5 Watt	**955 840 35**
30 V, 5 Watt	**955 840 32**
115 V, 5 Watt	**955 840 57**
230 V, 5 Watt	**955 840 38**



LED bulb BA15d, total length max. 42 mm
(for permanent light 641)

Voltage	24 V≂	115 V~	230 V~
Current consumption	< 45 mA	< 15 mA	< 15 mA
red	**956 100 75**	**956 100 67**	**956 100 68**
green	**956 200 75**	**956 200 67**	**956 200 68**
yellow	**956 300 75**	**956 300 67**	**956 300 68**
white	**956 400 75**	**956 400 67**	**956 400 68**
blue	**956 500 75**	**956 500 67**	**956 500 68**



Indication Board

- Indication Board for one to five modules
- Simple mounting onto signal tower tube
- Ample space for written information
- Simply break off unwanted segments

Dimensions of indication board (W x H):	153 x 345 mm
Surface area per section (W x H):	c. 140 x 50 mm
Material:	PMMA
Assembly:	Indication board (5 sections) incl. mounting material
Mounting:	Fixing only possible on 25 mm diameter tube
Indication board	**960 000 05**

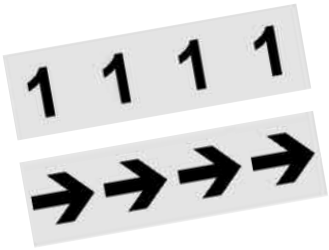

Info transparencies: To place inside optical elements, not for use in Flashing Light, LED EVS, LED Flashing Light and LED Permanent Light Element ultrabright.

neutral	**975 840 49**	number „6"	**975 840 56**
number „0"	**975 840 50**	number „7"	**975 840 57**
number „1"	**975 840 51**	number „8"	**975 840 58**
number „2"	**975 840 52**	number „9"	**975 840 59**
number „3"	**975 840 53**	number „10"	**975 840 92**
number „4"	**975 840 54**	arrow	**975 840 62**
number „5"	**975 840 55**		



ADDITIONAL INFORMATION:

You will find an overview of the entire range of accessories for Kombi*SIGN* Signal Towers on pages 60 and 61.

TECHNICAL DIAGRAMS:

see page 292 onwards

WERMA SIGNALTECHNIK

861 KombiSIGN reflect for KombiSIGN 71

NEW



The slave sends the status directly to the master, and reflects the status of the signal tower installed on the machine



Remote transmission via wireless signal with a maximum range of up to 300 m (unobstructed line of sight)



Simply fit the KombiSIGN reflect slave to the signal tower on the machine

- Simple monitoring of signal towers out of view
- Signal tower "reflection" to a central location
- Shortening of reaction times and reduction of costs
- KombiSIGN reflect is integrated into existing WERMA signal towers
- No additional wiring costs
- Simple commissioning due to pre-configured modules

TECHNICAL SPECIFICATIONS:

Slave	
Dimensions (Ø x Height):	70 mm x 65.5 mm
Housing:	PC, black
Connection:	Bayonet
Operating voltage:	24 V ≂
Current consumption:	40 mA
Master	
Dimensions (Ø x Height):	70 mm x 65.5 mm (without antenna)
Housing:	PC, black
Connection:	Bayonet
Operating voltage:	24 V ⎓
Current consumption:	40-90 mA
Wireless connection	
ISM frequency:	868 MHz (KombiSIGN reflect conforms to the EU's EN 300220 harmonised standard and can thus be used in all EU member countries. Further countries upon request.)
Transmission range:	Up to 300 m (unobstructed line of sight)

ORDER SPECIFICATIONS:

KombiSIGN 71 reflect	**861 640 01**

ADDITIONAL INFORMATION:

Signal tower "reflection"
WERMA Signaltechnik provides a simple solution for the remote wireless monitoring of machinery. The new "KombiSIGN reflect" kit can be integrated into existing signal towers which are already installed on your machines. KombiSIGN reflect "reflects" the status of the machine to a signal tower within your line of sight.

This enables you to wirelessly monitor machines situated at a greater distance and respond quickly to malfunctions. With KombiSIGN reflect, even machines which where not previously network-capable can now be remotely monitored.

Further informationen can be found in the chapter "Tech-Talk" on page 324.

TECHNICAL DIAGRAMS:

see page 289

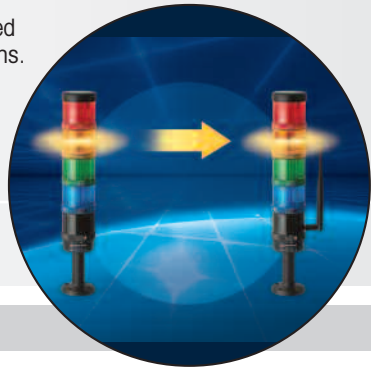

Simple monitoring of signal towers out of view

CE IP65 +50°C -20°C PLC

860 WIN* for Kombi*SIGN* 71

NEW



"WIN system" is immediately ready for use: Fit the slaves in the existing signal towers and connect the master to the PC

- **Economical wireless-based Machine Data Collection system (MDC system)**
- **Central monitoring of a wide range of different machines via PC**
- **Relevant machine information at a glance**
- **Reduction of reaction times, repair and maintenance requirements and costs**
- **No additional wiring as existing WERMA signal towers can be used**
- **Downtime analysis**



The all inclusive kit for Kombi*SIGN* 71: "WIN complete" consists of three pre-configured signal towers and the master



Expandable at any time: With additional "WIN slaves" up to 50 machines can be integrated into the network

TECHNICAL SPECIFICATIONS:

Patent pending

WIN slave	
Dimensions (Ø x Height):	70 mm x 65.5 mm
Housing:	PC, black
Connection:	Bayonet
Operating voltage:	24 V ≂
Current consumption:	40 mA
WIN master	
Dimensions (L x H x W):	76 mm x 30 mm x 80 mm (without antenna)
Housing:	ABS, black
Connection:	Via USB
Operating voltage:	Via USB
Current consumption:	< 100 mA
Suitable for:	Windows 2000, Windows XP, Windows Vista, Windows 7
Wireless connection	
ISM frequency:	868 MHz (WIN conforms to the EU's EN 300220 harmonised standard and can thus be used in all EU member countries. Further countries upon request.)
Transmission range:	Up to 300 m (unobstructed line of sight) Every slave simultaneously functions as a "repeater", enabling the transmission range to be significantly increased.

WIN complete

With the all inclusive kit "WIN complete" you can immediately start monitoring up to three machines. All you have to do is mount the signal towers from the kit onto your machines. After installing the supplied software on to your PC you can immediately start monitoring the status of your machines.

Assembly:	WIN master, 3 WIN slaves for Kombi*SIGN* 71 (pre-configured), 3 Kombi*SIGN* 71 signal towers (LED permanent light elements in red, yellow and green, terminal element, base with integrated tube), software

WIN system

With "WIN system" the user has even more choice: The kit consists of a WIN master including the software, a USB cable and three pre-configured WIN slaves.
The slaves are fitted to the existing WERMA signal towers which need to be monitored. Or you can order your own signal towers from WERMA's wide range of Kombi*SIGN* products - enabling you to combine audible elements, different light effects, colours and mounting options as required.

Assembly:	WIN master, 3 WIN slaves for Kombi*SIGN* 71 (pre-configured), Software



With the supplied software, users can wirelessly monitor their machinery via PC



The software displays the status of the signal towers integrated into wireless network

ORDER SPECIFICATIONS:

WIN system for Kombi*SIGN* 71	**860 640 01**
Assembly: WIN master, 3 WIN slaves Kombi*SIGN* 71 (pre-configured), Software	
WIN complete for Kombi*SIGN* 71	**860 640 03**
Assembly: WIN master, 3 WIN slaves for Kombi*SIGN* 71 (pre-configured), 3 Kombi*SIGN* signal towers (LED permanent light elements in red, yellow and green, terminal element, base with integrated tube), software	
WIN slave for Kombi*SIGN* 71	**860 640 02**
To expand WIN complete or WIN system. Both networks can be expanded to up to 50 WIN slaves per network as required.	

ADDITIONAL INFORMATION:

*** WIN** = Wireless Information Network

The "Wireless Information Network", "WIN" for short, is a simple MDC system (Machine Data Collection system).

WIN enables you to centrally monitor and evaluate the performance of up to fifty machines of varying ages and functions via wireless technology. Even machines which were not previously network-capable can now be integrated into networks.

Software for monitoring and analysing the machine operating status
With the supplied software, users can wirelessly monitor machinery on their Pc. They can search for faults or analyse the operating status, thus raising the efficiency and productivity of their machines.

Examples:

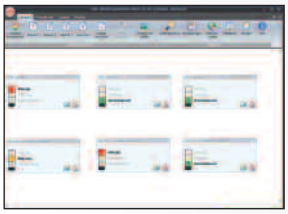

Module 1: Status indication of the networked signal towers

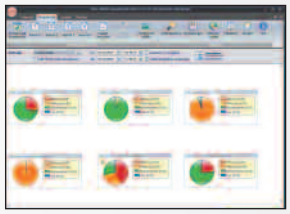

Module 2: Productivity per machine

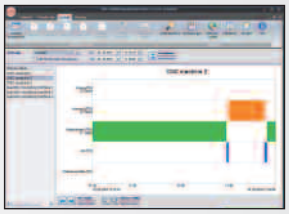

Module 3: Failure analysis over time

Further informationen can be found in the chapter „Tech-Talk" beginning on page 320.

TECHNICAL DIAGRAMS:

see page 288

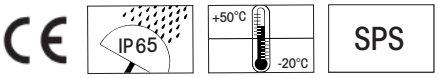

646 GSM Transmitter Element for KombiSIGN 71

Patent approved





Also suitable for US frequencies

- Unique Signal Tower solution
- GSM transmitter element can be simply integrated into an existing signal tower
- Activation without the need for programming
- Malfunction signalled by signal tower is transmitted via SMS to a mobile phone
- No additional power supply
- Also suitable for US frequencies (Quadband)

TECHNICAL SPECIFICATIONS:

Dimensions (Ø x Height):	70 mm x 65.5 mm (without antenna)
Housing:	PC
Current consumption:	50 mA
Max. current draw (momentary):	450 mA
GSM frequency:	850, 900, 1800/1900 MHz
Plug-in slot for SIM card:	Integrated (SIM card is not included in assembly)
Antenna connection:	FME plug connector (bracket antenna included)

ORDER SPECIFICATIONS:

GSM Transmitter Element	24 V ⎓
	646 700 55

TECHNICAL DIAGRAMS:

see page 278

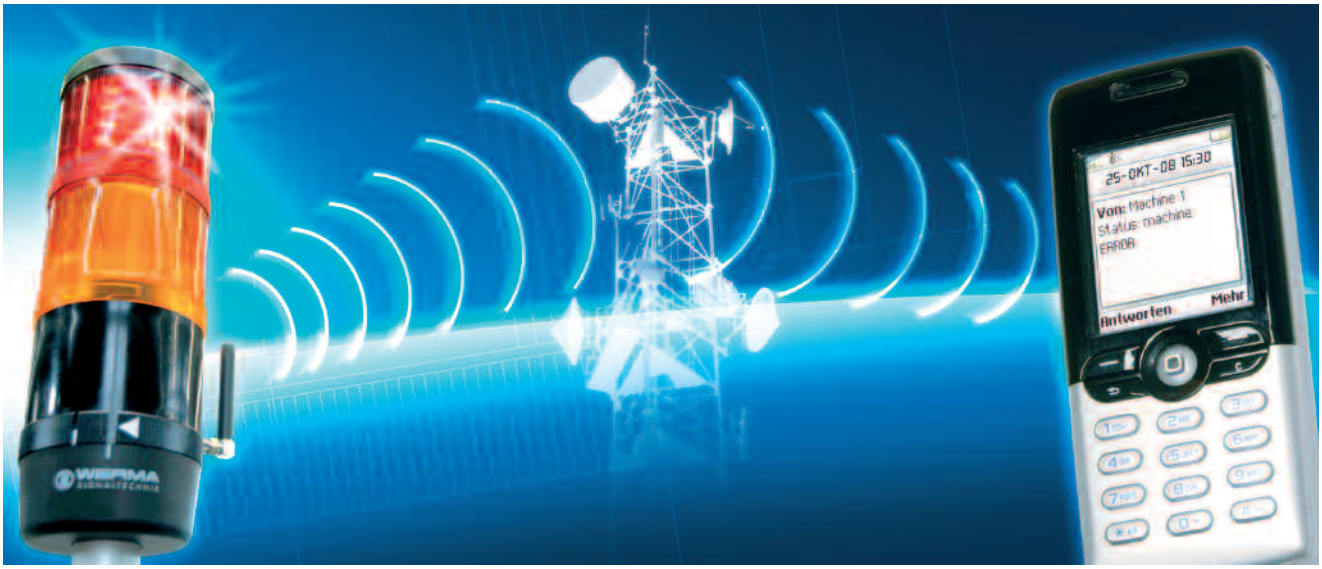

Class 2

AS-Interface Element for Kombi*SIGN* 71



Cable not included in assembly



LEDs display the current status

- LEDs indicate current status
- 31 or 62 addresses
- Available with standard or A/B technology
- Voltage supply switchable from internal bus supply to additional external voltage supply
- With addressing socket

TECHNICAL SPECIFICATIONS:

	Standard Slave	A/B-Slave
Number of addresses:	Max. 31	Max. 62
Number of signal elements:	Max. 4	Max. 3
IO-Code:	8	8
ID-Code:	F	A
ID2-Code:	–	E
Outputs:	4 semiconductor relays	3 semiconductor relays
Approved in accordance with:	Spec. V 3.0	Spec. V 3.0

Specif. Power supply	
AS-Interface Element:	Via bus conduction
Operating voltage:	25 V ... 31.6 V according to the AS-Interface specification
Reverse battery protection:	Integrated
Watchdog:	Integrated
Additional external voltage:	24 V ⎓

	With internal add. voltage	With external add. voltage
Current carrying cap. Σ Imax:	200 mA	200 mA per signal element
Current consumption max:	250 mA	75 mA
Voltage at signal element:	18 V - 31 V	24 V +/- 10%
Short circuit/overload protection:	Integrated	Pre-fuse M 1.6 A

ORDER SPECIFICATIONS:

AS-Interface Element	Standard Slave	A/B-Slave
	646 830 55	**646 810 55**

ADDITIONAL INFORMATION:

The Kombi*SIGN* Signal Towers 70 and 71 with AS-Interface Element are capable of total communication: Through simple integration of an AS-Interface Element the actuators are connected to the networking system Actuator-Sensor-Interface – this considerably reduces complex wiring. The necessary power supply (supply via bus or external) can be selected with a switch. This element is mounted as the first tier of the individual signal tower directly on top of the terminal element.
(Further Information see page 319).

TECHNICAL DIAGRAMS:

see page 278

Class 2

Standard Slave: Approval No. 66301

A/B-Slave: Approval No. 66202

644 LED Permanent Light Element ultrabright for Kombi*SIGN* 71



- **Up to 20 times brighter than conventional LED elements**
- **Extremely good visibility – even in direct sunlight**
- **Life duration up to 50,000 hrs**
- **Maximum brightness via intelligent LED control**
- **Low current consumption and maintenance-free**
- **Shock-proof and vibration-resistant**

Life duration up to 50,000 hrs

TECHNICAL SPECIFICATIONS:

Dimensions (Ø x Height):	70 mm x 65.5 mm
Lens:	PC, transparent
Seal:	Pre-mounted with each element
Number of modules possible:	5, with 2-sided bracket max. 10
Current consumption:	Max. 190 mA



Maximum brightness via intelligent LED control

ORDER SPECIFICATIONS:

LED Permanent light element ultrabright	24 V ⎓
red	**644 180 55**
green	**644 280 55**
yellow	**644 380 55**
clear	**644 480 55**
blue	**644 580 55**

ADDITIONAL INFORMATION:

Sophisticated triggering
Thanks to its sophisticated triggering, the innovative LED element "ultrabright" is up to 20 times brighter than conventional LED elements – making it almost certainly the brightest permanent light that the world of signalling technology currently has to offer.

Furthermore, the intelligent electronics ensure that the LEDs operate at maximum brightness, depending on the ambient and operating temperatures. The "ultrabright" LED element is therefore always working at its optimum, and the energy-saving LED technology ensures that power consumption is kept to a minimum.

Further informationen can be found in the chapter "Tech-Talk" beginning on page 325.

TECHNICAL DIAGRAMS:

see page 277



The high level of brightness guarantees good visibility – even in direct sunlight

CE IP65 +50°C -20°C PLC

WERMA SIGNALTECHNIK

LED EVS* Element for Kombi*SIGN* 71

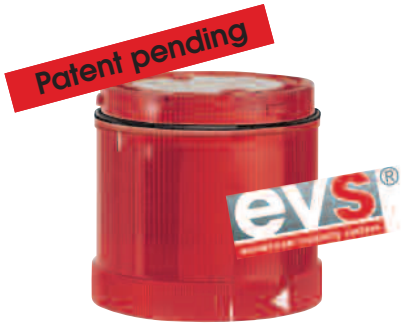

- Attention-grabbing flickering light
- Developed on a neurobiological basis
- Extremely powerful signal effect
- Random sequence of light signals prevents acclimatisation effect
- For signalling extremely hazardous situations and the need for immediate action

TECHNICAL SPECIFICATIONS:

Life duration up to 50,000 hrs

Dimensions (Ø x Height):	70 mm x 65 mm
Lens:	PC, transparent
Seal:	Pre-mounted with each element
Number of modules possible:	5, with 2-sided bracket max. 10
Current consumption:	red / yellow: 200 mA green / blue / clear: 150 mA



Integrated into the Kombi*SIGN* Signal Towers, the new LED EVS Element generates a highly attention-grabbing signal

ORDER SPECIFICATIONS:

Voltage	24 V ⎓
red	**644 140 55**
green	**644 240 55**
yellow	**644 340 55**
clear	**644 440 55**
blue	**644 540 55**

ADDITIONAL INFORMATION:

evs® enhanced visibility system

*** EVS** = Enhanced Visibility System
Further informationen can be found in the chapter "Tech-Talk" on page 326.

EVS – Attention-grabbing light effect on neurobiological basis
The flickering of neon lamps and comparable light effects are highly effective at attrating our attention. The neurobiological basis of this phenomenon is explained by a university scientist as follows: Light signals are processed in the human brain, not directly in the eye.

In order to be consciously registered there, incoming stimuli first have to pass through a form of filter. This filter has a "protective" function. During sleep it reduces disturbing stimuli to a minimum and assists in "overlooking" regular or continuous signals.

EVS – Flickering light without acclimatisation effect
On the basis of this understanding, WERMA's R+D department set out to find a flickering light with a high degree of effectivity in attracting attention. In a multistage laboratory experiment 20 test candidates were asked to judge a series of different light signals and to determine the most eye-catching light. The result of the study was a stochastic flickering light with optimal attention-grabbing characteristics: EVS – Enhanced Visibility System! The light effect of this system is completely new and distinguishes it from all previous systems.

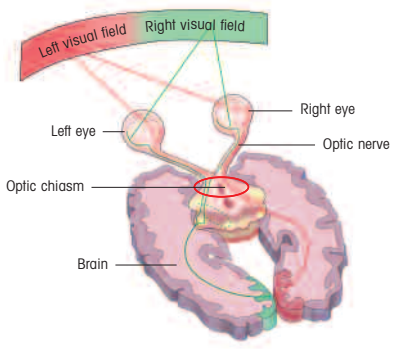

The way in which the brain processes visual stimuli formed the basis for the development of the new EVS technology

TECHNICAL DIAGRAMS:

see page 277

CE IP65 +50°C -20°C PLC

645 Vocal Element for KombiSIGN 71

German utility model approved



- Plays customer-specific audio files in mp3 format (sounds, alarms, music or spoken text)
- Easy programming via USB interface
- Excellent sound quality
- Up to 60 minutes replay capacity
- Positive and negative logic possible
- Adjustable sound output

TECHNICAL SPECIFICATIONS:

mp3 compatible

Dimensions (Ø x Height):	70 mm x 111 mm
Housing:	PC
Current consumption:	400 mA
Integrated memory:	Approx. 60 min. of replay capacity
Number of sequences recordable:	15, depending on the number of signal elements
Number of additionally signal elements:	Max. 3
Programming:	Via USB connection cable from PC
Sound output:	Adjustable, max. 85 dB

Assembly includes USB connection cable.

ORDER SPECIFICATIONS:

Vocal element	24 V ⎓
	645 840 55

ACCESSORIES:

Headset with microphone	**960 645 01**

TECHNICAL DIAGRAMS:

see page 278



The vocal element can be combined with up to 3 signal elements.



Individual messages can be recorded via the headset with microphone directly on to the PC (accessory, specific version may vary from photo)



c UL us CE PG 150 g IP65 +50°C -20°C max 85 dB

WERMA SIGNALTECHNIK

645 Siren Element with self-adjusting sound output for Kombi*SIGN* 71

Patent approved



- **Automatic sound output adjustment between 80 and 100 dB**
- **Sound output is c. 5 dB louder than the background noise level**
- **Continual measurement of the ambient noise level**
- **Ideal for applications with changing ambient sound levels**

TECHNICAL SPECIFICATIONS:

Dimensions (Ø x Height):	70 mm x 111 mm
Housing:	PC
Tone type:	Pulse tone
Tone frequency:	2.5 KHz
Sound output:	80 dB - max. 100 dB

Loud enough yet not disturbing!

ORDER SPECIFICATIONS:

Voltage:	24 V ⎓
Current consumption:	< 150 mA
	645 810 55



ADDITIONAL INFORMATION:

The siren element adjusts its sound output through continual measurement of the ambient noise level. The emitted tone is c. 5 dB louder than the background noise level. The warning signal can always be heard without being irritatingly loud for people in the sounder's vicinity.

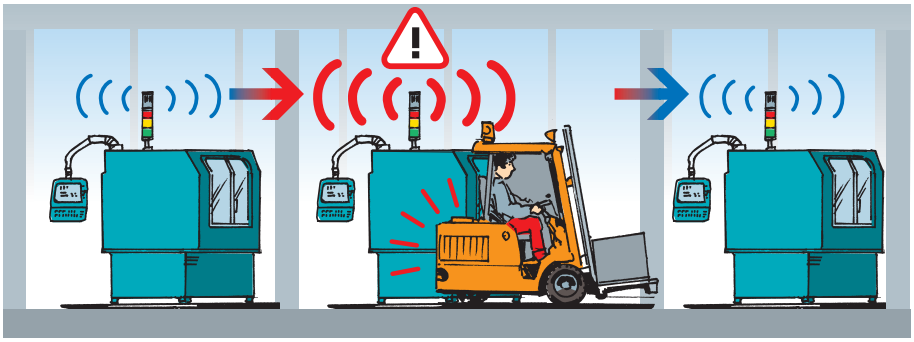

TECHNICAL DIAGRAMS:

see page 278

640 Terminal Element with USB Interface for Kombi*SIGN* 71



- **Direct triggering of signal tower elements via USB Interface**
- **Easy activation**
- **Can be combined with up to 4 signal elements**
- **Assembly includes installation software and USB connection cable**
- **No additional power supply necessary**
- **No additional hardware needed**



Direct triggering of the signal tower via USB Interface

TECHNICAL SPECIFICATIONS:

Dimensions (Ø x Height):	70 mm x 26.5 mm
Material:	PA-GF, shock resistant
Fixing:	Tube mounting
Connection:	USB-Bus Assembly includes installation software and USB connection cable (AWG 22), 2 m long Maximum permitted length of USB cable (min. AWG 22): 7 m
Current carrying capacity Imax:	100 mA

ORDER SPECIFICATIONS:

Terminal element USB	24 V ⎓ **640 840 00**

ACCESSORIES:

Base with integrierted tube	**975 840 10**
Tube mounting with base for tube (metal)	**975 840 91**

Tube Ø 25 mm

100 mm long	**975 845 10**	250 mm long	**975 840 25**
400 mm long	**975 840 40**	600 mm long	**975 840 60**
800 mm long	**975 840 80**	1000 mm long	**975 840 03**

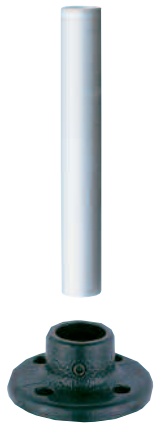

Base for tube (metal) and tube Ø 25 mm (accessories)

ADDITIONAL INFORMATION:

Direct triggering via USB Interface
In many applications, it is necessary to indicate operating states or faults by means of an optical signal. A PLC or machine controller is not available in all areas; PCs are often also connected to control the machines. The optimal solution for this is the terminal element with USB interface for Kombi*SIGN* 70, 71 and Kompakt 71.

This innovation in the field of signal towers is controlled directly from the PC and can therefore be put into operation easily and in an uncomplicated manner. Neither a separate power supply nor additional hardware is required because the terminal element with USB interface is based on a standard USB interface.

TECHNICAL DIAGRAMS:

see page 277



WERMA SIGNALTECHNIK

Kombi*SIGN* 71 in customer-specific coloured coatings



- Signal towers in customer-specific colours
- Meets the demands of an increasing design preference
- Simple ordering procedure
- Complete range of RAL colours available
- High protection rating IP 65

TECHNICAL SPECIFICATIONS:

Dimensions Terminal Elements (Ø x Height):	70 mm x 26.5 mm
Housing Terminal Elements:	PA-GF, fibreglass, high-impact, Cap: PC
Connection:	CAGE CLAMP® technology max. 2.5 mm² Contact protection according to VDE
Cable entry:	Cable diameter max. 14 mm
Number of modules possible:	Max. 5
Minimum order quantity:	10 pieces
Delivery time:	By arrangement
Colour Finish:	Matt or gloss

Please state the required RAL number

ORDER SPECIFICATIONS TERMINAL ELEMENTS:

	CAGE CLAMP®	Screw terminal
Terminal element for tube mounting, coated, including cap	**640 710 00**	**640 730 00**
Terminal element for bracket or base mounting, coated including cap and seal	**640 700 00**	**640 720 00**

ACCESSORIES:

Base with integrated tube, coated Ø 25 mm, 110 mm long, plastic, incl. rubber seals	**960 000 24**
Bracket for 1-sided mounting, coated, incl. rubber seals	**960 000 22**

ADDITIONAL INFORMATION:

Please state the required RAL number and colour finish (matt or gloss) with each of your orders. Slight colour deviations are possible.



TECHNICAL DIAGRAMS:

see page 277

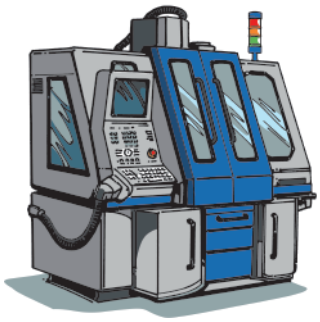

The Signal Towers are designed to harmonise with the colour of the customer's product design, guaranteeing a uniform appearance



The Kombi*SIGN* Signal Towers 71 can be coated in any colour within the RAL spectrum

960

Interface Box for Kombi*SIGN* 71



Assembly:
Interface Box and terminal element for signal tower Kombi*SIGN* 71





Assembly without laptop and signal tower elements

- Direct triggering from PC via RS 232 or RS 485 interfaces
- Programming of various drives via serial interface
- Triggering of up to 4 independent elements of a Kombi*SIGN* signal tower
- Up to 127 signal towers can be adressed (RS 485)
- Monitoring of each element possible
- Versions for Bus systems available on request

TECHNICAL SPECIFICATIONS:

Dimensions of the Interface box (L x H x W):	80 x 66 x 82 mm	
Material:	ABS	
Drive:	24 V ⎓	
Interfaces:	RS 232, RS 485	
Assembly:	**960 000 16**	**960 000 17**
	• Interface box	• Interface box
	• Terminal element	• Terminal element
	• 2 cable glands M16	• 1 cable gland M16
		• Network appliance with cable
		• Connection cable RS 232, 2 m long, with Sub-D 9-pin and socket for power supply
		• CD with demonstration programme
		• Programming handbook

ORDER SPECIFICATIONS:

Interface box	**960 000 16**
Interface box incl. accessories	**960 000 17**

TECHNICAL DIAGRAMS:

see page 292 + 293

160 g | IP65 | +50°C -20°C

WERMA SIGNALTECHNIK

Foldaway Base for Kombi*SIGN* 71

German utility model approved



Maximum stability even with strong shocks and vibrations thanks to the locking mechanism



When transporting the machine, the signal tower can be folded away in a few simple steps



Vertical alignment of signal towers even on sloping surfaces

- The signal tower can be folded away while still connected
- Minimises packaging costs and optimises machine transportation
- Simple mounting and cable entry – for up to Ø 14 mm
- Vertical alignment of signal towers even on sloping surfaces
- Positioning in 7.5° steps, markings for 30, 45, 60 or 90 degrees

TECHNICAL SPECIFICATIONS:

Dimensions (Ø x Height):	70 mm x 117 mm
Material:	PA-GF
Cable diameter:	Max. 14 mm
Assembly:	Incl. rubber seals
Fixing:	Vertical, horizontal Positioning in 7.5° steps
Suitable for:	Tube, Ø 25 mm, all anodized aluminium, not included in assembly (accessory)

ORDER SPECIFICATIONS:

Foldaway base for Kombi*SIGN* 71	**960 000 30**

ACCESSORIES:

Tube Ø 25 mm, plastic 45 mm long, for direct mounting of the Terminal Element onto the Foldaway Base	**960 000 31**
Tube Ø 25 mm, all anodized aluminium, see page 21	
Cable gland M 16 x 1.5 mm	**960 000 04**

QUICK AND SIMPLE MOUNTING:

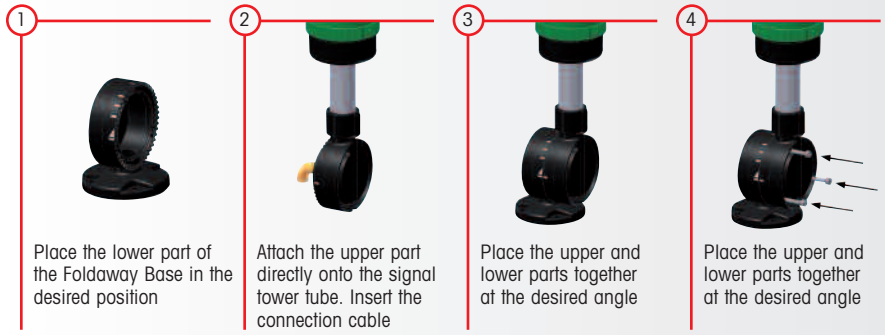

1. Place the lower part of the Foldaway Base in the desired position
2. Attach the upper part directly onto the signal tower tube. Insert the connection cable
3. Place the upper and lower parts together at the desired angle
4. Place the upper and lower parts together at the desired angle

TECHNICAL DIAGRAMS:

see page 293



Signal Tower Kombi*SIGN* 70

This is how you can assemble your Kombi*SIGN* 70 signal tower!

▸ STEP 1
Select the required optical or audible elements.

Many Kombi*SIGN* highlights are also available (for details see page 37).



Audible Signal Elements
- Buzzer Element
- Siren Element
- Vocal Element

Optical Signal Elements
- (LED) Permanent Light
- NEW LED Permanent Light ultrabright
- (LED) Flashing Light
- LED EVS Element
- LED Blinking Light
- LED Rotating Light

▸ STEP 2
Select the appropriate mounting option for your application.

▸ STEP 3
Select the correct terminal element for your mounting option.

Base Mounting



Terminal element for base mounting
Order no. **840 085 00**

Tube Mounting



Terminal element for tube mounting
Order no. **840 080 00**

▸ STEP 4
Where appropriate, select a base and the desired length (only for tube mounting).



Tube with clamp
Order no.
960 000 18



Adaptor for single hole mounting
Order no.
960 000 25



Base with integrated tube
Order no.
975 840 10

Tube Ø 25 mm, all anodized

	Order no.
100 mm long	**975 845 10**
250 mm long	**975 840 25**
400 mm long	**975 840 40**
600 mm long	**975 840 60**
800 mm long	**975 840 80**
1000 mm long	**975 840 03**



Base for Tube, plastic
Order no. **975 840 90**



Base for Tube, metal
Order no. **975 840 91**



Foldaway Base
Order no. **960 000 30**

Tube Ø 25 mm, plastic, only for Foldaway Base, 45 mm long
Order no. **960 000 31**



▸ STEP 5
Where appropriate, select the bracket and the contact box.



Contact box for cable exit at side
Order no. **975 840 01**



Bracket for base mounting
Order no. **960 000 02**



Bracket for 1-sided mounting
Order no. **975 840 85**



Bracket for 2-sided mounting
Order no. **975 840 86**



Contact box for cable exit at side
Order no. **975 840 01**



Contact box with magnetic base and cable exit at side
Order no. **975 840 04**



Bracket for base mounting with concealed cable entry
Order no. **960 000 14**



Bracket for tube mounting
Order no. **960 000 01**

TIP

The Signal Devices Site on the Internet:
www.werma.com

With our new **signal tower configurator** you can put together your own individual signal tower.

WERMA SIGNALTECHNIK

The Highlights for Kombi*SIGN* 70

NEW

WIN – Wireless Information Network



- Economical wireless-based Machine Data Collection system (MDC system)
- Central monitoring of a wide range of different machines via PC

See page 43

NEW

Kombi*SIGN* reflect



- Simple monitoring of signal towers out of view
- Signal tower "reflection" to a central location

See page 44

GSM Transmitter Element



- Malfunction signalled by signal tower is transmitted via SMS or call to a mobile phone
- Activation without the need for programming
- No additional power supply needed

See page 45

AS-Interface Element



- LEDs indicate current status
- 31 or 62 addresses
- Available with standard or A/B technology

See page 46

NEW

LED Permanent Light Element ultrabright



- Up to 20 times brighter than conventional LED elements
- Maximum brightness via intelligent LED control

See page 47

LED Flashing Light Element



- Extremely long life duration up to 50,000 hrs
- Low current consumption
- Shock-proof and vibration resistant

See page 38

LED EVS Element



- Attention-grabbing flickering light
- Extremely powerful signal effect
- Random sequence of light signals prevents acclimatisation effect

See page 48

Vocal Element



- Plays customer-specific audio files in mp3 format (sounds, alarms, music or spoken text)
- Easy programming via USB interface
- Up to 60 minutes replay capacity

See page 49

NEW

Siren Element with self-adjusting sound output



- Sound output is automatically adjusted to the background noise level
- Warning tone can be heard without being irritatingly loud

See page 50

Terminal Element with USB Interface



- Direct triggering of signal tower elements via USB Interface
- Easy activation

See page 51

Customer specific coloured coatings



- Signal towers in customer-specific colours – complete range of RAL colours available
- Meets the demands of an increasing design orientation

See page 52

Foldaway base



- Enables signal towers to be folded down completely, even when connected
- Vertical alignment of signal towers even on sloping surfaces

See page 53

840 Signal Tower Kombi*SIGN* 70



Base with tube (accessory)



Bracket (accessory)



Tube mounting (accessory)

- **Signal tower system 70 mm Ø with modular construction**
- **360° visibility**
- **Wide range of optical and audible elements**
- **Elements can be assembled as required**

TECHNICAL SPECIFICATIONS:

Dimensions (Ø x Height):	Terminal element: 70 mm x 30.5 mm Light element: 70 mm x 65.5 mm Audible element: 70 mm x 72/79/110 mm
Housing:	Terminal element: PA fibreglass, high-impact Cap: PC/ABS-Blend
Lens:	PC, transparent Audible and ASI elements: PC/ABS-Blend
Fixing:	Base mounting Tube mounting, for tube Ø 25 mm Bracket mounting (accessory)
Socket:	Bayonet, B15d, for bulb max. 7 W
Connection:	Screw terminal max. 2.5 mm² Contact protection according to VDE
Cable entry:	Cable diameter max. 14 mm
Element seal:	Pre-mounted with each module
Protection rating:	Light elements: IP 54 Audible elements: IP 54 (Order no. 844 123 55 = IP 40)
Number of modules possible:	Max. 5 / with 2-sided bracket max. 10 elements
Permanent light element	12 - 240 V≂ Bulb not included in assembly
LED Permanent light element Current consumption:	24 V≂ 115 V~ 230 V~ < 30 mA < 20 mA < 20 mA
NEW **LED Permanent light element ultrabright** Life duration: Current consumption: Up to 20 times brighter than conventional LED beacons.	24 V⎓ Up to 50,000 hrs Max. 190 mA
Flashing light element (Xenon) Life duration: Current consumption: Reduced for AS-Interface: Flash frequency:	24 V⎓ 115 V~ 230 V~ 4 x 10^6 flashes 125 mA 22 mA 15 mA 80 mA c. 1 Hz
LED Flashing light element Life duration: Current consumption: Flash frequency:	24 V⎓ 50,000 hrs < 30 mA (red/yellow) < 25 mA (green/clear/blue) c. 1 Hz (Double Flash)
LED EVS* element Current consumption: * EVS = Enhanced Visibility System	24 V⎓ 350 mA (red/yellow) 250 mA (green/clear/blue)
LED Blinking light element Current consumption: Blink frequency:	24 V≂ 115 V~ 230 V~ 25 mA 25 mA 25 mA c. 1 Hz
LED Rotating light element Current consumption: Rotation frequency:	24 V≂ 70 mA c. 120 r.p.m. Improved light effect

24 V

IP 54 | +50°C / -20°C | 2 Ws | 105 dB | PLC

WERMA SIGNALTECHNIK



(LED) Permanent/ Flashing light element

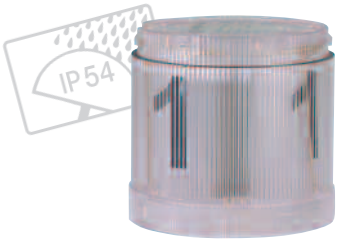

Permanent light, clear with info



LED EVS element



LED element

ORDER SPECIFICATIONS OPTICAL ELEMENTS:



Permanent light element	12-240 V≂
red	**840 100 00**
green	**840 200 00**
yellow	**840 300 00**
clear	**840 400 00**
blue	**840 500 00**

Bulb not included in assembly. Accessories see page 42.

LED Permanent light element	24 V≂	115 V~	230 V~
red	**843 100 55**	**843 100 67**	**843 100 68**
green	**843 200 55**	**843 200 67**	**843 200 68**
yellow	**843 300 55**	**843 300 67**	**843 300 68**
clear	**843 400 55**	**843 400 67**	**843 400 68**
blue	**843 500 55**	**843 500 67**	**843 500 68**

NEW

LED Permanent light element ultrabright	24 V⎓
red	**843 180 55**
green	**843 280 55**
yellow	**843 380 55**
clear	**843 480 55**
blue	**843 580 55**

Flashing light (Xenon)	24 V⎓ (ASI)	24 V⎓	115 V~	230 V~
red	**842 110 55**	**842 100 55**	**842 100 67**	**842 100 68**
green	**842 210 55**	**842 200 55**	**842 200 67**	**842 200 68**
yellow	**842 310 55**	**842 300 55**	**842 300 67**	**842 300 68**
clear	**842 410 55**	**842 400 55**	**842 400 67**	**842 400 68**
blue	**842 510 55**	**842 500 55**	**842 500 67**	**842 500 68**

Compare the prices and advantages of an LED Flashing light

LED Flashing light element	24 V⎓
red	**843 120 55**
green	**843 220 55**
yellow	**843 320 55**
clear	**843 420 55**
blue	**843 520 55**

LED EVS element	24 V⎓
red	**843 140 55**
green	**843 240 55**
yellow	**843 340 55**
clear	**843 440 55**
blue	**843 540 55**

LED Blinking light element	24 V≂	115 V~	230 V~
red	**843 110 55**	**843 110 67**	**843 110 68**
green	**843 210 55**	**843 210 67**	**843 210 68**
yellow	**843 310 55**	**843 310 67**	**843 310 68**
clear	**843 410 55**	**843 410 67**	**843 410 68**
blue	**843 510 55**	**843 510 67**	**843 510 68**

Life duration up to 50,000 hrs

LED Rotating light element	24 V≂
red	**843 130 55**
green	**843 230 55**
yellow	**843 330 55**
clear	**843 430 55**
blue	**843 530 55**

Improved light effect

Further voltages on request.

TECHNICAL DIAGRAMS:

see page 285 onwards

840 Signal Tower Kombi*SIGN* 70





Audible element
844 123 55



Terminal element with cap



Vocal element



GSM transmitter element

ORDER SPECIFICATIONS AUDIBLE ELEMENTS:

Buzzer element 85 dB, 25 mA, IP 54, Continuous or pulse tone	24 V≂ **844 118 55**	115 V~ **844 118 67**	230 V~ **844 118 68**
Siren element 105 dB, 150 mA, IP 40 Continuous tone alternating	24 V⎓ **844 123 55** no UL / CSA approval		
Multi-functional Siren 100 dB, IP 54, 8 different tones, adjustable sound output	24 V≂ /80 mA **844 126 55**	115 V~/40 mA **844 126 67**	230 V~/40 mA **844 126 68**
Multi-functional Siren, **can be triggered externally** 100 dB, 80 mA, IP 65, 7 diff. tones can be triggered externally, adjustable sound output, number of tones depending on the number of optical elements.	24 V⎓ **844 126 95**		
NEW **Siren element with** **self-adjusting sound output** Technical specifications see page 51. Available: 1st Quarter 2011.	24 V⎓ **844 810 55**		

ORDER SPECIFICATIONS TERMINAL ELEMENTS :

Terminal element for tube mounting incl. cap	**840 080 00**
Terminal element for bracket or base mounting incl. cap und rubber seal	**840 085 00**
Terminal element with **USB Interface** (for tube mounting) Technical specifications see page 51.	**840 580 00**

ORDER SPECIFICATIONS KOMBI*SIGN*-HIGHLIGHTS:

NEW **WIN system for Kombi*SIGN* 70** Technical specifications see page 43.	**860 840 01**
NEW **WIN slave for Kombi*SIGN* 70** Technical specifications see page 43.	**860 840 02**
NEW **Kombi*SIGN* 70 reflect** Technical specifications see page 44.	**861 840 01**
GSM Transmitter Element **for Kombi*SIGN* 70** Technical specifications see page 45.	24 V ⎓ **840 700 55**
Vocal Element **for Kombi*SIGN* 70** Technical specifications see page 49.	24 V⎓ **844 840 55**
AS-Interface Element **for Kombi*SIGN* 70** Technical specifications see page 46.	Standard Slave 24 V ⎓ **840 830 55**
	A/B-Slave 24 V ⎓ **840 810 55**

WERMA SIGNALTECHNIK

Accessories for Signal Tower Kombi*SIGN* 70



ORDER SPECIFICATIONS ACCESSORIES:

Contact box for cable exit at side, with mounting material	**975 840 01**
Contact box with magnetic base and cable exit at side	**975 840 04**
Bracket for tube mounting with cable gland	**960 000 01**
Bracket for surface mounting with cable gland	**960 000 02**
Bracket for base mounting with concealed cable entry, incl. rubber seals	**960 000 14**
Bracket for 1-sided mounting, incl. rubber seals	**975 840 85**
Bracket for 2-sided mounting, incl. rubber seals	**975 840 86**
Tube with clamp, Ø 25 mm 250 mm long, with cable gland	**960 000 18**
Tube Ø 25 mm, all anodized aluminium	
100 mm long	**975 845 10**
250 mm long	**975 840 25**
400 mm long	**975 840 40**
600 mm long	**975 840 60**
800 mm long	**975 840 80**
1000 mm long	**975 840 03**
Foldaway Base incl. rubber seals, suitable for tube, Ø 25 mm, all anodized aluminium (Technical specifications see page 53)	**960 000 30**
Tube Ø 25 mm, plastic for mounting the Terminal Element directly on the Foldaway Base	**960 000 31**
Base for tube mounting Ø 25 mm, plastic, incl. rubber seal	**975 840 90**
Base for tube mounting Ø 25 mm, metal, incl. rubber seal, recommended for tube lengths of 400 mm and longer	**975 840 91**
Base with integrated tube, Ø 25 mm, 110 mm long, plastic, incl. rubber seal	**975 840 10**
Adaptor for tube mounting, Ø 25 mm / 1/2″ NPT thread	**975 840 02**
Adaptor for single hole mounting Ø 25 mm, M 18	**960 000 25**
Cable gland for surface mounting M 16 x 1.5 mm	**960 000 04**

TECHNICAL DIAGRAMS:

see page 292 onwards

Accessories for Signal Tower Kombi*SIGN* 70

IP54

ORDER SPECIFICATIONS ACCESSORIES:



Bulb BA15d, total length max. 42 mm
(for permanent light 641)

12 V, 5 Watt	**955 840 34**
24 V, 5 Watt	**955 840 35**
30 V, 5 Watt	**955 840 32**
115 V, 5 Watt	**955 840 57**
230 V, 5 Watt	**955 840 38**



LED bulb BA15d, total length max. 42 mm
(for permanent light 840)

Voltage	24 V≂	115 V~	230 V~
Current consumption	< 45 mA	< 15 mA	< 15 mA
red	**956 100 75**	**956 100 67**	**956 100 68**
green	**956 200 75**	**956 200 67**	**956 200 68**
yellow	**956 300 75**	**956 300 67**	**956 300 68**
white	**956 400 75**	**956 400 67**	**956 400 68**
blue	**956 500 75**	**956 500 67**	**956 500 68**



Indication Board

- Indication Board for one to five modules
- Simple mounting onto signal tower tube
- Ample space for written information
- Simply break off unwanted segments

Dimensions of indication board (W x H):	153 x 345 mm
Surface area per section (W x H):	c. 140 x 50 mm
Material:	PMMA
Assembly:	Indication board (5 sections) incl. mounting material
Mounting:	Fixing only possible on 25 mm diameter tube
Indication board	**960 000 05**

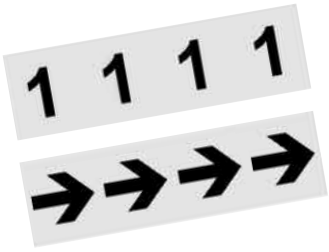

Info transparencies: To place inside optical elements, not for use in Flashing Light, LED EVS, LED Flashing Light and LED Permanent Light Element ultrabright.

neutral	**975 840 49**	number „6"	**975 840 56**
number „0"	**975 840 50**	number „7"	**975 840 57**
number „1"	**975 840 51**	number „8"	**975 840 58**
number „2"	**975 840 52**	number „9"	**975 840 59**
number „3"	**975 840 53**	number „10"	**975 840 92**
number „4"	**975 840 54**	arrow	**975 840 62**
number „5"	**975 840 55**		



ADDITIONAL INFORMATION:

You will find an overview of the entire range of accessories for Kombi*SIGN* Signal Towers on pages 60 and 61.

TECHNICAL DIAGRAMS:

see page 290 + 291

WERMA SIGNALTECHNIK

WIN* for Kombi*SIGN* 70

NEW



"WIN system" is immediately ready for use: Fit the slaves in the existing signal towers and connect the master to the PC



With the supplied software, users can wirelessly monitor their machinery via PC

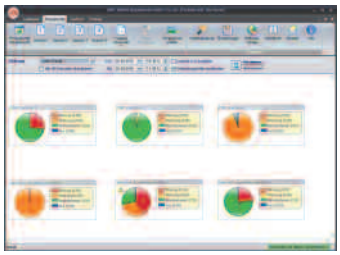

The software enables users to analyse productivity and increase the efficiency of their machines



The software displays the status of the signal towers integrated into the wireless network

- Economical wireless-based Machine Data Collection system (MDC system)
- Central monitoring of a wide range of different machines via PC
- Relevant machine information at a glance
- Reduction of reaction times, repair and maintenance requirements and costs
- No additional wiring as existing WERMA signal towers can be used
- Downtime analysis

Patent pending

TECHNICAL SPECIFICATIONS:

WIN slave	
Dimensions (Ø x Height):	70 mm x 65.5 mm
Housing:	PC, black
Connection:	Bayonet
Operating voltage:	24 V ≂
Current consumption:	40 mA
WIN master	
Dimensions (L x H x W):	76 mm x 30 mm x 80 mm (without antenna)
Housing:	ABS, black
Connection:	Via USB
Operating voltage:	Via USB
Current consumption:	< 100 mA
Suitable for:	Windows 2000, Windows XP, Windows Vista, Windows 7
Wireless connection	
ISM frequency:	868 MHz (WIN conforms to the EU's EN 300220 harmonised standard and can thus be used in all EU member countries. Further countries upon request.)
Transmission range:	Up to 300 m (unobstructed line of sight) Every slave simultaneously functions as a "repeater", enabling the transmission range to be significantly increased.

ORDER SPECIFICATIONS:

WIN system for Kombi*SIGN* 70 **860 840 01**
Assembly: WIN master, 3 WIN slaves Kombi*SIGN* 70 (pre-configured), Software

WIN slave for Kombi*SIGN* 70 **860 840 02**
To expand WIN system.
The network can be expanded to up to 50 WIN slaves.

ADDITIONAL INFORMATION:

*** WIN** = Wireless Information Network
Further informationen can be found in the chapter „Tech-Talk" beginning on page 320.

TECHNICAL DIAGRAMS:

see page 288

CE IP54 +50°C -20°C PLC

861 KombiSIGN reflect for KombiSIGN 70

NEW



The slave sends the status directly to the master, and reflects the status of the signal tower installed on the machine



Remote transmission via wireless signal with a maximum range of up to 300 m (unobstructed line of sight)



Simply fit the KombiSIGN reflect slave to the signal tower on the machine

- Simple monitoring of signal towers out of view
- Signal tower "reflection" to a central location
- Shortening of reaction times and reduction of costs
- KombiSIGN reflect is integrated into existing WERMA signal towers
- No additional wiring costs
- Simple commissioning due to pre-configured modules

TECHNICAL SPECIFICATIONS:

Slave	
Dimensions (Ø x Height):	70 mm x 65.5 mm
Housing:	PC, black
Connection:	Bayonet
Operating voltage:	24 V ≂
Current consumption:	40 mA
Master	
Dimensions (Ø x Height):	70 mm x 65.5 mm (without antenna)
Housing:	PC, black
Connection:	Bayonet
Operating voltage:	24 V ⎓
Current consumption:	40-90 mA
Wireless connection	
ISM frequency:	868 MHz (KombiSIGN reflect conforms to the EU's EN 300220 harmonised standard and can thus be used in all EU member countries. Further countries upon request.)
Transmission range:	Up to 300 m (unobstructed line of sight)

ORDER SPECIFICATIONS:

KombiSIGN 70 reflect	**861 840 01**

ADDITIONAL INFORMATION:

Signal tower "reflection"
WERMA Signaltechnik provides a simple solution for the remote wireless monitoring of machinery. The new "KombiSIGN reflect" kit can be integrated into existing signal towers which are already installed on your machines. KombiSIGN reflect "reflects" the status of the machine to a signal tower within your line of sight.

This enables you to wirelessly monitor machines situated at a greater distance and respond quickly to malfunctions. With KombiSIGN reflect, even machines which where not previously network-capable can now be remotely monitored.

Further informationen can be found in the chapter "Tech-Talk" on page 324.

TECHNICAL DIAGRAMS:

see page 289

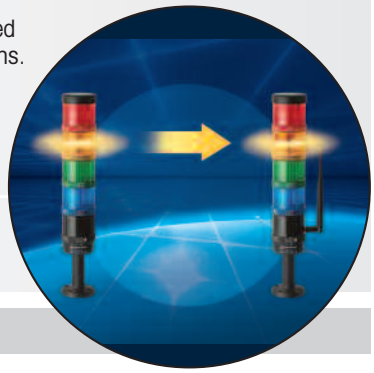

Simple monitoring of signal towers out of view

CE IP65 +50°C -20°C PLC

WERMA SIGNALTECHNIK

840 GSM Transmitter Element for Kombi*SIGN* 70

Patent approved



- **Unique Signal Tower solution**
- **GSM transmitter element can be simply integrated into an existing signal tower**
- **Activation without the need for programming**
- **Malfunction signalled by signal tower is transmitted via SMS to a mobile phone**
- **No additional power supply needed**
- **Also suitable for US frequencies (Quadband)**



Also suitable for US frequencies

TECHNICAL SPECIFICATIONS:

Dimensions (Ø x Height):	70 mm x 65.5 mm (without antenna)
Housing:	PC
Current consumption:	50 mA
Max. current draw (momentary):	450 mA
GSM frequency:	850, 900, 1800/1900 MHz
Plug-in slot for SIM card:	Integrated (SIM card is not included in assembly)
Antenna connection:	FME plug connector (bracket antenna included)

ORDER SPECIFICATIONS:

GSM Transmitter Element	24 V ⎓
	840 700 55

TECHNICAL DIAGRAMS:

see page 285

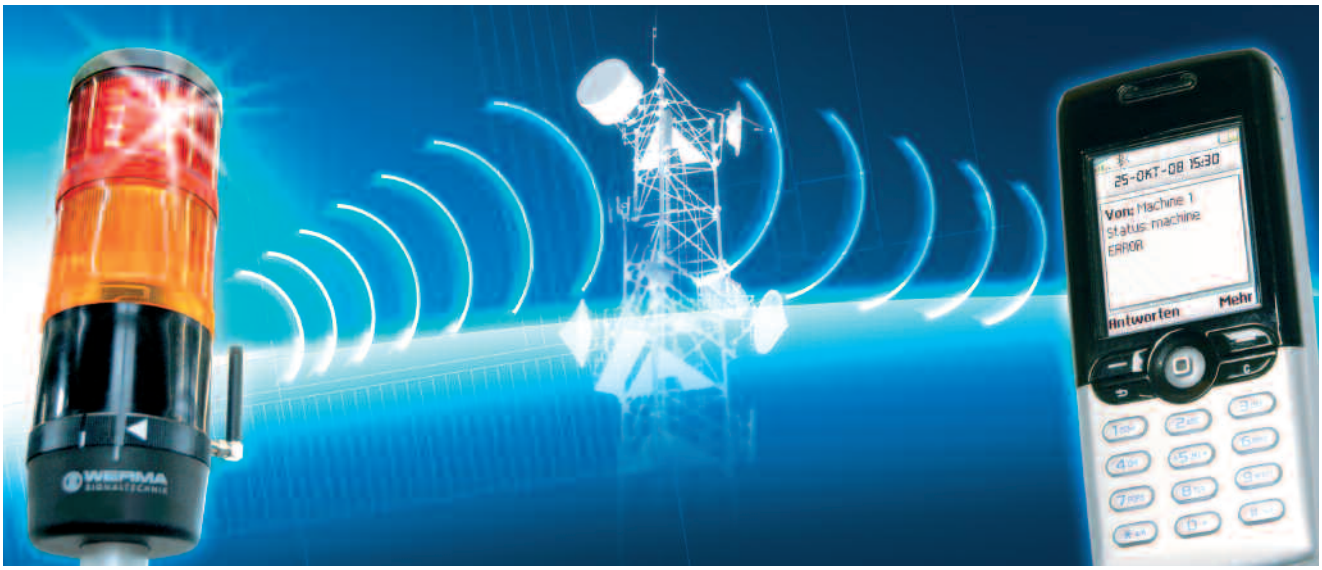

Class 2

c UL us CE PCT 170 g IP54 +50°C -20°C

840 AS-Interface Element for Kombi*SIGN* 70



Cable not included in assembly



LEDs displays the current status

- LEDs indicate current status
- 31 or 62 addresses
- Available with standard or A/B technology
- Voltage supply switchable from internal bus supply to additional external voltage supply
- With addressing socket

TECHNICAL SPECIFICATIONS:

	Standard Slave	A/B-Slave
Number of addresses:	Max. 31	Max. 62
Number of signal elements:	Max. 4	Max. 3
IO-Code:	8	8
ID-Code:	F	A
ID2-Code:	–	E
Outputs:	4 semiconductor relays	3 semiconductor relays
Approved in accordance with:	Spec. V 3.0	Spec. V 3.0

Specif. Power supply	
AS-Interface Element:	Via bus conduction
Operating voltage:	25 V … 31.6 V according to the AS-Interface specification
Reverse battery protection:	Integrated
Watchdog:	Integrated
Additional external voltage:	24 V +/- 10% ⎓

	With internal add. voltage	With external add. voltage
Current carrying cap. Σ Imax:	200 mA	200 mA per signal element
Current consumption max:	250 mA	75 mA
Voltage at signal element:	18 V - 24 V	24 V +/- 10%
Short circuit/overload protection:	Integrated	Pre-fuse M 1.6 A

ORDER SPECIFICATIONS:

AS-Interface Element	Standard Slave	A/B-Slave
	840 830 55	**840 810 55**

ADDITIONAL INFORMATION:

The Kombi*SIGN* Signal Towers 70 and 71 with AS-Interface Element are capable of total communication: Through simple integration of an AS-Interface Element the actuators are connected to the networking system Actuator-Sensor-Interface – this considerably reduces complex wiring. The necessary power supply (supply via bus or external) can be selected with a switch. This element is mounted as the first tier of the individual signal tower directly on top of the terminal element. (Further Information see page 319).

TECHNICAL DIAGRAMS:

see page 285

Class 2

Standard Slave: Approval No. 66301

A/B-Slave: Approval No. 66202

77 g

IP54

+50°C

-20°C

WERMA SIGNALTECHNIK

843 LED Permanent Light Element ultrabright for Kombi*SIGN* 70



- **Up to 20 times brighter than conventional LED elements**
- **Extremely good visibility – even in direct sunlight**
- **Life duration up to 50,000 hrs**
- **Maximum brightness via intelligent LED control**
- **Low current consumption and maintenance-free**
- **Shock-proof and vibration-resistant**

Life duration up to 50,000 hrs

TECHNICAL SPECIFICATIONS:

Dimensions (Ø x Height):	70 mm x 65.5 mm
Lens:	PC, transparent
Seal:	Pre-mounted with each element
Number of modules possible:	5, with 2-sided bracket max. 10
Current consumption:	Max. 190 mA



Maximum brightness via intelligent LED control

ORDER SPECIFICATIONS:

LED Permanent light element ultrabright	24 V ⎓
red	**843 180 55**
green	**843 280 55**
yellow	**843 380 55**
clear	**843 480 55**
blue	**843 580 55**

ADDITIONAL INFORMATION:

Sophisticated triggering

Thanks to its sophisticated triggering, the innovative LED element "ultrabright" is up to 20 times brighter than conventional LED elements – making it almost certainly the brightest permanent light that the world of signalling technology currently has to offer.

Furthermore, the intelligent electronics ensure that the LEDs operate at maximum brightness, depending on the ambient and operating temperatures. The "ultrabright" LED element is therefore always working at its optimum, and the energy-saving LED technology ensures that power consumption is kept to a minimum.

Further informationen can be found in the chapter "Tech-Talk" beginning on page 325.



The high level of brightness guarantees good visibility – even in direct sunlight

TECHNICAL DIAGRAMS:

see page 285

CE IP65 +50°C -20°C PLC

843 LED EVS* Element for Kombi*SIGN* 70



- **Attention-grabbing flickering light**
- **Developed on a neurobiological basis**
- **Extremely powerful signal effect**
- **Random sequence of light signals prevents acclimatisation effect**
- **For signalling extremely hazardous situations and the need for immediate action**

TECHNICAL SPECIFICATIONS:

Life duration up to 50,000 hrs

Dimensions (Ø x Height):	70 mm x 65.5 mm
Lens:	PC, transparent
Seal:	Pre-mounted with each element
Number of modules possible:	5, with 2-sided bracket max. 10
Current consumption:	red / yellow: 200 mA green / blue / clear: 150 mA



Integrated into the Kombi*SIGN* Signal Towers, the new EVS LED Element generates a highly attention-grabbing signal

ORDER SPECIFICATIONS:

Voltage	24 V ⎓
red	**843 140 55**
green	**843 240 55**
yellow	**843 340 55**
clear	**843 440 55**
blue	**843 540 55**

ADDITIONAL INFORMATION:

*** EVS** = Enhanced Visibility System or Enhanced Visibility System
Further informationen can be found in the chapter "Tech-Talk" on page 326.

EVS – Attention-grabbing light effect on neurobiological basis
The flickering of neon lamps and comparable light effects are highly effective at attracting our attention. The neurobiological basis of this phenomenon is explained by a university scientist as follows: Light signals are processed in the human brain, not directly in the eye.

In order to be consciously registered there, incoming stimuli first have to pass through a form of filter. This filter has a "protective" function. During sleep it reduces disturbing stimuli to a minimum and assists in "overlooking" regular or continuous signals.

EVS – Flickering light without acclimatisation effect
On the basis of this understanding, WERMA's R+D department set out to find a flickering light with a high degree of effectivity in attracting attention. In a multistage laboratory experiment 20 test candidates were asked to judge a series of different light signals and to determine the most eye-catching light. The result of the study was a stochastic flickering light with optimal attention-grabbing characteristics: EVS – Enhanced Visibility System! The light effect of this system is completely new and distinguishes it from all previous systems.

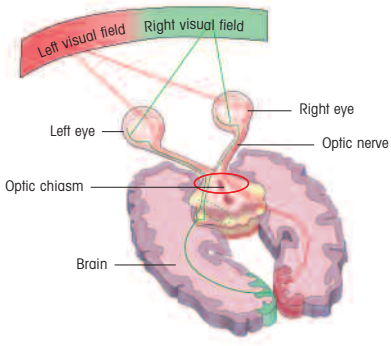

The way in which the brain processes visual stimuli formed the basis for the development of the new EVS technology

TECHNICAL DIAGRAMS:

see page 285

CE IP54 +50°C -20°C PLC

WERMA SIGNALTECHNIK

844 Vocal Element for Kombi*SIGN* 70

German utility model approved





The vocal element can be combined with up to 3 signal elements



Individual messages can be recorded via the headset with microphone directly on to the PC (accessory, specific version may vary from photo)

- Plays customer-specific audio files in mp3 format (sounds, alarms, music or spoken text)
- Easy programming via USB interface
- Excellent sound quality
- Up to 60 minutes replay capacity
- Positive and negative logic possible
- Adjustable sound output

mp3 compatible

TECHNICAL SPECIFICATIONS:

Dimensions (Ø x Height):	70 mm x 111 mm
Housing:	PC
Current consumption:	400 mA
Integrated memory:	Approx. 60 min. of replay capacity
Number of sequences recordable:	15, depending on the number of signal elements
Number of additionally signal elements:	Max. 3
Programming:	Via USB connection cable from PC
Sound output:	Adjustable, max. 85 dB

Assembly includes USB connection cable.

ORDER SPECIFICATIONS:

Vocal element	24 V ⎓
	844 840 55

ACCESSORIES:

Headset with microphone	**960 645 01**

TECHNICAL DIAGRAMS:

see page 286



c UL us CE PC 150 g IP54 +50°C -20°C max 85 dB

844

Siren Element with self-adjusting sound output for Kombi*SIGN* 70



- **Automatic sound output adjustment between 80 and 100 dB**
- **Sound output is c. 5 dB louder than the background noise level**
- **Continual measurement of the ambient noise level**
- **Ideal for applications with changing ambient sound levels**

TECHNICAL SPECIFICATIONS:

Dimensions (Ø x Height):	70 mm x 111 mm
Housing:	PC
Tone type:	Pulse tone
Tone frequency:	2.5 KHz
Sound output:	80 dB - max. 100 dB

Loud enough yet not disturbing!



ORDER SPECIFICATIONS:

Voltage:	24 V ⎓
Current consumption:	< 150 mA
	844 810 55

ADDITIONAL INFORMATION:

The siren element adjusts its sound output through continual measurement of the ambient noise level. The emitted tone is c. 5 dB louder than the background noise level. The warning signal can always be heard without being irritatingly loud for people in the sounder's vicinity.

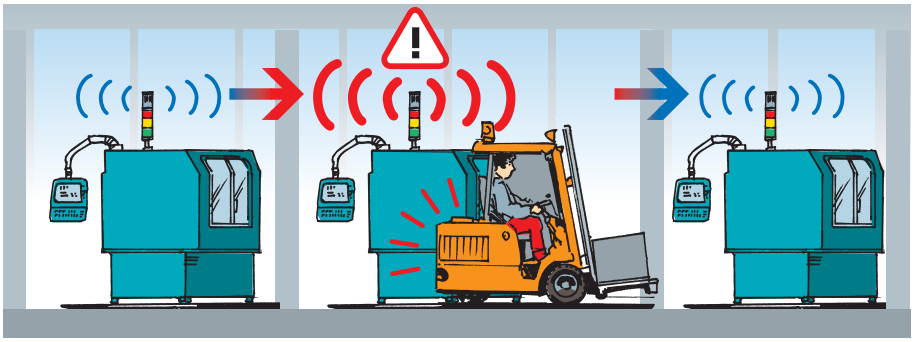

TECHNICAL DIAGRAMS:

see page 286

c UL us CE PG 125 g IP 54 +50°C -20°C max100 dB PLC

WERMA SIGNALTECHNIK

840 Terminal Element with USB Interface for Kombi*SIGN* 70



- **Automatic sound output adjustment between 80 and 100 dB**
- **Sound output is c. 5 dB louder than the background noise level**
- **Continual measurement of the ambient noise level**
- **Ideal for applications with changing ambient sound levels**



Direct triggering of the signal tower via USB Interface

TECHNICAL SPECIFICATIONS:

Dimensions (Ø x Height):	70 mm x 30.5 mm
Material:	PA-GF, shock resistant
Fixing:	Tube mounting
Connection:	USB-Bus Assembly includes installation software and USB connection cable (AWG 22), 2 m long Maximum permitted length of USB cable (min. AWG 22): 7 m
Current carrying capacity Imax:	100 mA

ORDER SPECIFICATIONS:

Terminal element USB	24 V ⎓ **840 580 00**

ACCESSORIES:

Base with integrierted tube	**975 840 10**
Tube mounting with base for tube (metal)	**975 840 91**

Tube Ø 25 mm

100 mm long	**975 845 10**	250 mm long	**975 840 25**
400 mm long	**975 840 40**	600 mm long	**975 840 60**
800 mm long	**975 840 80**	1000 mm long	**975 840 03**



Base for tube (metal) and tube Ø 25 mm (accessories)

ADDITIONAL INFORMATION:

Direct triggering via USB Interface
In many applications, it is necessary to indicate operating states or faults by means of an optical signal. A PLC or machine controller is not available in all areas; PCs are often also connected to control the machines. The optimal solution for this is the terminal element with USB interface for Kombi*SIGN* 70, 71 and Kompakt 71.

This innovation in the field of signal towers is controlled directly from the PC and can therefore be put into operation easily and in an uncomplicated manner. Neither a separate power supply nor additional hardware is required because the terminal element with USB interface is based on a standard USB interface.

TECHNICAL DIAGRAMS:

see page 285

840 KombiSIGN 70 in customer-specific coloured coatings



- Signal towers in customer-specific colours
- Meets the demands of an increasing design preference
- Simple ordering procedure
- Complete range of RAL colours available

TECHNICAL SPECIFICATIONS:

Dimensions Terminal Elements (Ø x Height):	70 mm x 26.5 mm
Housing Terminal Elements:	PA-GF, fibreglass, high-impact, Cap: PC
Connection:	CAGE CLAMP® technology max. 2.5 mm² Contact protection according to VDE
Cable entry:	Cable diameter max. 14 mm
Number of modules possible:	Max. 5
Minimum order quantity:	10 pieces
Delivery time:	By arrangement
Colour Finish:	Matt or gloss

Please state the required RAL number

ORDER SPECIFICATIONS TERMINAL ELEMENTS:

	Screw terminal
Terminal element for tube mounting, coated, including cap	**840 780 00**
Terminal element for Bracket- or base mounting, coated including cap and seal	**840 785 00**

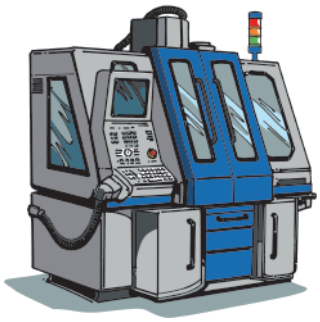

The Signal Towers are designed to harmonise with the colour of the customer's product design, guaranteeing a uniform appearance



The Kombi*SIGN* Signal Towers 70 can be coated in any colour within the RAL spectrum

ACCESSORIES:

Base with integrated tube, coated Ø 25 mm, 110 mm long, plastic, incl. rubber seals	**960 000 24**
Bracket for 1-sided mounting, coated, incl. rubber seals	**960 000 22**

ADDITIONAL INFORMATION:

Please state the required RAL number and colour finish (matt or gloss) with each of your orders. Slight colour deviations are possible.



TECHNICAL DIAGRAMS:

see page 285

WERMA SIGNALTECHNIK

960 Foldaway base for Kombi*SIGN* 70

German utility model approved



Maximum stability even with strong shocks and vibrations thanks to the locking mechanism



When transporting the machine, the signal tower can be folded away in a few simple steps



Vertical alignment of Signal Towers even on sloping surfaces

- The signal tower can be folded away while still connected
- Minimises packaging costs and optimises machine transportation
- Simple mounting and cable entry – for up to Ø 14 mm
- Vertical alignment of signal towers even on sloping surfaces
- Positioning in 7.5° steps, markings for 30, 45, 60 or 90 degrees

TECHNICAL SPECIFICATIONS:

Dimensions (Ø x Height):	70 mm x 117 mm
Material:	PA-GF
Cable diameter:	Max. 14 mm
Assembly:	Incl. rubber seals
Fixing:	Vertical, horizontal Positioning in 7.5° steps
Suitable for:	Tube, Ø 25 mm, all anodized aluminium, not included in assembly (accessory)

ORDER SPECIFICATIONS:

Foldaway base for Kombi*SIGN* 70	**960 000 30**

ACCESSORIES:

Tube Ø 25 mm, plastic 45 mm long, for direct mounting of the Terminal Element onto the Foldaway Base	**960 000 31**
Tube Ø 25 mm, all anodized aluminium, see page 41	
Cable gland M 16 x 1.5 mm	**960 000 04**

QUICK AND SIMPLE MOUNTING:

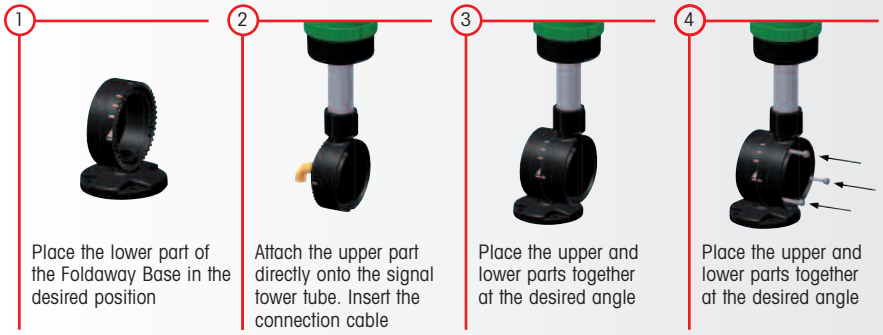

TECHNICAL DIAGRAMS:

see page 293

IP54 +50°C -20°C

Signal Tower Kombi*SIGN* 50

This is how you can assemble your Kombi*SIGN* 50 signal tower!

STEP 1
Select the required optical or audible elements.



Audible Signal Elements
- Buzzer Element



Optical Signal Elements
- Permanent Light
- LED Permanent Light
- LED Flashing Light
- LED Blinking Light

NEW

STEP 2
Select the terminal element.



Terminal element for surface, tube, single hole and bracket mounting

Order no.
845 000 00

STEP 3
Select the appropriate mounting option for your application.

STEP 4
Select the appropriate accessory for your mounting option.

Base/Bracket Mounting



Bracket for wall mounting

Order no.
975 845 02



Base for surface mounting, incl. rubber seal

Order no.
975 845 01

Tube Mounting

Tube Ø 25 mm, Aluminium

	Order no.
100 mm long	**975 845 10**
250 mm long	**975 840 25**
400 mm long	**975 840 40**
600 mm long	**975 840 60**
800 mm long	**975 840 80**
1000 mm long	**975 840 03**



Base for tube, plastic
Order no. **975 840 90**



Base for tube, metal
Order no. **975 840 91**

Foldaway base
Order no. **960 000 30**



Single hole Mounting



Adaptor for single hole mounting

Order no.
975 845 03

STEP 5
Where appropriate, select the bracket and the contact box.



Contact box for cable exit at side

Order no.
975 840 01



Contact box with magnetic base and cable exit at side
Order no.
975 840 04



Bracket for base mounting with concealed cable entry

Order no.
960 000 14



Bracket for base mounting

Order no.
960 000 01

TIP

The Signal Devices Site on the Internet:
www.werma.com

With our new **signal tower configurator** you can put together your own individual signal tower.

WERMA SIGNALTECHNIK

Signal Tower Kombi*SIGN* 50



Base with tube (accessory)



Bracket (accessory)



Base mounting (accessory)

- **Signal tower system 50 mm Ø with modular construction**
- **360° visibility**
- **Choice of optical and audible elements**
- **Order of optical elements interchangeable as required**
- **Tool-free change of elements and bulbs**

TECHNICAL SPECIFICATIONS:

Dimensions (Ø x Height):	Terminal element: 52 mm x 16 mm		
	Light element: 52 mm x 67 mm		
	Audible element: 52 mm x 72 mm		
Housing:	Terminal element: PA fibreglass, high-impact		
	Cap: PC		
Lens:	PC, transparent		
	Audible and ASI: PC/ABS-Blend		
Fixing:	Base mounting (accessory)		
	Tube mounting, for tube Ø 25 mm		
	Single hole mounting (accessory)		
	Bracket mounting (accessory)		
Socket:	Bayonet, B15d, for bulb max. 5 W		
Connection:	Screw terminal max. 1.5 mm²		
	Contact protection according to VDE		
Cable entry:	Cable diameter max. 10.5 mm		
Protection rating:	Light elements: IP 54		
	Audible elements: IP 54		
Number of modules possible:	Max. 4		
Permanent light element	12 - 240 V≂		
	Bulb not included in assembly		
LED Permanent light element	24 V≂	115 V~	230 V~
Current consumption:	45 mA	25 mA	25 mA
NEW **LED Flashing light element**			
Life duration:	Up to 50,000 hrs		
Current consumption:	Red	Yellow, green, clear, blue	
	45 mA	40 mA	
LED Blinking light element	24 V≂	115 V~	230 V~
Current consumption:	25 mA	25 mA	25 mA
Blink frequency:	c. 1 Hz	c. 1 Hz	c. 1 Hz

ACCESSORIES:

see page 57

TECHNICAL DIAGRAMS:

see page 286

24 V

IP 54 | +50°C / -20°C | 80 dB | PLC

845 Signal Tower Kombi*SIGN* 50



Permanent light element



Life duration up to 50,000 hrs

LED element



Buzzer element



Terminal element with cap

ORDER SPECIFICATIONS OPTICAL ELEMENTS:

Permanent light element	12-240 V		
red	**846 100 00**		
green	**846 200 00**		
yellow	**846 300 00**		
clear	**846 400 00**		
blue	**846 500 00**		
LED Permanent light element	24 V≂	115 V~	230 V~
red	**848 100 55**	**848 100 67**	**848 100 68**
green	**848 200 55**	**848 200 67**	**848 200 68**
yellow	**848 300 55**	**848 300 67**	**848 300 68**
clear	**848 400 55**	**848 400 67**	**848 400 68**
blue	**848 500 55**	**848 500 67**	**848 500 68**
NEW **LED Flashing light element**	24 V⎓		
red	**848 120 55**		
green	**848 220 55**		
yellow	**848 320 55**		
clear	**848 420 55**		
blue	**848 520 55**		
LED Blinking light element	24 V≂	115 V~	230 V~
red	**848 110 75**	**848 110 67**	**848 110 68**
green	**848 210 75**	**848 210 67**	**848 210 68**
yellow	**848 310 75**	**848 310 67**	**848 310 68**
clear	**848 410 75**	**848 410 67**	**848 410 68**
blue	**848 510 75**	**848 510 67**	**848 510 68**

Life duration up to 50,000 hrs

ORDER SPECIFICATIONS AUDIBLE ELEMENT:

Buzzer element	24 V≂	115 V≂	230 V~
80 dB, max. 25 mA, IP 54, Continuous or pulse tone, adjustable	**849 000 75**	**849 000 77**	**849 000 68**

ORDER SPECIFICATIONS TERMINAL ELEMENT:

Terminal element	**845 000 00**
for base mounting, tube mounting, single hole and bracket mounting, including cap	

TECHNICAL DIAGRAMS:

see page 286

WERMA SIGNALTECHNIK

845 Accessories for Signal Tower Kombi*SIGN* 50























ORDER SPECIFICATIONS ACCESSORIES:

Contact box for cable exit at side, with mounting material	**975 840 01**
Contact box with magnetic base and cable exit at side	**975 840 04**
Bracket for tube mounting incl. cable gland	**960 000 01**
Bracket for base mounting with concealed cable entry, incl. rubber seals	**960 000 14**
Bracket for wall mounting	**975 845 02**
Tube Ø 25 mm, all anodized aluminium	
100 mm long	**975 845 10**
250 mm long	**975 840 25**
400 mm long	**975 840 40**
600 mm long	**975 840 60**
800 mm long	**975 840 80**
1000 mm long	**975 840 03**
Foldaway Base incl. rubber seals, suitable for tube, Ø 25 mm, all anodized aluminium (Technical specifications see page 35)	**960 000 30**
Base for tube mounting Ø 25 mm, plastic, incl. rubber seal	**975 840 90**
Base for tube mounting Ø 25 mm, metal, incl. rubber seal	**975 840 91**
Base for surface mounting, incl. rubber seal	**975 845 01**
Adaptor for single hole mounting M 18	**975 845 03**

TECHNICAL DIAGRAMS:

see page 292 onwards

845 Accessories for Signal Tower Kombi*SIGN* 50



ORDER SPECIFICATIONS ACCESSORIES:

Indication board

- Indication Board for one to five modules
- Simple mounting onto signal tower tube
- Ample space for written information
- Simply break off unwanted segments

Dimensions of indication board (W x H):	153 x 345 mm
Surface area per section (W x H):	c. 140 x 50 mm
Material:	PMMA
Assembly:	Indication board (5 sections) incl. mounting material
Mounting:	Fixing only possible on 25 mm diameter tube
Indication board	**960 000 05**



LED bulb BA15d, total length max. 42 mm
(for permanent light 846)

Voltage Current consumption	24 V≂ < 45 mA	115 V~ < 15 mA	230 V~ < 15 mA
red	**956 100 75**	**956 100 67**	**956 100 68**
green	**956 200 75**	**956 200 67**	**956 200 68**
yellow	**956 300 75**	**956 300 67**	**956 300 68**
white	**956 400 75**	**956 400 67**	**956 400 68**
blue	**956 500 75**	**956 500 67**	**956 500 68**



Bulb BA15d, total length max. 42 mm
(for permanent light 846)

12 V, 5 Watt	**955 840 34**
24 V, 5 Watt	**955 840 35**
30 V, 5 Watt	**955 840 32**
115 V, 5 Watt	**955 840 57**
230 V, 5 Watt	**955 840 38**

ADDITIONAL INFORMATION:

You will find an overview of the entire range of accessories for Kombi*SIGN* Signal Towers on pages 60 and 61.

TECHNICAL DIAGRAMS:

see page 292 onwards

WERMA SIGNALTECHNIK

845 AS-Interface Element for Kombi*SIGN* 50



Cable not included in assembly

TECHNICAL SPECIFICATIONS:

	AS-Interface Element with additional external voltage
Number of signal elements:	Max. 4
IO-Code:	8
ID-Code:	F
Power supply:	Via bus conduction
Operating voltage:	25 V ... 31.6 V
Current consumption Imax:	50 mA
Polarity reversal protection:	Integrated
Watchdog:	Integrated
Outputs:	4, relays
On-load voltage:	Additional external voltage: 10 V...30 V ⎓ 10 V...230 V ~
Current carrying cap. Σ Imax:	1.5 A
Short circuit/overload pro.:	Fuse M 1.6 A

ADDITIONAL INFORMATION:

The Kombi*SIGN* 50 Signal Tower with AS-Interface Element is capable of total communication: Through simple integration of an AS-Interface Element the actuators are connected to the networking system Actuator-Sensor-Interface – this considerably reduces complex wiring. This element is mounted as the first tier of the individual signal tower directly on top of the terminal element. (Further Information see page 319).

ORDER SPECIFICATIONS:

AS-Interface-Element with add. external voltage	**845 800 68**

TECHNICAL DIAGRAMS:

see page 286

Accessories Kombi*SIGN* 50, 70 and 71

Kombi*SIGN* 50

Base for surface mounting,
incl. rubber seal
Order no. 975 845 01

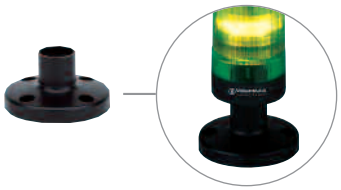

Bracket for wall mounting
Order no. 975 845 02

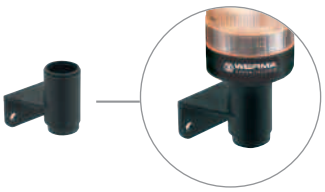

Adaptor for single hole mounting
Order no. 975 845 03

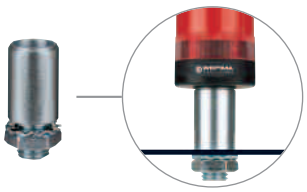

TECHNICAL DIAGRAMS:
see page 292 onwards

Kombi*SIGN* 70 and 71

Bracket for 1-sided mounting,
incl. rubber seals
Order no. 975 840 85

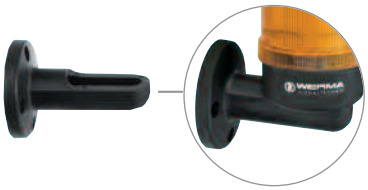

Base with integrated tube,
Ø 25 mm, 110 mm long,
plastic, incl. rubber seal
Order no. 975 840 10



Bracket for surface mounting
incl. cable gland
M 16 x 1.5
Order no. 960 000 02

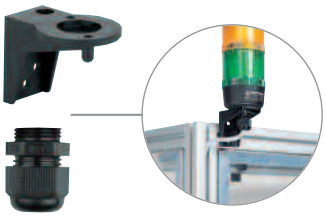

Info transparencies:
neutral, arrow, numbers "0" – "10"
Order no. see page 22 + 42

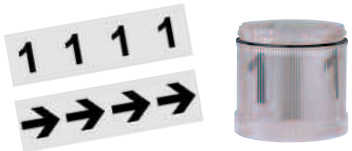

Bracket for 2-sided mounting,
incl. rubber seals
Order no. 975 840 86

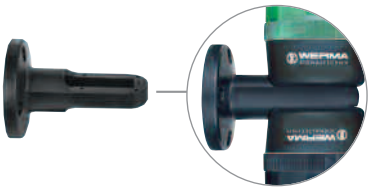

Adaptor for tube mounting
Ø 25 mm / 1/2" NPT thread
Order no. 975 840 02

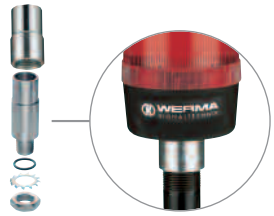

Adaptor for single hole mounting
Ø 25 mm, M 18
Order no. 960 000 25

Cable gland for surface
mounting, M 16 x 1.5
Order no. 960 000 04

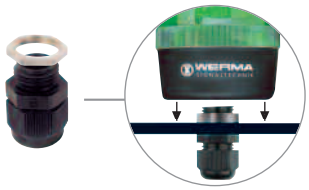

Tube with clamp, Ø 25 mm,
250 mm long, incl. cable gland
Order no. 960 000 18

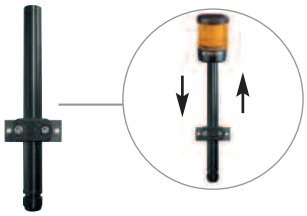

WERMA SIGNALTECHNIK

Kombi*SIGN* 50, 70 and 71

Contact box for cable exit
at side, with mounting material
and seal, cable gland M 16 x 1.5
Order no. 975 840 01



Contact box with magnetic
base and cable exit at side
cable gland M 16 x 1.5
Order no. 975 840 04

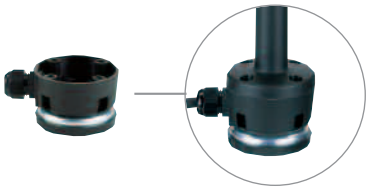

Bracket for tube mounting,
incl. cable gland M 16 x 1.5
Order no. 960 000 01

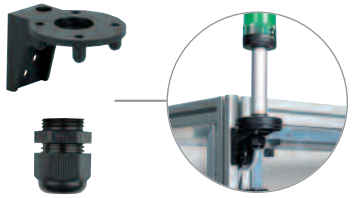

Base for tube mounting, Ø 25 mm,
plastic, incl. rubber seal
Order no. 975 840 90

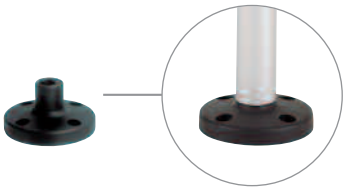

Base for tube Ø 25 mm, metal,
incl. rubber seal, recommended for tube
lengths of 400 mm and longer
Order no. 975 840 91

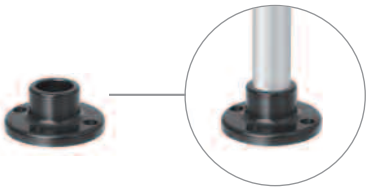

Bracket for base mounting,
with concealed cable entry,
incl. rubber seals
Order no. 960 000 14



Foldaway Base –
Signal Tower can be folded away
Order no. 960 000 30



Tube Ø 25 mm, plastic,
45 mm long, for direct mounting of the
Terminal Element onto the Foldaway Base
(only for Kombi*SIGN* 70 + 71)
Order no. 960 000 31

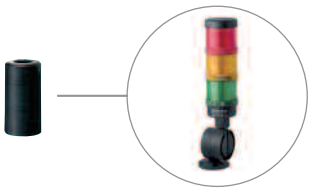

Tube Ø 25 mm, all anodized aluminium

100 mm long	**975 845 10**
250 mm long	**975 840 25**
400 mm long	**975 840 40**
600 mm long	**975 840 60**
800 mm long	**975 840 80**
1000 mm long	**975 840 03**

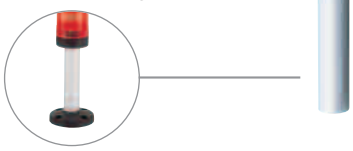

Indication board
(for tube mounting)
Order no. 960 000 05

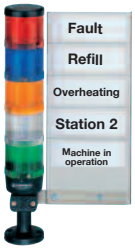

LED bulb BA15d
total length max. 42 mm
Colours: red, yellow, green, clear, blue
Voltage 24 V, 115 V, 230 V
Order specifications see page 166



Bulb BA15d,
total length max. 42 mm

12 V, 5 Watt	**955 840 34**
24 V, 5 Watt	**955 840 35**
30 V, 5 Watt	**955 840 32**
115 V, 5 Watt	**955 840 57**
230 V, 5 Watt	**955 840 38**



KOMPAKT

The complete Signal Tower Solution – available in 2 sizes

KOMPAKT 36



- Ø 36 mm
- Specially intended for small pieces of equipment and machinery
- Also available in aesthetic silver finish
- Available with M12 plug
- Also available in an Ex version (see page 251)

Page 63

KOMPAKT 71



- Ø 70 mm
- Covers the wide range of applications in the industrial sector
- Also available with USB Interface

Page 64

The advantages at a glance





- Completely pre-assembled LED Signal Tower
- Cost-effective LED solution
- Simplified ordering – the complete tower can be ordered with just one number
- Life duration of up to 50,000 hours
- Available in the most common signal combinations
- High protection rating IP 65

Kompakt 36 - also available in aesthetic silver finish

The LED Signal Tower KOMPAKT 36 is also available with aesthetic silver coating. These signal towers are a fusion of modern metal design with high functionality and efficiency

The clear lenses ensure an unequivocal signal even in bright light conditions thus ruling out errors even in bad light conditions.

The aesthetically pleasing and innovative plastic housing with metallic coating also makes the signal towers an excellent choice in areas where the optical effect is of importance.

Order Specifications see page 63.



LED Signal Tower KOMPAKT 36

- Completely pre-assembled
- LED Permanent light
- 36 mm diameter
- Available with user-friendly plug connection
- Also available in aesthetic silver finish



KOMPAKT 36
(plug connection)



KOMPAKT 36 in silver finish, base with integrated tube (accessory)



Bracket (accessory)

TECHNICAL SPECIFICATIONS:

Life duration up to 50,000 hrs

Dimensions (Ø x Height):	2 tier: 38 x 112 mm 3 tier: 38 x 146 mm
Housing:	Housing parts PC
Fixing:	Surface mounting, tube mounting, bracket mounting
Connection:	Cable connection: Cable, 2 m long, with adaptor M 25 / M 12 for fixing incl. rubber seal Plug Connection: M 12 plug with adaptor M 25 / M 20 for fixing incl. rubber seal
Current consumption:	40 mA per tier

ORDER SPECIFICATIONS:

KOMPAKT 36

		Connection	Order no.
2 tier	red/green	Cable	**693 010 55**
	red/yellow	Cable	**693 020 55**
	red/green	Plug	**693 510 55**
	red/yellow	Plug	**693 520 55**
3 tier	red/yellow/green	Cable	**693 000 55**
	red/yellow/green	Plug	**693 500 55**

KOMPAKT 36 in silver finish

		Connection	Order no.
2 tier	red/green	Cable	**693 080 55**
	red/green	Plug	**693 580 55**
3 tier	red/yellow/green	Cable	**693 070 55**
	red/yellow/green	Plug	**693 570 55**

KOMPAKT 36 available on request with negative logic.

ACCESSORIES:

Fixing bracket	**960 693 01**
To maintain IP 65 the cable gland 960 000 32 must be fitted to the cable version.	
Cable gland M 12 x 1.5 mm	**960 000 32**
Base with integrated tube, black, M 25 x 1.5 mm incl. rubber seals	**960 693 03**
Base with integrated tube, silver, M 25 x 1.5 mm incl. Rubber seals	**960 693 06**
M 12 counter-plug with 5 m cable	**960 693 05**

ADDITIONAL INFORMATION:

The LED Signal Tower KOMPAKT 36 is also available in an Ex version (see page 251).

TECHNICAL DIAGRAMS:

see page 278

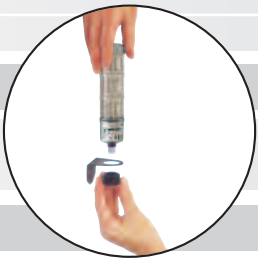

Also available in a ready-to-use version with the widely used M 12 plug

2 tier 3 tier

CE | PG | 109 g | 125 g | IP65 | +50°C -20°C | PLC

697 LED Signal Tower KOMPAKT 71



- Completely pre-assembled
- Three colour combinations
- LED Permanent light
- 70 mm diameter
- Life duration up to 50,000 hrs
- Also available with USB Interface

Life duration up to 50,000 hrs

TECHNICAL SPECIFICATIONS:

Dimensions (Ø x Height):	2 tier: 70 x 140 mm 3 tier: 70 x 175 mm
Housing:	Housing parts PC Terminal element: PA fibreglass, high-impact
Fixing:	Base/Bracket mounting Tube mounting
Connection:	Screw terminal max. 2.5 mm² Contact protection according to VDE
Cable entry:	Cable diameter max. 14 mm
Operating voltage:	24 V ⎓
Current consumption:	40 mA per tier



Base with tube (accessory)

ORDER SPECIFICATIONS:

KOMPAKT 71

		Mounting	Order no.
2 tier	red/green	base/bracket mounting	**697 010 55**
	red/green	tube mounting	**697 410 55**
3 tier	red/yellow/green	base/bracket mounting	**697 000 55**
	red/yellow/green	tube mounting	**697 400 55**

KOMPAKT 71 with negative logic (common +)

		Mounting	Order no.
3 tier	red/yellow/green	base/bracket mouting	**697 100 55**
	red/yellow/green	tube mounting	**697 500 55**

KOMPAKT 71 with USB Interface

		Mounting	Order no.
3 tier	red/yellow/green	tube mounting	**697 430 53**

Completely pre-assembled tower with integrated USB terminal element.
No additional voltage supply or hardware is required.

TECHNICAL DIAGRAMS:

see page 279

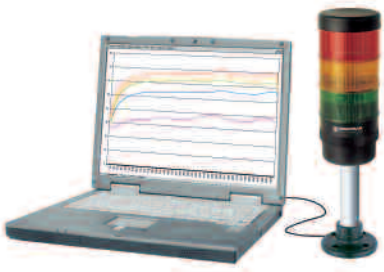

KOMPAKT 71 with USB Interface (Assembly without laptop and accessories)

2 tier 3 tier

CE PCT 170 g 200 g IP65 +50°C -20°C PLC

WERMA SIGNALTECHNIK

Accessories for KOMPAKT 71



ORDER SPECIFICATIONS ACCESSORIES KOMPAKT 71:

Contact box for cable exit at side, with mounting material	**975 840 01**
Contact box with magnetic base and cable exit at side	**975 840 04**
Bracket for tube mounting with cable gland	**960 000 01**
Bracket for surface mounting with cable gland	**960 000 02**
Bracket for base mounting with concealed cable entry, incl. rubber seals	**960 000 14**
Bracket for 1-sided mounting, incl. rubber seals	**975 840 85**
Bracket for 2-sided mounting, incl. rubber seals	**975 840 86**
Tube with clamp, Ø 25 mm 250 mm long, with cable gland	**960 000 18**
Tube Ø 25 mm, all anodized aluminium	
100 mm long	**975 845 10**
250 mm long	**975 840 25**
400 mm long	**975 840 40**
600 mm long	**975 840 60**
800 mm long	**975 840 80**
1000 mm long	**975 840 03**
Foldaway Base incl. rubber seals, suitable for tube, Ø 25 mm, all anodized aluminium (Technical specifications see page 35)	**960 000 30**
Tube Ø 25 mm, plastic for mounting the Terminal Element directly on the Foldaway Base	**960 000 31**
Base for tube mounting Ø 25 mm, plastic, incl. rubber seal	**975 840 90**
Base for tube mounting Ø 25 mm, metal, incl. rubber seal, recommended for tube lengths of 400 mm and longer	**975 840 91**
Base with integrated tube, Ø 25 mm, 110 mm long, plastic, incl. rubber seal	**975 840 10**
Adaptor for tube mounting, Ø 25 mm / 1/2" NPT thread	**975 840 02**
Adaptor for single hole mounting Ø 25 mm, M 18	**960 000 25**
Cable gland for surface mounting M 16 x 1.5 mm	**960 000 04**

TECHNICAL DIAGRAMS:

see page 292 onwards

de*SIGN* 42



de*SIGN* 42 – LED Signal Tower with high-quality stainless steel housing

In the machine building sector a trend towards a greater emphasis on design has become apparent. The design of a machine and its accessories convey the manufacturer's quality statement to the customer. Form, colour and aesthetics are increasingly being borne in mind as purchasing criteria.

The LED signal tower de*SIGN* 42, with its high quality stainless steel housing is an ideal accompaniment to modern design-oriented machines, uniquely combining cool elegance with optimal functionality. With its innovative form, the stainless steel housing underscores the design of the customer product, stylishly harmonising with its overall appearance.



The advantages at a glance

- LED Signal Tower in award-winning metal design
- Winner of the red dot design award for superlative design quality
- Clear lenses ensure signalling effect even in direct sunlight
- LED Permanent light elements have a life duration of up to 50,000 hrs
- Can be operated with a PLC control system

reddot design award
winner 2005

LED Signal Tower de*SIGN* 42



reddot design award
winner 2005

- **High-quality stainless steel housing**
- **Award-winning design – Winner of the red dot design award 2005**
- **Clear lenses ensure signalling effect even in direct sunlight**

TECHNICAL SPECIFICATIONS:

Life duration up to 50,000 hrs

Dimensions (Ø x Height):	2 tier: 42 x 220 mm 3 tier: 42 x 254 mm
Housing:	Stainless steel, brushed
Fixing:	Installation mounting for Ø 22.5 mm (M 22 x 1.5 mm)
Connection:	Cable, 2 m long, included in assembly
Current consumption:	40 mA per tier

ORDER SPECIFICATIONS:

		Connection	24 V ⎓
2 tier	red/green	cable	**694 010 55**
	red/yellow	cable	**694 020 55**
3 tier	red/yellow/green	cable	**694 000 55**



ACCESSORIES:

Surface housing single	**975 109 02**
Bracket, stainless steel (Protection rating IP 33)	**960 694 01**

TECHNICAL DIAGRAMS:

see page 278

2 tier 3 tier

CE PG 600 g 650 g IP65 +50°C -20°C PLC

Flat*SIGN*



Innovative LED Signal Tower in with curved front

The new LED signal tower Flat*SIGN* stands out from the competition with its range of innovative functions and unique advantages: in particular its aesthetically pleasing, curved design which facilitates a 160° viewing angle. This guarantees exceptional signal visibility, even from the side.

If no signal is active, the flat LED signal tower blends into the background – without distracting from the design of the machine or its environment.

Wide range of applications

The Flat*SIGN* can be deployed in a wide range of applications: from logistics, warehousing and materials handling to machine and plant engineering. Thanks to its high quality and appearance it is also ideally suited for building services applications. The high protection rating IP 65 ensures it can also be used outside.

The key advantages

- Permanent or blinking light selectable
- High build quality and appearance
- 160° viewing angle – the signal is clearly visible from the side
- Also available with integrated loud audible signal (depending on the variant, either a buzzer or multi-tone sounder)
- Multi-Tone Sounder with 8 adjustable tones
- Flexible, user-friendly mounting options and simple connection
- Comprehensive fixing kit available as accessory

NEW: Customer specific design variants available (see page 71)



Comprehensive fixing kit

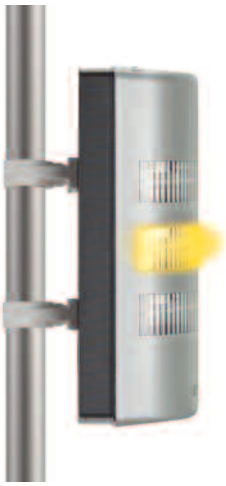

Flat*SIGN* is ideal for mounting on flat surfaces such as walls or enclosures.
The comprehensive fixing kit, available as an accessory, permits more mounting options.

Fixing kit options
The kit consists of an adaptor, two tube clamps and fixing parts providing a wide range of mounting options:

- If the signal tower is to be connected via surface wiring, then it can be simply attached using the adaptor.
- The adaptor also enables the tower to be quickly and simply mounted onto electrical installation back-boxes.
- In addition, the adaptor enables simple mounting onto aluminium profiles.
- For tube mounting (Ø 24 - 25 mm) the adaptor and the two tube clamps are employed.

WERMA SIGNALTECHNIK

691

Flat*SIGN* with transparent housing

NEW



In its inactive state, the signal tower blends into the background thanks to its colourless, translucent housing

- **Innovative LED signal tower with curved front**
- **160° signal visibility – the signal is clearly visible from the side**
- **Permanent or blinking light selectable**
- **With optional integrated, high-output buzzer**
- **Simple, user-friendly mounting**
- **Comprehensive fixing kit for a wide range of mounting options (accessory)**

TECHNICAL SPECIFICATIONS:

Life duration up to 50,000 hrs

Dimensions (L x H x W):	195 mm x 105 mm x 45 mm
Lower part:	PC-ABS, black
Upper part:	PC, transparent
Lens:	PC, transparent
Fixing:	Wall mounting
Connection:	Screw terminal max. 1.5 mm²
Current consumption:	Optical signal: 30 mA per tier Audible signal: 30 mA
Light effects:	Permanent or blinking light selectable
Audible signal:	Buzzer or multi-tone sounder (8 tones)

ORDER SPECIFICATIONS:

Flat*SIGN* without Audible Signal	24 V ⎓	115-230 V ~
red/yellow/green	**691 100 55**	**691 100 68**
Flat*SIGN* with Audible Signal	24 V ⎓	115-230 V ~
Audible Signal	Multi-Tone Sounder	Buzzer
red/yellow/green	**691 200 55**	**691 200 68**

Play Sound www.werma.com



The fixing kit consists of two tube clamps and an adaptor

ACCESSORIES:

Fixing kit **975 691 01**
Contents: 2 tube clamps for tube (Ø 24 - 25 mm) and adaptor

The fixing kit enables tube mounting (Ø 24 - 25 mm) or attachment to aluminium profile, over flush-mounted back-boxes or for surface-wiring options.

No special accessories needed for mounting on a flat surface.



Innovative fixing kit for flexible and versatile mounting options

TECHNICAL DIAGRAMS:

see page 278

CE 240 g IP65 +50°C -30°C 80 dB 8

691 Flat*SIGN* in Metal Design

NEW



Flat*SIGN* in metallic finish

- Innovative LED signal tower with curved front
- 160° signal visibility – the signal is clearly visible from the side
- Permanent or blinking light selectable
- With optional integrated, high-output buzzer
- Simple, user-friendly mounting
- Comprehensive fixing kit for a wide range of mounting options (accessory)

TECHNICAL SPECIFICATIONS:

Life duration up to 50,000 hrs

Dimensions (L x H x W):	195 mm x 105 mm x 45 mm
Lower part:	PC-ABS, black
Upper part:	PC, transparent
Lens:	PC, transparent
Fixing:	Wall mounting
Connection:	Screw terminal max. 1.5 mm²
Current consumption:	Optical signal: 30 mA per tier Audible signal: 30 mA
Light effects:	Permanent or blinking light selectable
Audible signal:	Buzzer or multi-tone sounder (8 tones)

ORDER SPECIFICATIONS:

Flat*SIGN* without Audible Signal	24 V ⎓	115-230 V ~
red/yellow/green	**691 300 55**	**691 300 68**
Flat*SIGN* with Audible Signal	24 V ⎓	115-230 V ~
Audible Signal	Multi-Tone Sounder	Buzzer
red/yellow/green	**691 400 55**	**691 400 68**

Play Sound www.werma.com



The fixing kit enables attachment to aluminium profiles (accessories)

ACCESSORIES:

Fixing kit **975 691 01**
Contents: 2 tube clamps for tube (Ø 24 - 25 mm) and adaptor

The fixing kit enables tube mounting (Ø 24 - 25 mm) or attachment to aluminium profile, over flush-mounted back-boxes or for surface-wiring options.

No special accessories needed for mounting on a flat surface.



Thanks to the curved front, the signal is also clearly from the side

TECHNICAL DIAGRAMS:

see page 278



Clear lenses ensure signalling effect even in direct sunlight

CE | 240 g | IP65 | +50°C / -30°C | 80 dB | 8

WERMA SIGNALTECHNIK



Design Highlights Flat*SIGN*

Set design trends

Attractive industrial design is becoming increasingly important, even in the mechanical engineering sector. With its aesthetically pleasing Flat*SIGN* signal tower, WERMA has already taken a step in this direction.

Combining an attractive appearance with **excellent functionality and high build quality**, the signal tower meets the high standards expected of a device "made in Germany". With its curved front, it blends inconspicuously into machine housings and installations of a range of different sizes.

The extended range of colour and design variants make it especially suited to **building services applications** - and as an **optical access control** device it provides additional design options.

Individuality through colours, patterns and designs

In addition to form, good industrial design is also expressed through colour. In this regard the Flat*SIGN* proves itself highly adaptable as it is now available in a **colour of your choice.**

You can choose from the complete range of **RAL colours**, as well as **special designs** such as wood or metallic effects and even a zebra pattern.

The colour can be used to blend the signal tower seamlessly into the machine or can add a stylish touch of colour to guarantee a design highlight.





The colour can be used to blend the signal tower Flat*SIGN* seamlessly into its environment.

Simple ordering procedure





With a stylish touch of colour the Flat*SIGN* can guarantee a design highlight

The **technical specifications** of the Flat*SIGN* signal tower can be found on page 69 and 70.

All you need to do is to tell us the RAL colour you require. All the colours of the RAL spectrum are available as standard. Alternatively we can develop a **special design** together with you.

The **Flat*SIGN* features** such as the curved design, the high signal visibility even from the side and the simple mounting continue to be available in the colour of your choice.

Vario*SIGN*

Vario*SIGN* – Innovative signal towers with unique functions and a range of advantages

The LED signal tower Vario*SIGN* stands out from the competition with its range of unique features and advantages as well as its revolutionary, innovative form.

If no signal is active, the LED tower blends into the background with its colourless, translucent housing - without distracting from the design of the machine. Only in the event of an active signal is the tower filled with colour, making its presence known with its large, attention-grabbing illuminated surface.

Thus the signal tower combines a maximum optical effect with modern machine forms and designs.



The advantages at a glance

- Mechanical modularity of the three tiers replaced by electronic modularity
- Colours and light effects, depending on the variant, can be individually set via DIP switch and changed at any time
- High build quality and appearance
- Award-winning design – winner of the „iF product design award 2010"
- Light effect visible from one or two sides as required
- With optional integrated, high output buzzer
- Variants available with adjustable, attention-grabbing lighting effects

Adjustable lighting configuration and mounting positions



Tier-by-tier illumination of the lighting body

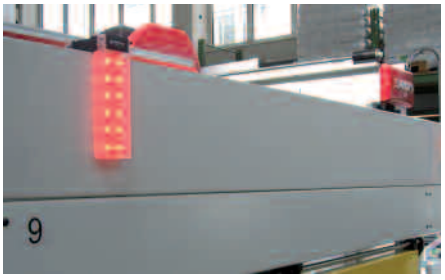

Colour intensive, complete illumination

Depending on the variant, a tier-by-tier or complete illumination of the lighting body is possible.

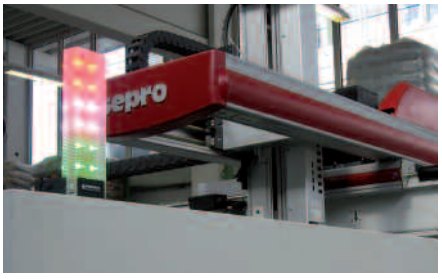

Lighting body positioned upwards



Lighting body positioned downwards

Depending on the application, the lighting body of the Vario*SIGN* signal tower can be positioned to point upwards, downwards or horizontally.

690 Vario*SIGN* – red/yellow/green



Fixed, three-tier colour distribution in red, yellow and green

- LED signal tower with permanent lights in red, yellow and green
- Preset, three-tier colour distribution
- 1 or 2 sided illumination
- With optional integrated, high output buzzer

TECHNICAL SPECIFICATIONS:

Life duration up to 50,000 hrs

Dimensions (L x H x W):	62 mm x 220 mm x 90 mm
Housing:	PC/ABS-Blend, black
Lens:	PC, transparent
Fixing:	Base mounting
Connection:	Screw terminal max. 1.5 mm²
Current consumption:	Optical: 55 mA per tier
	Buzzer: 20 mA

ORDER SPECIFICATIONS:

Vario*SIGN* without Buzzer	24 V ⎓
1-sided	**690 330 55**
2-sided	**690 320 55**
Vario*SIGN* with Buzzer	24 V ⎓
1-sided	**690 310 55**
2-sided	**690 300 55**

Play Sound www.werma.com



In its inactive state, the signal tower blends into the background thanks to its colourless, translucent housing

ADDITIONAL INFORMATION:

Award Winning Design! LED Signal Tower Vario*SIGN* wins "iF product design award 2010"



WERMA Signaltechnik has won the prestigious "iF product design award 2010". The company received the prize for the design and manufacture of its "Vario*SIGN*" signal tower. The jury selected the WERMA product from around 2,500 submissions from 39 countries. The product succeeded in standing out within a highly qualified and competitive international field.



Design as a success factor especially in times of economic uncertainty

Especially in economically turbulent times, design functions as a success and value creation factor and, according to the jury, many of the products assessed set new standards. In the words of the chairman of the jury, Fritz Fenkler: "Good design is not borne from marketing measures, but is rather the product of skilled designers".

TECHNICAL DIAGRAMS:

see page 278

CE 240 g IP65 +50°C -30°C 85 dB

690 Vario*SIGN* – RGY



The colours red, yellow and green can adjusted via DIP switch for any required order or distribution

- LED signal tower with permanent lights in red, yellow and green
- Complete illumination of the lighting body in one colour possible (can be triggered externally)
- Colour distribution can be set and adjusted as required via DIP switch
- With optional integrated, high output buzzer

TECHNICAL SPECIFICATIONS:

Life duration up to 50,000 hrs

Dimensions (L x H x W):	62 mm x 220 mm x 90 mm
Housing:	PC/ABS blend, black
Lens:	PC, transparent
Fixing:	Base mounting
Connection:	Screw terminal max. 1.5 mm²
Current consumption:	Optical: depending on the colour combination, up to 120 mA Buzzer: 20 mA

ORDER SPECIFICATIONS:

Vario*SIGN* without Buzzer	24 V ⎓
1-sided	**690 230 55**
2-sided	**690 220 55**
Vario*SIGN* with Buzzer	24 V ⎓
1-sided	**690 210 55**
2-sided	**690 200 55**

Play Sound www.werma.com

TECHNICAL DIAGRAMS:

see page 278

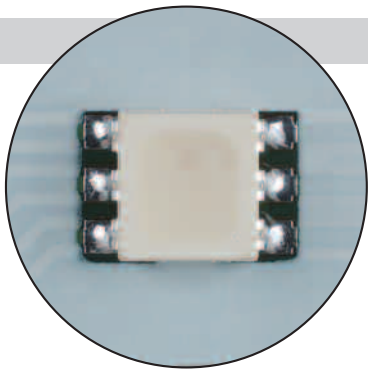

Completely flexible colour distribution thanks to RGY LEDs



Attention-grabbing illumination of the entire lighting body in one colour (can be triggered externally)

CE 260 g IP65 +50°C -30°C 85 dB

WERMA SIGNALTECHNIK



Attention-grabbing illumination of the entire lighting body in one colour (a choice of 7 colours, can be triggered externally)

- LED signal tower with permanent light and additional light effects
- 7 colours
- Complete illumination of the lighting body in one colour possible (can be triggered externally)
- Colour distribution can be set and adjusted as required via DIP switch
- With integrated, high volume buzzer

TECHNICAL SPECIFICATIONS:

Life duration up to 50,000 hrs

Dimensions (L x H x W):	62 mm x 220 mm x 90 mm
Housing:	PC/ABS blend, black
Lens:	PC, transparent
Fixing:	Base mounting
Connection:	Screw terminal max. 1.5 mm²
Current consumption:	Optical: depending on the colour, up to 300 mA max. Buzzer: 20 mA
Possible colours:	Red, yellow, green, clear, blue, violet, turquoise
Lighting effects:	Tier-by-tier illumination: Flashing light Complete illumination: EVS

ORDER SPECIFICATIONS:

VarioSIGN with light effects and Buzzer	24 V ⎓	
1-sided	**690 010 55**	Play Sound www.werma.com
2-sided	**690 000 55**	

TECHNICAL DIAGRAMS:

see page 278

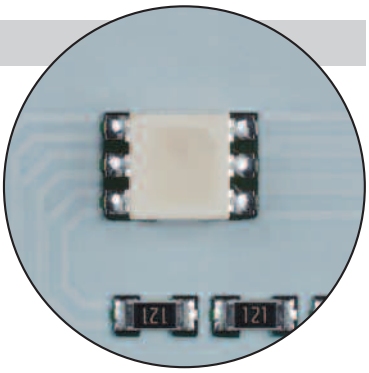

Thanks to RGB LEDs 7 different colours can be set



The "EVS" light effect ensures a maximum attention-grabbing effect (can be set with complete illumination)

CE 260 g IP65 +50°C -30°C 85 dB

Clean*SIGN*









Clean*SIGN* – The LED Signal Tower in Hygienic Design

WERMA already has the appropriate solution to the challenges engineers and food manufacturers will have to face in the future: **The new LED signal tower Clean*SIGN*** has been specially developed and constructed for use in **food and hygiene areas** as well as **cleanroom applications**. Right from the start, existing standards and guidelines were given careful consideration (e.g. EHEDG* Documents 8 and 13, Machine Directive 2006/42/EG), and experts in the field of Hygienic Design were called upon for advice.

The new Clean*SIGN* is equipped with a series of sophisticated technical, constructional and design features which make a significant contribution to the safety of your products.

What is Hygienic Design?

The term, "Hygienic Design", stands for the hygienic and cleaning-friendly design of all machinery and components deployed in hygiene-relevant areas. The aim is the prevention of constructional weakspots that could increase hygiene-related dangers and the risk of infection.

What are the main applications?

In addition to use in food production, manufacturing processes in clean rooms are also potential application areas. The production and assembly of small and very sensitive parts such as electronic chips places the highest demands on air purity.

As the new Clean*SIGN* LED Signal Tower fulfils the high **Air Cleanliness Class 2**, it can be used in the semiconductor industry, microelectronics, medical research, pharmaceutical, optical and laser technology, aerospace engineering and nanotechnology.

Unique "Hygienic Design" Signal Tower

30° slope
- Min. 30° slope in accordance with EHEDG
- Allows fluids to drain quickly
- Ease of inspection
- Quick and simple cleaning

Compact design
- No uneven surfaces, grooves, raised or countersunk elements
- No additional joints where dirt could collect
- One-piece, welded construction

Terminal element and mounting
- Bracket in one piece
- No additional joints where dirt could collect

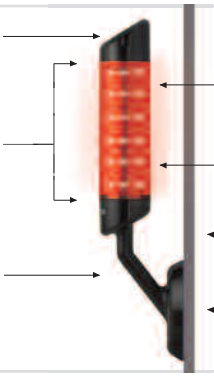

Polyamide housing
- Resistant to cleaning agents
- Food safe
- FDA approval (Food & Drug Administration)

Continuation of the 30° slope

Fixing and connection from the rear
- No holes at the front where dirt could collect
- Housing completely enclosed
- Pine Tree Clip® for quick and simple fixing

Durable seal
- Prevents any openings
- Hygienic material



The key advantages

- Food safety due to the absence of uneven surfaces, elevated or countersunk elements where contamination could collect
- Cleaning-friendly and hygienic design for optimal cleaning and disinfection
- Use of food safe materials (FDA approval) and resistant to cleaning agents
- **EHEDG* and Fraunhofer approvals**
- **Fulfills Air Cleanliness Class 2 for Cleanroom applications in accordance with DIN EN ISO 14644-1**
- Pine Tree Clip® for quick and simple fixing
- Electronic modularity of the individual tiers
- Maintenance-free thanks to LED technology with a long life duration of up to 50,000 hrs

WERMA SIGNALTECHNIK

Clean*SIGN* - red/yellow/green



Fixed, three tier colour distribution in red, yellow and green



In its inactive state, the signal tower blends into the background thanks to its translucent housing

- **LED Signal Tower for use in clean-room applications (Fraunhofer IPA approval) and the food industry (EHEDG* approval)**
- **Permanent lights in red, yellow and green (SMD technology)**
- **Integrated, high-output buzzer (85 dB)**

TECHNICAL SPECIFICATIONS:

Life duration up to 50,000 hrs

Dimensions (L x H x W):	112 mm x 485 mm x 125 mm
Housing:	PA, black
Lens:	PA, transparent
Fixing:	Wall mounting, integrated mounting bracket
Connection:	Cable, 2 m long, included in the assembly
Current consumption:	Optical: up to 120 mA per tier Buzzer: 20 mA

ORDER SPECIFICATIONS:

Clean*SIGN* with Buzzer red/yellow/green	24 V ⎓ **695 300 55**

Play Sound www.werma.com

ADDITIONAL INFORMATION:

The new LED signal tower Clean*SIGN* has been specifically developed and constructed for use in the food and pharmaceutical industry as well as in cleanroom applications. Clean*SIGN* fulfills the ideal requirements to guarantee risk-free use in these sensitive applications:

• **EHEDG* approval for the food industry:** this approval confirms that strict design criteria have been met to avoid constructional weaknesses and to minimise the risk of contamination. Further details can be found in the illustration on page 76.

• **Fraunhofer IPA approval for cleanrooms:** enables the Clean*SIGN* to be used in **one the most demanding Air Cleanliness Classes (Class 2) in accordance with DIN EN ISO 14644-1** and therefore covers even the most sensitive cleanroom applications. This approval also confirms the chemical resistance of the signal tower housing against common cleaning agents.

*** EHEDG = European Hygienic Engineering and Design Group**
The goal of this consortium, made up of equipment manufacturers, food processing industries, research institutes and public health authorities, is the development and publishing of directives on hygiene technology for the processing and packaging of food products.

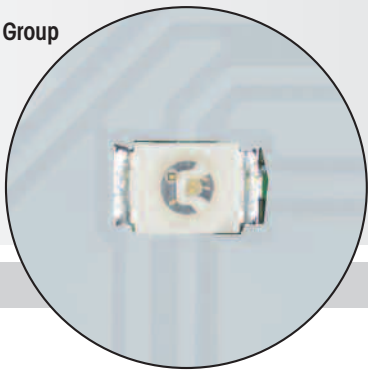

Fixed colour distribution with SMD technology

TECHNICAL DIAGRAMS:

see page 279



695 CleanSIGN - RGY



The colours red, yellow and green can set via DIP switch for any equired order or distribution



Attention-grabbing illumination in one colour (can be triggered externally)

- LED Signal Tower for use in clean-room applications (Fraunhofer IPA approval) and the food industry (EHEDG approval)
- Permanent light in red, yellow and green (RGY LEDs)
- Colour distribution can be set and adjusted via switch as required
- Complete illumination in one colour possible (can be triggered externally)
- Integrated, high-output buzzer (85 dB)

TECHNICAL SPECIFICATIONS:

Life duration up to 50,000 hrs

Dimensions (L x H x W):	112 mm x 485 mm x 125 mm
Housing:	PA, black
Lens:	PA, transparent
Fixing:	Wall mounting, integrated mounting bracket
Connection:	Screw terminal max. 1.5 mm²
Current consumption:	Optical: depending on the colour combination, 240 mA max. Buzzer: 20 mA

ORDER SPECIFICATIONS:

CleanSIGN with Buzzer	24 V ⎓
RGY-LED	**695 200 55**

Play Sound www.werma.com

ADDITIONAL INFORMATION:

Simple mounting
A "Pine Tree Clip®" enables quick and simple mounting. The attachment and connection of the tower is carried out from the rear. As a consequence, the housing is completely closed and holes are avoided.

Wide range of sophisticated design features
The new CleanSIGN from WERMA is equipped with a series of sophisticated technical, constructional and design features which make a significant contribution to the safety of your products.

For example, the CleanSIGN has no grooves or joints where dirt could collect, facilitating quick and easy cleaning.

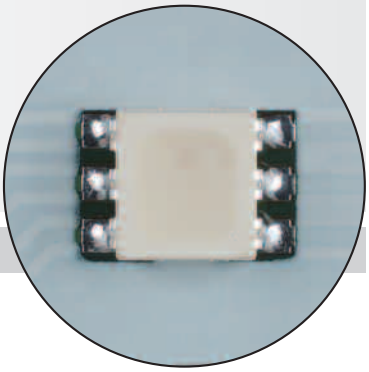

Completely flexible colour distribution thanks to RGY LEDs

TECHNICAL DIAGRAMS:

see page 279

CE · EHEDG · IPA · 550 g · IP67/IP69k · +50°C / -30°C · 85 dB

WERMA SIGNALTECHNIK

Clean*SIGN* - RGB



Complete illumination in one colour

- LED Signal Tower for use in clean-room applications (Fraunhofer IPA approval) and the food industry (EHEDG approval)
- Permanent light and additional light effects
- 7 colours selectable (RGB LEDs)
- Colour distribution can be set and adjusted via switch as required
- Complete illumination in one colour possible (can be triggered externally)

TECHNICAL SPECIFICATIONS:

Life duration up to 50,000 hrs

Dimensions (L x H x W):	112 mm x 485 mm x 125 mm
Housing:	PA, black
Lens:	PA, transparent
Fixing:	Wall mounting, integrated mounting bracket
Connection:	Screw terminal max. 1.5 mm²
Current consumption:	Optical: depending on the colour combination, 250 mA max. Buzzer: 20 mA
Possible colours:	Red, yellow, green, clear, blue, violet, turquoise
Light effects:	Tier-by-tier illumination: Blinking light Complete illumination: EVS*

ORDER SPECIFICATIONS:

Clean*SIGN* with Buzzer	24 V ⎓
RGB-LED	**695 000 55**

Play Sound www.werma.com



The "EVS"* light effect ensures a maximum attention-grabbing effect (can be set with complete illumination)

ADDITIONAL INFORMATION:

Additional light effects and 7 colours
The use of RGB LEDs guarantees complete flexibility: In addition to the permanent light, additional light effects (EVS* LED or blinking light) can also be set. Furthermore, the entire tower or the 3 individual tiers can be illuminated in seven different colours (red, yellow, green, blue, clear, violet, turquoise).

With complete illumination any one of the seven colours can be triggered externally.

*** EVS** = Enhanced Visibility System or Enhanced Visibility System.
Further informationen can be found in the chapter „Tech-Talk" beginning on page 326.

TECHNICAL DIAGRAMS:

see page 279

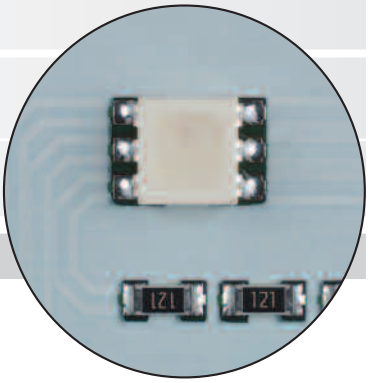

7 different colour settings from RGB LEDs


WERMA
220 X00 99
IEC
60947-5-1
200V ~
max. 3 pol

Overview Installation Beacons

LED Permanent Beacons

231 and 231 Economy

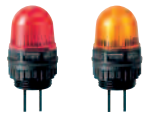

M 22 x 1.5 mm
Page 86

230 and 230 Economy



M 20 x 1.5 mm
Page 84

207



M 22 x 1.5 mm
Page 90

801



for Ø 37 mm (PG 29)
Page 93

816



for Ø 37 mm (PG 29)
Page 95

LED Permanent Beacons (Multicolour)

NEW

239 for AS-Interface



M 22 x 1.5 mm
5 colours
Page 88

NEW

816 with USB Interface



for Ø 37 mm (PG 29)
200,000 colours
Page 96

Permanent Beacons

206



M 22 x 1.5 mm
Page 89

216



M 22 x 1.5 mm
Page 91

800



for Ø 37 mm (PG 29)
Page 92

815



for Ø 37 mm (PG 29)
Page 94

Flashing Beacons

232



M 22 x 1.5 mm
Page 97

208



M 22 x 1.5 mm
Page 98

802



for Ø 37 mm (PG 29)
Page 99

817



for Ø 37 mm (PG 29)
Page 100

LED Blinking Light

816



for Ø 37 mm (PG 29)
Page 101

Bulbs

LED Bulbs Page 166 + 167
Bulb Overview Page 168 + 169

Further information

Further information about “Optical Signal Devices” can be found in the chapter “Tech-Talk” beginning on page 328.

Optical Signal Devices

WERMA Installation Beacons



Installation beacons are designed for mounting in drill holes. A characteristic of this type of beacon is the rear fixture using a central nut

Features

- Large variety of versions: Available as permanent, blinking, flashing or LED beacons
- IP 65 for indoor and outdoor applications
- Modern design
- Beacons available in five colours

NEW
- LED Multicolour Beacons with 5 or up to 200,000 colours in one beacon
- Beacon diameter between 25 and 75 mm
- Available in three thread diameters

Sizes

COMPARISON OF WERMA INSTALLATION BEACONS

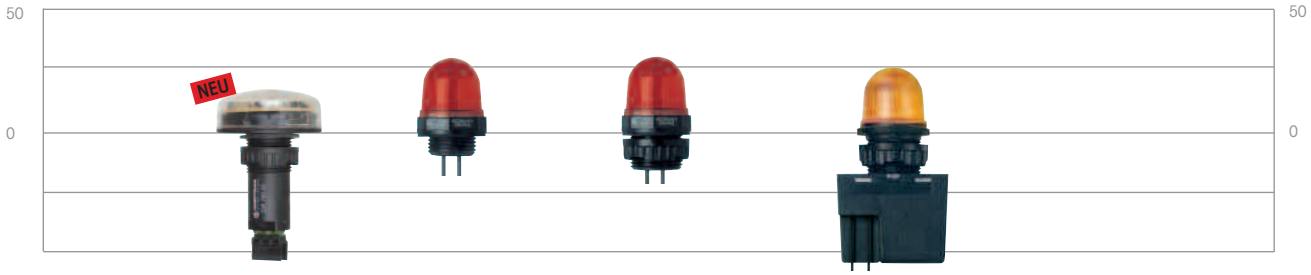

Series	239	230	231	232
Thread	M 22	M 20	M 22	M 22
Ø	50 mm	29 mm	29 mm	29 mm
Height (Protrusion from panel)	22 mm	32 mm	32 mm	32 mm
Page	88	84	86	97

COMPARISON OF WERMA INSTALLATION BEACONS

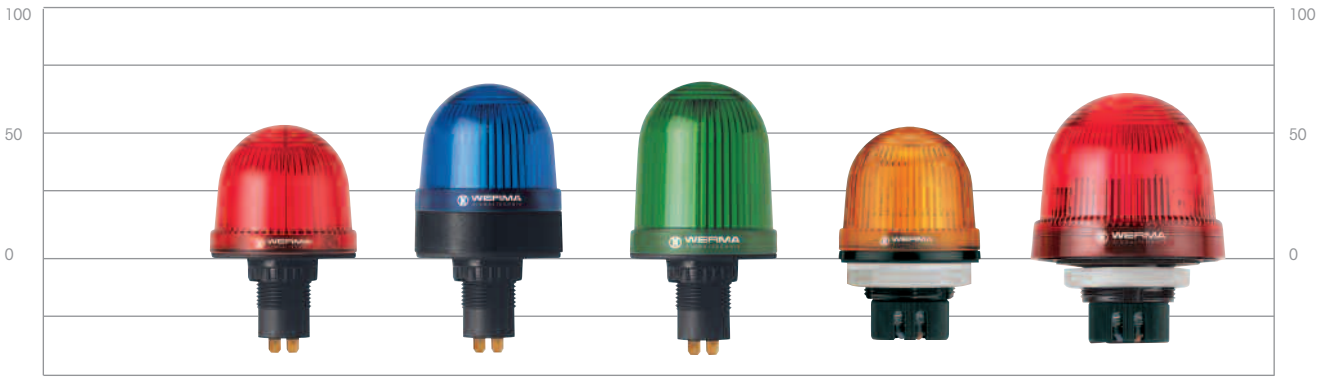

Series	206	207/208	216	800/801/802	815/816/817
Thread	M 22	M 22	M 22	PG 29	PG 29
Ø	57 mm	58 mm	57 mm	57 mm	75 mm
Height (Protrusion from panel)	53 mm	69 mm	69 mm	54 mm	66 mm
Page	89	90/98	91	92/93/99	94/95/100

WERMA SIGNALTECHNIK

Variety of light signals



Installation beacons from WERMA assist in indicating process conditions, risks and imminent dangers in modern production areas clearly and in good time.

The urgency of the required course of action can be indicated by the colour as well as the type and duration of the signal. As a basic principle, the colours red, yellow, green, blue and clear are employed. The available light effects in WERMA installation beacons range from a permanent light and a long life LED permanent light to an attention-grabbing flashing light.

Permanent light and LED Permanent light



With the assistance of a permanent light or an LED permanent light the operator is made aware of a specific condition or is instructed to carry out a certain course of action.

For safety reasons signal beacons are increasingly equipped with light emitting diodes. The failure of optical signal devices is significantly reduced as a result of the longer life duration of LEDs. Furthermore, LEDs offer a range of advantages compared to conventional light bulbs for example lower current consumption, greater resistance to shocks, vibrations and other mechanical stress.



NEW LED Beacons (Multicolour)

WERMA now offers two new LED multicolour beacons. These provide the user with several colours in just one beacon. The RGB LEDs employed in the new 816 LED Beacon (Multicolour) enable the user to choose from a broad range of more than 200,000 colours. In addition various light effects can also be set via USB: whether a permanent or a blinking light, or colour sequencing of all colours.

The new 239 LED Installation Beacon (Multicolour) for AS-Interface offers the five standard colours red, yellow, green, clear and blue. The user can signal several conditions with only one device.



Flashing Light

The deployment of a flashing signal can generate even more attention than a permanent light. The reason for this is to be found in the very short flash duration.

Inside each Xenon flashing beacon there is a capacitor which stores electrical energy. Within the space of a few milliseconds this energy is discharged within the flash tube, generating a very intense light impulse.

The life duration of a flash tube is heavily dependent on the respective load. The average life duration in permanent operation is 4 x 10^6 flashes.



230 LED Installation Beacon



- LED Permanent beacon with M 20 thread for applications such as limit and cable-operated switches
- Extremely high light intensity
- Ideal for installation in limited space due to short thread

Life duration up to 100,000 hrs

TECHNICAL SPECIFICATIONS:

Dimensions (Ø x Height):	29 mm x 32 mm (Protrusion from panel)
Housing:	PC/ABS-Blend
Lens:	PC, transparent
Connection:	2 wires, c. 115 mm long
Fixing:	Installation mounting for Ø 20,5 mm (M 20 x 1.5 mm)

Seal included in assembly.

ORDER SPECIFICATIONS:

Voltage	12 V ⎓	24 V ⎓	115 V ~	230 V ~
Current consumption	80 mA	45 mA	15 mA	20 mA
red	**230 100 54**	**230 100 55**	**230 100 67**	**230 100 68**
yellow	**230 300 54**	**230 300 55**	**230 300 67**	**230 300 68**
clear		**230 400 55**		

Further colours on request.

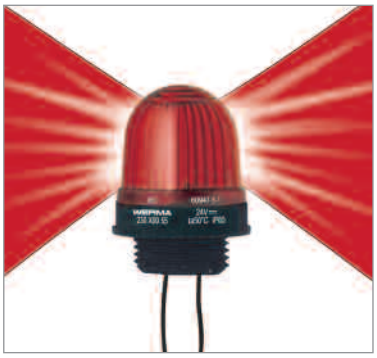

Mainly sidewards illumination

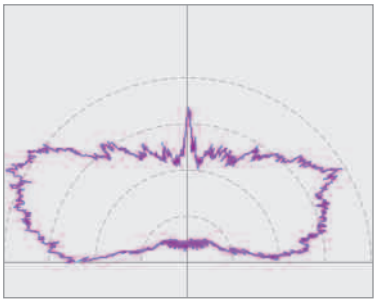

Illustration of the light distribution for the LED Installation Beacon 230

TECHNICAL DIAGRAMS:

see page 270



The LED Installation Beacon 230 is also available in an Ex version (see page 252)



The LED Installation Beacon 230 can for example be used in applications with cable-operated switches or limit switch devices

Sizes of Permanent Beacons



24 V

PLC

WERMA SIGNALTECHNIK

230 Economy LED Installation Beacon



- **Competitively priced LED beacon**
- **New LED technology with upward illumination**
- **Ideal for installation in limited space due to short thread**
- **LED Permanent Beacon with M 20 thread for the limit and cable-operated switches**

Life duration up to 100,000 hrs

TECHNICAL SPECIFICATIONS:

Dimensions (Ø x Height):	29 mm x 32 mm (Protrusion from panel)
Housing:	PC/ABS-Blend
Lens:	PC, transparent
Connection:	2 wires, c. 115 mm long
Fixing:	Installation mounting for Ø 20.5 mm (M 20 x 1.5 mm)

Seal included in assembly.



Upward illumination

ORDER SPECIFICATIONS:

Voltage	24 V ⎓
Current consumption	30 mA
red	**230 104 55**
yellow	**230 304 55**
clear	**230 404 55**

ADDITIONAL INFORMATION:

LED Installation Beacon 230 Economy attains an extremely high level of visibility thanks to completely new LED technology with upward illumination.

This cost-effective and innovative solution draws upon the most advanced technology and is furthermore resistant to vibration and other mechanical stress.

The LED Beacon 230 has a short M 20 thread and is especially suitable for installation in small spaces such as cable-operated switches or limit switches.



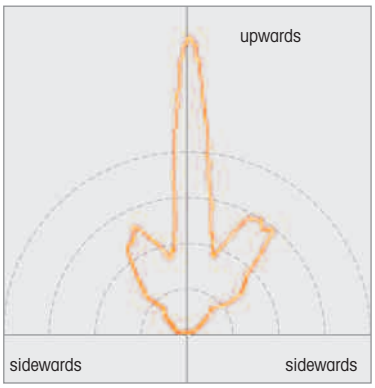

Illustration of the light distribution for the Economy LED Installation Beacon 230

TECHNICAL DIAGRAMS:

see page 270

Sizes of Permanent Beacons



c UL us CE 12 g IP65 +50°C -20°C PLC

231 LED Installation Beacon





- **LED Permanent Beacon with M 22 thread for the control panel/switchgear programme**
- **Extremely high light intensity**

Life duration up to 100,000 hrs

TECHNICAL SPECIFICATIONS:

Dimensions (Ø x Height):	29 mm x 32 mm (Protrusion from panel)
Housing:	PC/ABS-Blend
Lens:	PC, transparent
Connection:	2 wires, c. 105 mm long
Fixing:	Installation mounting for Ø 22.5 mm (M 22 x 1.5 mm)

Nut and seal included in assembly.

ORDER SPECIFICATIONS:

Voltage	12 V ⎓	24 V ⎓	115 V ~	230 V ~
Current consumption	80 mA	45 mA	15 mA	20 mA
red	**231 100 54**	**231 100 55**	**231 100 67**	**231 100 68**
green	**231 200 54**	**231 200 55**	**231 200 67**	**231 200 68**
yellow	**231 300 54**	**231 300 55**	**231 300 67**	**231 300 68**
clear	**231 400 54**	**231 400 55**	**231 400 67**	**231 400 68**
blue	**231 500 54**	**231 500 55**	**231 500 67**	**231 500 68**

TECHNICAL DIAGRAMS:

see page 270

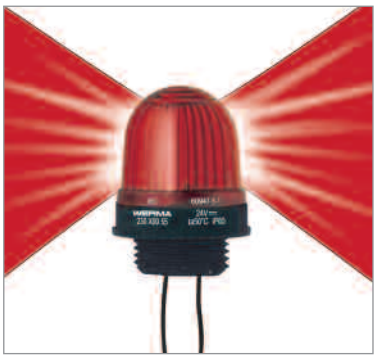

Mainly sidewards illumination

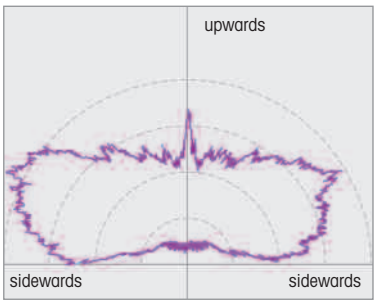

Illustration of the light distribution for the LED Installation Beacon 231



The LED Installation Beacon 231 is also available in Ex version (see page 253)

Sizes of Permanent Beacons



c UL us CE PG 16 g IP65 +50°C -20°C 24 V PLC

WERMA SIGNALTECHNIK

231 Economy LED Installation Beacon



- **Competitively priced LED beacon**
- **New LED technology with upward illumination**
- **LED Permanent Beacon with M 22 thread for the control panel/switch-gear programme**

Life duration up to 100,000 hrs

TECHNICAL SPECIFICATIONS:

Dimensions (Ø x Height):	29 mm x 32 mm (Protrusion from panel)
Housing:	PC/ABS-Blend
Lens:	PC, transparent
Connection:	2 wires, c. 105 mm long
Fixing:	Installation mounting for Ø 2.5 mm (M 22 x 1.5 mm)

Nut and seal included in assembly.



Upward illumination

ORDER SPECIFICATIONS:

Voltage	24 V ⎓
Current consumption	30 mA
red	**231 104 55**
green	**231 204 55**
yellow	**231 304 55**
clear	**231 404 55**
blue	**231 504 55**

ADDITIONAL INFORMATION:

LED Installation Beacon 231 Economy attains an extremely high level of visibility thanks to completely new LED technology with upward illumination.

This cost-effective and innovative solution draws upon the most advanced technology and is further-more resistant to vibration and other mechanical stress.

The LED Beacon 231 has an M 22 thread and is especially suitable for use in control panel/switch gear applications.



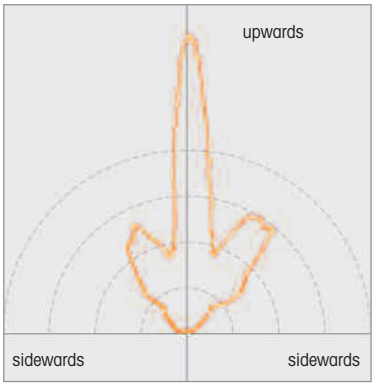

Illustration of the light distribution for the Economy LED Installation Beacon 231

TECHNICAL DIAGRAMS:

see page 270

Sizes of Permanent Beacons



c UL us CE PG 16 g IP65 +50°C -20°C PLC

239 LED Installation Beacon (Multicolour) for AS-Interface



- 5 colours possible in one beacon
- Colours can be triggered and changed via AS-Interface
- 2 pin terminal for easy AS-Interface connection

Life duration up to 50,000 hrs

TECHNICAL SPECIFICATIONS:

Dimensions (Ø x Height):	50 mm x 22 mm (Protrusion from panel)
Housing:	PC, black
Lens:	PC, transparent
Fixing:	Installation mounting for Ø 22.5 mm (M 22 x 1.5 mm) with anti-twist device
Connection:	Screw terminal with wire protection max. 1.5 mm²
Power supply AS-Interface:	Via bus conduction
Operating voltage:	25 V ... 31.6 V according to the AS-Interface specification
Current consumption:	≤ 100 mA
Specification:	V3.0
IO-Code:	8_{HEX}
ID-Code:	A_{HEX}
ID2-Code:	E_{HEX}
Colour options:	Red, yellow, green, clear, blue

Nut and seal included in assembly.



Five colours in one beacon:
Red, yellow, green, clear and blue

ORDER SPECIFICATIONS:

Red/yellow/green/clear/blue (Multicolour)	**239 780 55**

ADDITIONAL INFORMATION:

Extended addressing in accordance with V3.0
The LED Installation Beacon (Multicolour) for AS-Interface is suitable for the extended addressing (A/B technology) of up to 62 modules. The beacon is supplied with power via the bus.

Thanks to its M 22 installation dimension, the signal device can easily be installed via single-hole mounting, and is simply connected to the bus cable using a two-pole screw connector.



Thanks to its compact dimensions and the AS-Interface technology, the LED beacon 239 is especially suited to automation applications

TECHNICAL DIAGRAMS:

see page 270

Sizes of Permanent Beacons



CE · 42 g · IP65 · +50°C / -20°C · PLC

WERMA SIGNALTECHNIK

Installation Permanent Beacon



- **Optimised illumination**
- **360° visibility**
- **Suitable for use in the 22 mm standard control panel/switchgear programme**
- **Simple connection by means of 6.3 mm spades**
- **Bulb change via removal of lens**



Bulb change via removal of lens (LED bulb as accessory)

TECHNICAL SPECIFICATIONS:

Dimensions (Ø x Height):	57 mm x 53 mm (Protrusion from panel)
Housing:	PA-GF, high impact
Lens:	PC, transparent
Connection:	Spades 6.3 x 0.8 mm Finger-proof model according to BGV A2, when used with insulated spades
Fixing:	Installation mounting for Ø 22.5 mm (M 22 x 1.5 mm) with anti-twist device
Operating voltage:	Max. 48 V
Bulb socket:	B15d Watt max.
Bulb change:	Via removal of lens

Nut and seal included in assembly. Bulb not included in assembly.

ORDER SPECIFICATIONS:

Voltage	12-48 V
red	**206 100 00**
green	**206 200 00**
yellow	**206 300 00**
clear	**206 400 00**
blue	**206 500 00**

Further colours and voltages on request.

ACCESSORIES:





Accessories

Bulb BA15d
total length max. 42 mm

Voltage	12 V	24 V	30 V
	955 840 34	**955 840 35**	**955 840 32**

LED bulb BA15d
total length max. 42 mm

Voltage	24 V≂
Current consumption	< 45 mA
red	**956 100 75**
green	**956 200 75**
yellow	**956 300 75**
white	**956 400 75**
blue	**956 500 75**

Sizes of Permanent Beacons



TECHNICAL DIAGRAMS:

see page 269

207 LED Installation Permanent Beacon





- **Optimised illumination**
- **360° visibility**
- **Suitable for use in the 22 mm standard control panel/switchgear programme**
- **Simple connection by means of 6.3 mm spades**

Life duration up to 100,000 hrs

TECHNICAL SPECIFICATIONS:

Dimensions (Ø x Height):	58 mm x 69 mm (Protrusion from panel)
Housing:	PA-GF, high impact
Lens:	PC, transparent, Ring: PC
Connection:	Spades 6.3 x 0.8 mm Finger-proof model according to BGV A2, when used with insulated spades
Fixing:	Installation mounting for Ø 22.5 mm (M 22 x 1.5 mm) with anti-twist device

ORDER SPECIFICATIONS:

Voltage	24 V≂	115 V~	230 V~
Current consumption	45 mA	25 mA	25 mA
red	**207 100 75**	**207 100 67**	**207 100 68**
green	**207 200 75**	**207 200 67**	**207 200 68**
yellow	**207 300 75**	**207 300 67**	**207 300 68**

Further colours and voltages on request.

TECHNICAL DIAGRAMS:

see page 269

Sizes of Permanent Beacons



c UL us CE PG 55 g IP65 +50°C -20°C 24 V PLC

WERMA SIGNALTECHNIK

216 Installation Permanent Beacon



- **Optimised illumination**
- **360° visibility**
- **Suitable for use in the 22 mm standard control panel/switchgear programme**
- **Simple connection by means of 6.3 mm spades**
- **Bulb change via removal of lens**

TECHNICAL SPECIFICATIONS:

Dimensions (Ø x Height):	57 mm x 69 mm (Protrusion from panel)
Housing:	PA-GF, high impact
Lens:	PC, transparent
Connection:	Spades 6.3 mm x 0.8 mm Finger-proof model according to BGV A2, when used with insulated spades
Fixing:	Installation mounting for Ø 22.5 mm (M 22 x 1.5 mm) with anti-twist device
Operating voltage:	Max. 48 V
Bulb socket:	B15d, 7 Watt max.
Bulb change:	Via removal of lens

Nut and seal included in assembly. Bulb not included in assembly.



Bulb change via removal of lens (LED bulb as accessory)

ORDER SPECIFICATIONS:

Voltage	12 - 48 V
red	**216 100 00**
green	**216 200 00**
yellow	**216 300 00**
clear	**216 400 00**
blue	**216 500 00**

ACCESSORIES:

Bulb BA15d, total length max. 52 mm

Voltage	12 V (7 W)	24 V (7 W)	30 V (5 W)
	955 015 34	**955 015 35**	**955 840 32**

LED bulb BA15d, total length max. 42 mm

Voltage	24 V≂
Current consumption	< 45 mA
red	**956 100 75**
green	**956 200 75**
yellow	**956 300 75**
white	**956 400 75**
blue	**956 500 75**





Accessories

TECHNICAL DIAGRAMS:

see page 270

Sizes of Permanent Beacons



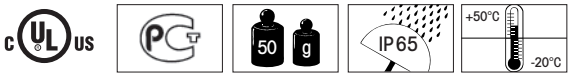

800 Installation Permanent Beacon



- **Tamper-proof – bulb change via rear access with bayonet mechanism**
- **With anti-twist device (as accessory)**
- **Available with tube adaptor as free-standing beacon**

TECHNICAL SPECIFICATIONS:

Dimensions (Ø x Height):	57 mm x 54 mm (Protrusion from panel)
Housing:	PC/ABS-Blend Socket: PA-GF, high impact
Lens:	PC, transparent
Fixing:	Installation mounting for Ø 37 mm (PG 29)
Connection:	Screw terminal max. 2.5 mm² Strain relief, Contact protection according to VDE, flex radial or axial laid
Operating voltage:	Max. 250 V
Bulb socket:	B15d, 7 Watt max.
Bulb change:	Via rear access with bayonet mechanism

Bulb not included in assembly.



Bulb change via rear access with bayonet mechanism

ORDER SPECIFICATIONS:

Voltage	12 - 240 V
red	**800 100 00**
green	**800 200 00**
yellow	**800 300 00**
clear	**800 400 00**
blue	**800 500 00**

Further colours and voltages on request.

ACCESSORIES:

Bulb BA15d, 5 W, total length max. 42 mm

Voltage	12 V	24 V	30 V	115 V	230 V
	955 840 34	**955 840 35**	**955 840 32**	**955 840 57**	**955 840 38**

Tube adaptor	**975 812 01**
Base with integrated tube, Ø 25 mm, 110 mm long, plastic	**975 840 10**
Base for tube mounting	**975 840 90**
Base for base mounting	**975 812 02**
Tube Ø 25 mm, all anodized aluminium	
100 mm long	**975 845 10**
250 mm long	**975 840 25**
400 mm long	**975 840 40**
Anti-twist device	**975 815 22**
Surface housing IP 65	
for 1 Installation Beacon	**975 815 03**
for 2 Installation Beacons	**975 815 07**
for 3 Installation Beacons	**975 815 08**
for 4 Installation Beacons	**975 109 05**



Accessories

TECHNICAL DIAGRAMS:

see page 282

Sizes of Permanent Beacons



801 LED Installation Permanent Beacon





Tube adaptor as accessory



Accessories

- **Long-life LED Permanent Beacon**
- **With anti-twist device (as accessory)**
- **Available with tube adaptor as free-standing beacon**

Life duration up to 100,000 hrs

TECHNICAL SPECIFICATIONS:

Dimensions (Ø x Height):	57 mm x 54 mm (Protrusion from panel)
Housing:	PC/ABS-Blend Socket: PA-GF, high impact
Lens:	PC, transparent
Fixing:	Installation mounting for Ø 37 mm (PG 29)
Connection:	Screw terminal max. 2.5 mm^2 Strain relief, Contact protection according to VDE, flex radial or axial laid

ORDER SPECIFICATIONS:

Voltage	24 V≂	115 V~	230 V~
Current consumption	45 mA	25 mA	25 mA
red	**801 100 75**	**801 100 67**	**801 100 68**
green	**801 200 75**	**801 200 67**	**801 200 68**
yellow	**801 300 75**	**801 300 67**	**801 300 68**

Further colours and voltages on request.

ACCESSORIES:

Tube adaptor	**975 812 01**
Base with integrated tube, Ø 25 mm, 110 mm long, plastic	**975 840 10**
Base for tube mounting	**975 840 90**
Base for base mounting	**975 812 02**
Tube Ø 25 mm, all anodized aluminium	
100 mm long	**975 845 10**
250 mm long	**975 840 25**
400 mm long	**975 840 40**
Anti-twist device	**975 815 22**
Surface housing IP 65	
for 1 Installation Beacon	**975 815 03**
for 2 Installation Beacons	**975 815 07**
for 3 Installation Beacons	**975 815 08**
for 4 Installation Beacons	**975 109 05**

TECHNICAL DIAGRAMS:

see page 282

Sizes of Permanent Beacons



24 V

PLC

815 Installation Permanent Beacon



- **Vandal-proof construction withstands every mechanical and natural challenge**
- **High impact polycarbonate lens (up to 20 Joules)**
- **Tamper-proof – bulb change via rear access with bayonet mechanism**



Vandal-proof construction

TECHNICAL SPECIFICATIONS:

Dimensions (Ø x Height):	75 mm x 66 mm (Protrusion from panel)
Housing:	PC/ABS-Blend, Socket: PA-GF, high impact
Lens:	PC transparent Shock resistance 20 Joules according to EN 50014
Fixing:	Installation mounting for Ø 37 mm (PG 29)
Connection:	Screw terminal max. 2.5 mm² Strain relief, Contact protection according to VDE, flex radial or axial laid
Operating voltage:	Max. 250 V
Bulb socket:	B15d, 10 Watt max.
Bulb change:	Via rear access with bayonet mechanism

Bulb not included in assembly.

ORDER SPECIFICATIONS:

Voltage	12 - 240 V
red	**815 100 00**
green	**815 200 00**
yellow	**815 300 00**
clear	**815 400 00**
blue	**815 500 00**

Further colours and voltages on request.

ACCESSORIES:



Accessories

Bulb BA15d, 5 W, total length max. 42 mm

Voltage	12 V	24 V	30 V	115 V	230 V
	955 840 34	**955 840 35**	**955 840 32**	**955 840 57**	**955 840 38**

Tube adaptor	**975 812 01**
Base with integrated tube, Ø 25 mm, 110 mm long, plastic	**975 840 10**
Base for tube mounting	**975 840 90**
Base for base mounting	**975 812 02**
Tube Ø 25 mm, all anodized aluminium	
100 mm long	**975 845 10**
250 mm long	**975 840 25**
400 mm long	**975 840 40**
Anti-twist device	**975 815 22**
Surface housing IP 65	
for 1 Installation Beacon	**975 815 03**
for 2 Installation Beacons	**975 815 07**
for 3 Installation Beacons	**975 815 08**
for 4 Installation Beacons	**975 109 05**

Sizes of Permanent Beacons



TECHNICAL DIAGRAMS:

see page 282

WERMA SIGNALTECHNIK

816 LED Installation Permanent Beacon





Tube adaptor as accessory



Surface housing as accessory

- **Long-life LED Permanent Beacon**
- **Vandal-proof construction withstands every mechanical and natural challenge**
- **High impact polycarbonate lens (up to 20 Joules)**

Life duration up to 100,000 hrs

TECHNICAL SPECIFICATIONS:

Dimensions (Ø x Height):	75 mm x 66 mm (Protrusion from panel)
Housing:	PC/ABS-Blend Socket: PA-GF, high impact
Lens:	PC transparent Shock resistance 20 Joules according to EN 50014
Fixing:	Installation mounting for Ø 37 mm (PG 29)
Connection:	Screw terminal max. 2.5 mm² Strain relief, Contact protection according to VDE, flex radial or axial laid

ORDER SPECIFICATIONS:

Voltage	24 V≂	115 V~	230 V~
Current consumption	45 mA	25 mA	25 mA
red	**816 100 55**	**816 100 67**	**816 100 68**
green	**816 200 55**	**816 200 67**	**816 200 68**
yellow	**816 300 55**	**816 300 67**	**816 300 68**
clear	**816 400 55**	**816 400 67**	**816 400 68**

Further colours and voltages on request.

ACCESSORIES:

Tube adaptor	**975 812 01**
Base with integrated tube, Ø 25 mm, 110 mm long, plastic	**975 840 10**
Base for tube mounting	**975 840 90**
Base for base mounting	**975 812 02**
Tube Ø 25 mm, all anodized aluminium	
100 mm long	**975 845 10**
250 mm long	**975 840 25**
400 mm long	**975 840 40**
Anti-twist device	**975 815 22**
Surface housing IP 65	
for 1 Installation Beacon	**975 815 03**
for 2 Installation Beacons	**975 815 07**
for 3 Installation Beacons	**975 815 08**
for 4 Installation Beacons	**975 109 05**

Accessories see page 94

TECHNICAL DIAGRAMS:

see page 282

Sizes of Permanent Beacons



24 V

816 LED Beacon (Multicolour) with USB Interface



- More than 200,000 colours possible in one beacon
- Direct triggering of the beacon via USB Interface
- No additional power supply or hardware necessary
- Compatible with USB 2.0 and 1.1

Life duration up to 50,000 hrs

TECHNICAL SPECIFICATIONS:

Dimensions (Ø x Height):	75 mm x 66 mm (Protrusion from panel)
Housing:	ABS/PC-Blend, black
Lens:	PC, transparent Shock resistance 20 J according to EN 50014
Fixing:	Installation mounting for Ø 37 mm (PG 29) Base and wall mounting possible (accessories)
Connection:	Mini USB 2.0 downward cable outlet
Power supply:	Via USB
Colour options:	More than 200,000 colours (RGB LED)
Suitable for:	Windows 2000, Windows XP, Windows Vista, Windows 7
Assembly:	LED beacon, demo software, driver and USB connection cable included, 5 m long



Simple triggering as no special software is required

ORDER SPECIFICATIONS:

Voltage	5 V (USB-Connection)
Current consumption	≤ 500 mA
Clear lens	**816 480 53**

ACCESSORIES:

You will find the appropriate accessories for base or tube mounting on page 94 or under wwww.werma.com

ADDITIONAL INFORMATION:

The new installation LED Beacon with USB interface is compatible with USB 2.0 and 1.1.

A wide range of colours and light effects can be quickly and simply programmed by the customer and altered at any time.



With RGB LEDs more than 200.000 colours can be selected

TECHNICAL DIAGRAMS:

see page 282

Sizes of Permanent Beacons



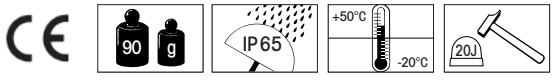

WERMA SIGNALTECHNIK

Installation Flashing Beacon





- **Extremely bright Xenon Flash**
- **Multivoltage Flashing Beacon**
- **Simple installation by clicking the beacon onto the housing**
- **22 mm installation diameter for the control panel/switchgear programme**

TECHNICAL SPECIFICATIONS:

Dimensions (Ø x Height):	29 mm x 32 mm (Protrusion from panel)
Housing:	PC/ABS-Blend
Lens:	PC, transparent
Connection:	2 wires, c. 600 mm long
Fixing:	Installation mounting for Ø 22.5 mm (M 22 x 1.5 mm) with anti-twist device
Flash frequency:	1.5 Hz
Flash energy:	1 Ws
Life duration:	4 x 10^6 flashes

Nut and seal included in assembly.

ORDER SPECIFICATIONS:

Voltage	24 V≂ (10 - 100 V⎓) (20 - 72 V~)	115 V~	230 V~
Current consumption	140 mA	30 mA	20 mA
red	**232 100 55**	**232 100 67**	**232 100 68**
yellow	**232 300 55**	**232 300 67**	**232 300 68**

TECHNICAL DIAGRAMS:

see page 270

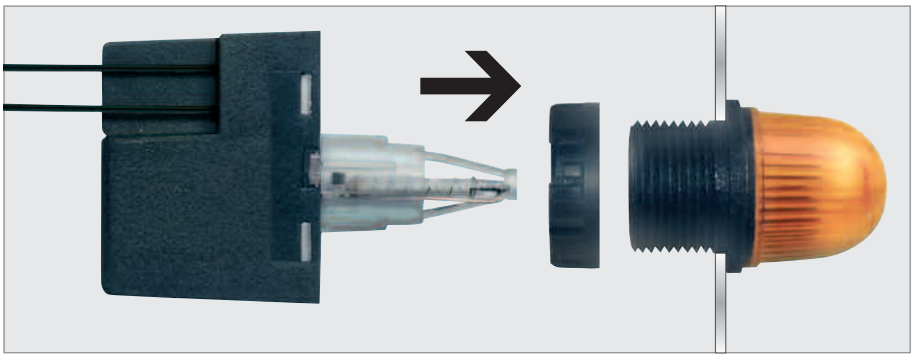

Simple mounting thanks to click-on electronics module

Sizes of Flashing Beacons



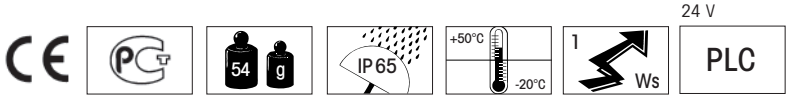

208 Installation Flashing Beacon





- **Optimised illumination**
- **360° visibility**
- **Suitable for use in the 22 mm standard control panel/switchgear programme**
- **Simple connection by means of 6.3 mm spades**

TECHNICAL SPECIFICATIONS:

Dimensions (Ø x Height):	58 mm x 69 mm (Protrusion from panel)
Housing:	PA-GF, high impact
Lens:	PC, transparent; Ring: PC
Connection:	Spades 6.3 x 0.8 mm Finger-proof model according to BGV A2, when used with insulated spades
Fixing:	Installation mounting for Ø 22.5 mm (M 22 x 1.5 mm) with anti-twist device
Flash frequency:	c. 0.75 Hz
Flash energy:	1 Ws
Life duration:	4 x 10^6 flashes

Nut and seal included in assembly.

ORDER SPECIFICATIONS:

Voltage	24 V ⎓	115 V ~	230 V ~
Current consumption	100 mA	25 mA	30 mA
red	**208 100 55**	**208 100 67**	**208 100 68**
yellow	**208 300 55**	**208 300 67**	**208 300 68**

Further colours and voltages on request.

TECHNICAL DIAGRAMS:

see page 269

Sizes of Flashing Beacons



WERMA SIGNALTECHNIK

802 Installation Flashing Beacon





Tube adaptor as accessory



Accessories

- **Light intensive Xenon flash**
- **With anti-twist device (as accessory)**
- **Available with tube adaptor as free-standing beacon**

TECHNICAL SPECIFICATIONS:

Dimensions (Ø x Height):	57 mm x 54 mm (Protrusion from panel)
Housing:	PC/ABS-Blend Socket: PA-GF, high impact
Lens:	PC, transparent
Fixing:	Installation mounting for Ø 37 mm (PG 29)
Connection:	Screw terminal max. 2.5 mm^2 Strain relief, Contact protection according to VDE, flex radial or axial laid
Flash frequency:	0.75 Hz
Flash energy:	1 Ws
Life duration:	4 x 10^6 flashes

ORDER SPECIFICATIONS:

Voltage	24 V≂	115 V~	230 V~
Current consumption	100 mA	20 mA	30 mA
red	**802 100 55**	**802 100 67**	**802 100 68**
yellow	**802 300 55**	**802 300 67**	**802 300 68**

Further colours and voltages on request.

ACCESSORIES:

Tube adaptor	**975 812 01**
Base with integrated tube, Ø 25 mm, 110 mm long, plastic	**975 840 10**
Base for tube mounting	**975 840 90**
Base for base mounting	**975 812 02**
Tube Ø 25 mm, all anodized aluminium	
100 mm long	**975 845 10**
250 mm long	**975 840 25**
400 mm long	**975 840 40**
Anti-twist device	**975 815 22**
Surface housing IP 65	
for 1 Installation Beacon	**975 815 03**
for 2 Installation Beacons	**975 815 07**
for 3 Installation Beacons	**975 815 08**
for 4 Installation Beacons	**975 109 05**

TECHNICAL DIAGRAMS:

see page 282

Sizes of Flashing Beacons





817 Installation Flashing Beacon



- **Light intensive Xenon flash**
- **Vandal-proof construction withstands every mechanical and natural challenge**
- **High impact polycarbonate lens (up to 20 Joules)**



Tube adaptor as accessory



Accessories

TECHNICAL SPECIFICATIONS:

Dimensions (Ø x Height):	75 mm x 66 mm (Protrusion from panel)
Housing:	PC/ABS-Blend Socket: PA fibreglass, high-impact
Lens:	PC transparent Shock resistance 20 Joules according to EN 50014
Fixing:	Installation mounting for Ø 37 mm (PG 29)
Connection:	Screw terminal max. 2.5 mm^2 Strain relief, Contact protection according to VDE, flex radial or axial laid
Flash frequency:	c. 1 Hz
Flash energy:	2 Ws
Life duration:	4 x 10^6 flashes

ORDER SPECIFICATIONS:

Voltage	12 V⎓	24 V⎓	115 V~	230 V~
Current consumpt.	<195 mA	125 mA	20 mA	35 mA
red	**817 100 54**	**817 100 55**	**817 100 67**	**817 100 68**
yellow	**817 300 54**	**817 300 55**	**817 300 67**	**817 300 68**

Further colours and voltages on request.

ACCESSORIES:

Tube adaptor	**975 812 01**
Base with integrated tube, Ø 25 mm, 110 mm long, plastic	**975 840 10**
Base for tube mounting	**975 840 90**
Base for base mounting	**975 812 02**
Tube Ø 25 mm, all anodized aluminium	
100 mm long	**975 845 10**
250 mm long	**975 840 25**
400 mm long	**975 840 40**
Anti-twist device	**975 815 22**
Surface housing IP 65	
for 1 Installation Beacon	**975 815 03**
for 2 Installation Beacons	**975 815 07**
for 3 Installation Beacons	**975 815 08**
for 4 Installation Beacons	**975 109 05**

TECHNICAL DIAGRAMS:

see page 282

Sizes of Flashing Beacons



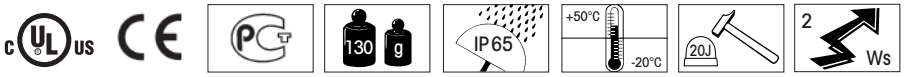

WERMA SIGNALTECHNIK

816 LED Installation Blinking Beacon





Tube adaptor as accessory



Surface housing (accessory)

- **Vandal-proof construction withstands every mechanical and natural challenge**
- **High impact polycarbonate lens (up to 20 Joules)**

Life duration up to 50,000 hrs

TECHNICAL SPECIFICATIONS:

Dimensions (Ø x Height):	75 mm x 66 mm (Protrusion from panel)
Housing:	PC/ABS-Blend Socket: PA-GF, high impact
Lens:	PC transparent Shock resistance 20 Joules according to EN 50014
Fixing:	Installation mounting for Ø 37 mm (PG 29)
Connection:	Screw terminal max. 2.5 mm² Strain relief, Contact protection according to VDE, flex radial or axial laid
Blink frequency:	c. 1 Hz

ORDER SPECIFICATIONS:

Voltage	24 V≂
Current consumption	25 mA
red	**816 110 55**
yellow	**816 310 55**

Further colours and voltages on request.

ACCESSORIES:

Tube adaptor	**975 812 01**
Base with integrated tube, Ø 25 mm, 110 mm long, plastic	**975 840 10**
Base for tube mounting	**975 840 90**
Base for base mounting	**975 812 02**
Tube Ø 25 mm, all anodized aluminium	
100 mm long	**975 845 10**
250 mm long	**975 840 25**
400 mm long	**975 840 40**
Anti-twist device	**975 815 22**
Surface housing IP 65	
for 1 Installation Beacon	**975 815 03**
for 2 Installation Beacons	**975 815 07**
for 3 Installation Beacons	**975 815 08**
for 4 Installation Beacons	**975 109 05**

Accessories see page 100.

TECHNICAL DIAGRAMS:

see page 282

Sizes of Flashing Beacons



c UL us CE

PC | 130 g | IP65 | +50°C -20°C | 20J | PLC


WERMA
SIGNALTECHNIK

Overview Free-standing

Permanent Beacons

200/203
201/204 (LED)



Height: 65.5/101 mm
Page 106 + 107

209
209 (LED)



Height: 87/103 mm
Page 108 + 109

210/213
211/214 (LED)



Height: 81/107 mm
Page 110 + 111

219
219 (LED)



Height: 103/119 mm
Page 112 + 113

850/851/852



Height: 88/108/101 mm
Page 114

220/223
221/224 (LED)



Height: 79/105 mm
Page 116 + 117

806 Monitorable LED Permanent Beacon NEW



Height: 97 mm
Page 118

853 (LED)



Height: 85 mm
Page 119

826



Height: 137 mm
Page 120

826 Monitored Permanent Beacon



Height: 137 mm
Page 121

829 LED Permanent/ Blinking Beacon



Height: 137 mm
Page 122

829 LED Permanent/Blinking/ Rotating Beacon



Height: 137 mm
Page 123

829 Monitored LED Permanent Beacon



Height: 137 mm
Page 124

895



Height: 148 mm
Page 125

839 (LED)



Height: 189 mm
Page 126

280 (LED)



Height: 218 mm
Page 127

280 LED Obstruction Light



Height: 218 mm
Page 129

281 LED Obstruction Light NEW



Height: 205 mm
Page 130

Flashing Beacons

202 Flashing
205 Flashing



Height: 81/107 mm
Page 131

209 Flashing Beacon



Height: 103 mm
Page 132

212 Flashing
215 Flashing



Height: 97/123 mm
Page 133

219 Flashing Beacon



Height: 119 mm
Page 134

222 Flashing
225 Flashing



Height: 79/105 mm
Page 135

853 LED Double Flash NEW



Height: 85 mm
Page 136

853 LED EVS NEW



Height: 85 mm
Page 137

897 Double Flash



Height: 148 mm
Page 138

830 Flashing
835 Flashing



Height: 133/172 mm
Page 139

827 Blinking Beacon



Height: 137 mm
Page 140

828 Flashing Beacon



Height: 137 mm
Page 141

829 LED Double Flash NEW



Height: 137 mm
Page 142

829 LED EVS NEW



Height: 137 mm
Page 143

839 Double Flash Beacon



Height: 189 mm
Page 144

838 Double Flash Beacon



Height: 218 mm
Page 145

280 LED Double Flash NEW



Height: 218 mm
Page 146

280 LED EVS NEW



Height: 218 mm
Page 147

Rotating Beacons

885 Rotating Mirror Beacon



Height: 151 mm
Page 148

839 Rotating Mirror
839 LED Rotating



Height: 189 mm
Page151 + 152

829 LED Rotating Beacon NEW



Height:137 mm
Page 153

280 LED Rotating Beacon NEW



Height: 218 mm
Page 154

884 Rotating Beacon



Height: 218 mm
Page 155

883 Rotating Mirror Beacon

Height: 218 mm
Page 156

880 Rotating Mirror Beacon

Height: 215 mm
Page 157

881 Rotating Mirror Beacon

Height: 204 mm
Page 158

Traffic Lights

894 LED Traffic Light

2 or 3 tier
Page 164

894 LED Traffic Light

1, 2 or 3 tier
Page 165

890 (LED) Traffic Light

Height: 154 mm
Page 159 + 160

853 LED Traffic Light NEW

Height: 85 mm
Page 163

Bulbs and Further Information

LED Bulbs Page 166 + 167
Bulbs Overview Page 168 + 169

Further information about “Optical Signal Devices” can be found in the chapter “Tech-Talk” beginning on page 328.

Optical Signal Devices

WERMA Free-standing Beacons

Free-standing beacons are designed for direct fixing to the respective object. The basic types of available fixings are base, bracket and tube mounting.



Features

- Base, bracket or tube mounting
- Increasing use of LEDs as light source
- High protection rating IP 65
- NEW Beacons with the exceptional protection ratings IP 66 and IP 69k
- NEW Large variety of versions: Available as permanent, blinking, flashing, LED EVS or LED light beacons
- Beacon diameter between 57 and 153 mm
- Modern design

Sizes

COMPARISON OF WERMA FREE-STANDING BEACONS



Series	200	220	210	209	219	853
Ø	57 mm	75 mm	57 mm	57 mm	57 mm	85 mm
Height	65.5 mm	79 mm	81 mm	87 mm	103 mm	85 mm
Page	106	116	110	108	112	118

COMPARISON OF WERMA FREE-STANDING BEACONS



Series	826	885	839	280/883	884
Ø	98 mm	98 mm	153 mm	142 mm	142 mm
Height	137 mm	151 mm	189 mm	218 mm	218 mm
Page	120	148	126	127	155

WERMA SIGNALTECHNIK

Variety of light effects



Free-standing beacons from WERMA assist in indicating process conditions, risks and imminent dangers in modern production areas clearly and in good time. The urgency of the required course of action can be indicated by the colour as well as the type and duration of the signal. As a basic principle, the colours red, yellow, green, blue and clear are employed in the following variety of signals.

Permanent Light and LED Permanent Light



With the assistance of a permanent light or an LED permanent light the operator is made aware of a specific condition or is instructed to carry out a certain course of action.

WERMA provides free standing beacons with conventional bulbs as well as with long-life LED technology.

(LED) Flashing or Blinking Light and LED EVS Signal Beacon



The deployment of a flashing or blinking signal can generate even more attention than a permanent light. WERMA also provides an alternative long life LED Flash which has a significantly longer life duration of up to 50,000 hours with a considerably reduced power consumption.

NEW The stochastic, random flickering light EVS (Enhanced Visibility System) has been developed by WERMA on a neurobiological basis. As deployed in LED Beacons, this technology succeeds in generating an optimal attention level never previously reached by existing signal devices.

WERMA employs LEDs for its EVS system. A microprocessor triggers random light signals, which make the light appear extremely "agitated", thus generating a continuously high attention level amongst those in the vicinity – even when viewed out the corner of the eye.

Rotating Mirror Beacon and LED Rotating Signal Beacon



Inside each rotating mirror beacon is a halogen bulb, and a mirror to deflect the light in one direction. This generates a rotating light beam.

In contrast to conventional Rotating Mirror Beacons, the LED version generates the rotating signal by means of a set of LEDs which are triggered in sequence. As no mechanical components have been used at all, the beacon is completely maintenance-free.

200/203 Permanent Beacon



Permanent Beacon 200
(Base mounting)



Permanent Beacon 203 with
integrated mounting bracket



Accessories

- **Safe CAGE CLAMP® technology**
- **B15d socket integrated in the base**
- **Optimum illumination**
- **Available for base or bracket mounting**
- **Connection without the need to disassemble the product**

TECHNICAL SPECIFICATIONS:

Housing:	PA-GF, high impact
Lens:	PC, transparent
Connection:	CAGE CLAMP® technology max. 2.5 mm² Contact protection according to VDE
Cable entry:	Cable diameter max. 10 mm (200) Cable diameter 3-6 mm (203)

PERMANENT BEACON	**200**	**203**
Fixing:	Base mounting with flat seal	Bracket mounting cable gland M 12 x 1.5 mm
Dimensions (Ø x Height):	57 mm x 65.5 mm	57 mm x 91 mm
Operating voltage:	Max. 250 V	Max. 250 V
Bulb socket:	B15d, 7 Watt max.	B15d, 7 Watt max.
Bulb change:	Via removal of lens	Via removal of lens

Bulb not included in assembly.

ORDER SPECIFICATIONS:

	Base mounting 200	**Bracket mounting 203**
Voltage	12-240 V	12-240 V
red	**200 100 00**	**203 100 00**
green	**200 200 00**	**203 200 00**
yellow	**200 300 00**	**203 300 00**
clear	**200 400 00**	**203 400 00**
blue	**200 500 00**	**203 500 00**

ACCESSORIES:

Bulb BA15d, 5 W
total length max. 42 mm

Voltage	12 V	24 V	30 V	115 V	230 V
	955 840 34	**955 840 35**	**955 840 32**	**955 840 57**	**955 840 38**

LED bulb BA15d
total length max. 42 mm

Voltage	24 V≂		115 V~	230 V~
Current consumption	< 45 mA		< 15 mA	< 15 mA
red	**956 100 75**		**956 100 67**	**956 100 68**
green	**956 200 75**		**956 200 67**	**956 200 68**
yellow	**956 300 75**		**956 300 67**	**956 300 68**
white	**956 400 75**		**956 400 67**	**956 400 68**
blue	**956 500 75**		**956 500 67**	**956 500 68**

TECHNICAL DIAGRAMS: see page 269

Sizes of Permanent Beacons



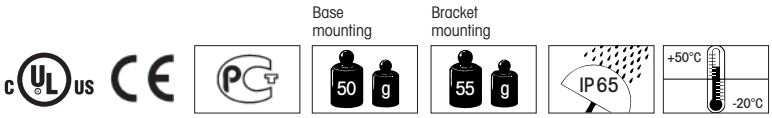

WERMA SIGNALTECHNIK

201/204 LED Permanent Beacon



LED Permanent Beacon 201
(Base mounting)



Permanent Beacon 204 with integrated mounting bracket

- Safe CAGE CLAMP® technology
- Optimum illumination
- Available for base or bracket mounting
- Connection without the need to disassemble the product

TECHNICAL SPECIFICATIONS:

Life duration up to 100,000 hrs

Housing:	PA-GF, high impact
Lens:	PC, transparent; Ring: PC
Connection:	CAGE CLAMP® technology max. 2.5 mm² Contact protection according to VDE
Cable entry:	Cable diameter max. 10 mm (201) Cable diameter 3-6 mm (204)

LED-PERMANENT BEACON	**201**	**204**
Fixing:	Base mounting with flat seal	Bracket mounting cable gland M 12 x 1.5 mm
Dimensions (Ø x Height):	58 mm x 81 mm	58 mm x 107 mm

ORDER SPECIFICATIONS:

Base mounting 201			
Voltage	24 V≂	115 V~	230 V~
Current consumption	45 mA	25 mA	25 mA
red	**201 100 75**	**201 100 67**	**201 100 68**
green	**201 200 75**	**201 200 67**	**201 200 68**
yellow	**201 300 75**	**201 300 67**	**201 300 68**

Bracket mounting 204			
Voltage	24 V≂	115 V~	230 V~
Current consumption	45 mA	25 mA	25 mA
red	**204 100 75**	**204 100 67**	**204 100 68**
green	**204 200 75**	**204 200 67**	**204 200 68**
yellow	**204 300 75**	**204 300 67**	**204 300 68**

Further colours and voltages on request.

TECHNICAL DIAGRAMS:

see page 269

Sizes of Permanent Beacons



Base mounting 66 g
Bracket mounting 72 g
IP65
+50°C
-20°C
24 V
PLC

209 Permanent Beacon



- Safe CAGE CLAMP® technology
- B15d socket integrated in the base
- Optimum illumination
- Tube mounting
- Single hole mounting possible with cable gland

TECHNICAL SPECIFICATIONS:

Dimensions (Ø x Height):	57 mm x 87 mm
Housing:	PA-GF, high impact
Lens:	PC, transparent Ring: PC
Connection:	CAGE CLAMP® technology max. 2.5 mm² Contact protection according to VDE
Cable entry:	Cable diameter max. 11 mm
Fixing:	Tube mounting M 25 x 1.5 mm
Operating voltage:	Max. 250 V
Bulb socket:	B15d, 7 Watt max.
Bulb change:	Via removal of lens

Bulb not included in assembly.



ORDER SPECIFICATIONS:

Voltage	12-240 V
red	**209 100 00**
green	**209 200 00**
yellow	**209 300 00**
clear	**209 400 00**
blue	**209 500 00**

ACCESSORIES:

Base with integrated tube, M 25 x 1.5 mm	**975 209 01**
Cable gland M 25 x 1.5 mm	**975 209 02**

Bulb BA15d, 5 W
total length max. 42 mm

Voltage	12 V	24 V	30 V	115 V	230 V
	955 840 34	**955 840 35**	**955 840 32**	**955 840 57**	**955 840 38**

LED bulb BA15d
total length max. 42 mm

Voltage	24 V≂	115 V~	230 V~
Current consumption	< 45 mA	< 15 mA	< 15 mA
red	**956 100 75**	**956 100 67**	**956 100 68**
green	**956 200 75**	**956 200 67**	**956 200 68**
yellow	**956 300 75**	**956 300 67**	**956 300 68**
white	**956 400 75**	**956 400 67**	**956 400 68**
blue	**956 500 75**	**956 500 67**	**956 500 68**



Accessories

TECHNICAL DIAGRAMS:

see page 269

Sizes of Permanent Beacons

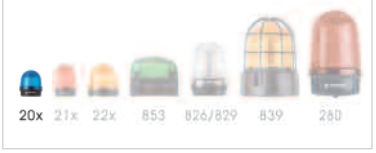

LED Permanent Beacon





Base with integrated tube (accessory)

- Safe CAGE CLAMP® technology
- Optimum illumination
- Tube mounting
- Single hole mounting possible with cable gland

TECHNICAL SPECIFICATIONS:

Life duration up to 100,000 hrs

Dimensions (Ø x Height):	58 mm x 103 mm
Housing:	PA-GF, high impact
Lens:	PC, transparent Ring: PC
Connection:	CAGE CLAMP® technology max. 2.5 mm² Contact protection according to VDE
Cable entry:	Cable diameter max. 11 mm
Fixing:	Tube mounting M 25 x 1.5 mm

ORDER SPECIFICATIONS:

Voltage	24 V≂	115 V~	230 V~
Current consumption	45 mA	25 mA	25 mA
red	**209 110 75**	**209 110 67**	**209 110 68**
green	**209 210 75**	**209 210 67**	**209 210 68**
yellow	**209 310 75**	**209 310 67**	**209 310 68**

ACCESSORIES:

Base with integrated tube, M 25 x 1.5 mm	**975 209 01**
Cable gland M 25 x 1.5 mm	**975 209 02**

TECHNICAL DIAGRAMS:

see page 269

Sizes of Permanent Beacons



24 V

PLC

210/213 Permanent Beacon



Permanent Beacon 210
(Base mounting)



Permanent Beacon 213 with
integrated mounting bracket





Accessories

Sizes of Permanent Beacons



- **Safe CAGE CLAMP® technology**
- **B15d socket integrated in the base**
- **Optimum illumination**
- **Available for base or bracket mounting**
- **Connection without the need to disassemble the product**

TECHNICAL SPECIFICATIONS:

Housing:	PA-GF, high impact
Lens:	PC, transparent
Connection:	CAGE CLAMP® technology max. 2.5 mm²
	Contact protection according to VDE
Cable entry:	Cable diameter max. 10 mm (210)
	Cable diameter 3-6 mm (213)

PERMANENT BEACON	**210**	**213**
Fixing:	Base mounting with flat seal	Bracket mounting cable gland M 12 x 1.5 mm
Dimensions (Ø x Height):	57 mm x 81 mm	57 mm x 107 mm
Operating voltage:	Max. 250 V	Max. 250 V
Bulb socket:	B15d, 10 Watt max.	B15d, 10 Watt max.
Bulb change:	Via removal of lens	Via removal of lens

Bulb not included in assembly.

ORDER SPECIFICATIONS:

	Base mounting 210	**Bracket mounting 213**
Voltage	12-240 V	12-240 V
red	**210 100 00**	**213 100 00**
green	**210 200 00**	**213 200 00**
yellow	**210 300 00**	**213 300 00**
clear	**210 400 00**	**213 400 00**
blue	**210 500 00**	**213 500 00**

ACCESSORIES:

Bulb BA15d, 7 W
total length max. 52 mm

Voltage	12 V	24 V	48 V	115 V	230 V
	955 015 34	**955 015 35**	**955 015 36**	**955 015 37**	**955 015 38**

LED bulb BA15d
total length max. 42 mm

Voltage	24 V≂	115 V~	230 V~
Current consumption	< 45 mA	< 15 mA	< 15 mA
red	**956 100 75**	**956 100 67**	**956 100 68**
green	**956 200 75**	**956 200 67**	**956 200 68**
yellow	**956 300 75**	**956 300 67**	**956 300 68**
white	**956 400 75**	**956 400 67**	**956 400 68**
blue	**956 500 75**	**956 500 67**	**956 500 68**

TECHNICAL DIAGRAMS: see page 269 + 270

Base mounting 55 g
Bracket mounting 61 g
IP65
+50°C
-20°C

WERMA SIGNALTECHNIK

211/214 LED Permanent Beacon



LED Permanent Beacon 211
(base mounting)



Permanent Beacon 214 with
integrated mounting bracket



Housing with
CAGE CLAMP® Connection

- Safe CAGE CLAMP® technology
- Optimum illumination
- Available for base or bracket mounting
- Connection without the need to disassemble the product

TECHNICAL SPECIFICATIONS:

Life duration up to 100,000 hrs

Housing:	PA-GF, high impact
Lens:	PC, transparent; Ring: PC
Connection:	CAGE CLAMP® technology max. 2,5 mm²
	Contact protection according to VDE
Cable entry:	Cable diameter max. 10 mm (211)
	Cable diameter 3-6 mm (214)

LED PERMANENT BEACON	**211**	**214**
Fixing:	Base mounting with flat seal	Bracket mounting cable gland M 12 x 1.5 mm
Dimensions (Ø x Height):	58 mm x 97 mm	58 mm x 123 mm

ORDER SPECIFICATIONS:

Base mounting 211			
Voltage	24 V≂	115 V~	230 V~
Current consumption	45 mA	25 mA	25 mA
red	**211 100 75**	**211 100 67**	**211 100 68**
green	**211 200 75**	**211 200 67**	**211 200 68**
yellow	**211 300 75**	**211 300 67**	**211 300 68**

Bracket mounting 214			
Voltage	24 V≂	115 V~	230 V~
Current consumption	45 mA	25 mA	25 mA
red	**214 100 75**	**214 100 67**	**214 100 68**
green	**214 200 75**	**214 200 67**	**214 200 68**
yellow	**214 300 75**	**214 300 67**	**214 300 68**

Further colours and voltages on request.

TECHNICAL DIAGRAMS:

see page 269 + 270

Sizes of Permanent Beacons



Base mounting 72 g | Bracket mounting 78 g | IP65 | +50°C -20°C | 24 V PLC

219 Permanent Beacon



- Safe CAGE CLAMP® technology
- B15d socket integrated in the base
- Optimum illumination
- Tube mounting
- Single hole mounting possible with cable gland



TECHNICAL SPECIFICATIONS:

Dimensions (Ø x Height):	57 mm x 103 mm
Housing:	PA-GF, high impact
Lens:	PC, transparent Ring: PC
Connection:	CAGE CLAMP® technology max. 2.5 mm² Contact protection according to VDE
Cable entry:	Cable diameter max. 11 mm
Fixing:	Tube mounting, M 25 x 1.5 mm
Operating voltage:	Max. 250 V
Bulb socket:	B15d, 10 Watt max.
Bulb change:	Via removal of lens

Bulb not included in assembly.

ORDER SPECIFICATIONS:

	12-240 V
red	**219 100 00**
green	**219 200 00**
yellow	**219 300 00**
clear	**219 400 00**
blue	**219 500 00**

ACCESSORIES:

Base with integrated tube, M 25 x 1.5 mm	**975 209 01**
Cable gland M 25 x 1.5 mm	**975 209 02**

Bulb BA15d, 7 W
total length max. 52 mm

Voltage	12 V	24 V	48 V	115 V	230 V
	955 015 34	**955 015 35**	**955 015 36**	**955 015 37**	**955 015 38**

LED bulb BA15d
total length max. 42 mm

Voltage	24 V≂	115 V~	230 V~
Current consumption	< 45 mA	< 15 mA	< 15 mA
red	**956 100 75**	**956 100 67**	**956 100 68**
green	**956 200 75**	**956 200 67**	**956 200 68**
yellow	**956 300 75**	**956 300 67**	**956 300 68**
white	**956 400 75**	**956 400 67**	**956 400 68**
blue	**956 500 75**	**956 500 67**	**956 500 68**



Accessories

TECHNICAL DIAGRAMS:

see page 270

Sizes of Permanent Beacons



219 LED Permanent Beacon





Base with integrated tube (accessory)

- Safe CAGE CLAMP® technology
- Optimum illumination
- Tube mounting
- Single hole mounting possible with cable gland

TECHNICAL SPECIFICATIONS:

Life duration up to 100,000 hrs

Dimensions (Ø x Height):	58 mm x 119 mm
Housing:	PA-GF, high impact
Lens:	PC, transparent Ring: PC
Connection:	CAGE CLAMP® technology max. 2.5 mm² Contact protection according to VDE
Cable entry:	Cable diameter max. 11 mm
Fixing:	Tube mounting, M 25 x 1.5 mm

ORDER SPECIFICATIONS:

Voltage	24 V≂	115 V~	230 V~
Current consumption	45 mA	25 mA	25 mA
red	**219 110 75**	**219 110 67**	**219 110 68**
green	**219 210 75**	**219 210 67**	**219 210 68**
yellow	**219 310 75**	**219 310 67**	**219 310 68**

ACCESSORIES:

Base with integrated tube, M 25 x 1.5 mm	**975 209 01**
Cable gland M 25 x 1.5 mm	**975 209 02**

TECHNICAL DIAGRAMS:

see page 270

Sizes of Permanent Beacons



24 V

PLC

850/851/852 Permanent Beacon



850



851



852

- **Available with grey or black housing**

TECHNICAL SPECIFICATIONS:

Dimensions (Ø x Height):	57 mm x 88 mm (850) 57 mm x 108 mm (851) 57 mm x 101 mm (852)
Housing:	ABS (85X XXX 38) PC/ABS-Blend (85X XXX 08)
Lens:	PC, transparent
Fixing:	850: Base mounting 851: Bracket mounting 852: Tube mounting M 25 x 1.5 mm
Socket:	B15d max. 7 Watt
Connection:	Screw terminal max. 1.5 mm² Contact protection according to VDE
Cable entry:	Cable diameter max. 8.5 mm (850) Cable diameter max. 7-10 mm (851) Cable diameter max. 10 mm (852)

Bulb not included in assembly.

ORDER SPECIFICATIONS:

Base mounting 850		12 - 250 V			12 - 250 V
Black housing	red	**850 100 08**	Grey housing	red	**850 100 38**
	green	**850 200 08**		green	**850 200 38**
	yellow	**850 300 08**		yellow	**850 300 38**
	clear	**850 400 08**		clear	**850 400 38**
Bracket mounting 851		12 - 250 V			12 - 250 V
Black housing	red	**851 100 08**	Grey housing	red	**851 100 38**
	green	**851 200 08**		green	**851 200 38**
	yellow	**851 300 08**		yellow	**851 300 38**
	clear	**851 400 08**		clear	**851 400 38**
Tube mounting 852		12 - 250 V			12 - 250 V
Black housing	red	**852 100 08**	Grey housing	red	**852 100 38**
	yellow	**852 300 08**		yellow	**852 300 38**

Further colours and voltages on request.

ADDITIONAL INFORMATION:

Please also see the beacon series 209, 210, 213, 219 with additional advantages (see page 108 onwards)

- High protection rating IP 65
- B15d socket integrated in the base
- Safe CAGE CLAMP® connection
- Optimum illumination
- Connection without product disassembly











ACCESSORIES:

Base with integrated tube with M 25 x 1.5 mm incl. rubber seal	**960 693 03**
Adaptor M 25 / M 20 for fixing	**960 693 04**
Cable gland M 25 x 1.5 mm	**975 209 02**

Bulb BA15d, 7 W
Total length max. 52 mm

Voltage	12 V	24 V	48 V	115 V	230 V
	955 015 34	**955 015 35**	**955 015 36**	**955 015 37**	**955 015 38**

LED bulb BA15d
Total length max. 42 mm

Voltage	24 V≂	115 V~	230 V~
Current consumption	< 45 mA	< 15 mA	< 15 mA
red	**956 100 75**	**956 100 67**	**956 100 68**
green	**956 200 75**	**956 200 67**	**956 200 68**
yellow	**956 300 75**	**956 300 67**	**956 300 68**
white	**956 400 75**	**956 400 67**	**956 400 68**
blue	**956 500 75**	**956 500 67**	**956 500 68**

Seal for 850 (required for IP 54)	**975 850 01**

TECHNICAL DIAGRAMS:

see page 287

220/223 Permanent Beacon



Permanent Beacon 220
(Base mounting)



Permanent Beacon 223 with
integrated mounting bracket



Housing with
CAGE CLAMP®-Connection

- Safe CAGE CLAMP® technology
- B15d socket integrated in the base
- Optimum illumination
- Available for base or bracket mounting
- Connection without the need to disassemble the product

TECHNICAL SPECIFICATIONS:

Housing:	PA-GF, high impact
Lens:	PC, transparent; Ring: PC/ABS-Blend
Connection:	CAGE CLAMP® technology max. 2.5 mm² Contact protection according to VDE
Cable entry:	Cable diameter max. 10 mm (220) Cable diameter 3-6 mm (223)

PERMANENT BEACON	**220**	**223**
Fixing:	Base mounting with flat seal	Bracket mounting cable gland M 12 x 1.5 mm
Dimensions (Ø x Height):	75 mm x 79 mm	75 mm x 105 mm
Operating voltage:	Max. 250 V	Max. 250 V
Bulb socket:	B15d, 10 Watt max.	B15d,10 Watt max.
Bulb change:	Via removal of lens	Via removal of lens

Bulb not included in assembly.

ORDER SPECIFICATIONS:

	Base mounting 220	**Bracket mounting 223**
Voltage	12-240 V	12-240 V
red	**220 100 00**	**223 100 00**
green	**220 200 00**	**223 200 00**
yellow	**220 300 00**	**223 300 00**
clear	**220 400 00**	**223 400 00**
blue	**220 500 00**	**223 500 00**

Further colours and voltages on request.

ACCESSORIES:

Bulb BA15d, 7 W
total length max. 52 mm

Voltage	12 V	24 V	48 V	115 V	230 V
	955 015 34	**955 015 35**	**955 015 36**	**955 015 37**	**955 015 38**

LED bulb BA15d
total length max. 42 mm

Voltage	24 V≂	115 V~	230 V~
Current consumption	< 45 mA	< 15 mA	< 15 mA
red	**956 100 75**	**956 100 67**	**956 100 68**
green	**956 200 75**	**956 200 67**	**956 200 68**
yellow	**956 300 75**	**956 300 67**	**956 300 68**
white	**956 400 75**	**956 400 67**	**956 400 68**
blue	**956 500 75**	**956 500 67**	**956 500 68**

TECHNICAL DIAGRAMS: see page 270

Sizes of Permanent Beacons

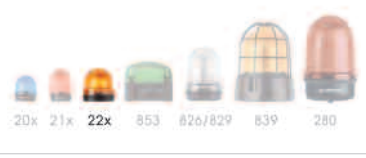

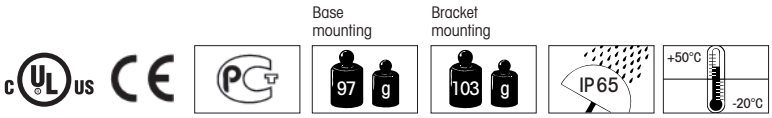

WERMA SIGNALTECHNIK

221/224 LED Permanent Beacon



LED Permanent Beacon 221
(Base mounting)



LED Permanent Beacon 224 with integrated mounting bracket

- Safe CAGE CLAMP® technology
- Optimum illumination
- Available for base or bracket mounting
- Connection without the need to disassemble the product

TECHNICAL SPECIFICATIONS:

Life duration up to 100,000 hrs

Housing:	PA-GF, high impact
Lens:	PC, transparent; Ring: PC/ABS-Blend
Connection:	CAGE CLAMP® technology max. 2.5 mm² Contact protection according to VDE
Cable entry:	Cable diameter max. 10 mm (221) Cable diameter 3-6 mm (224)

LED PERMANENT BEACON	**221**	**224**
Fixing:	Base mounting with flat seal	Bracket mounting cable gland M 12 x 1.5 mm
Dimensions (Ø x Height):	75 mm x 79 mm	75 mm x 105 mm

ORDER SPECIFICATIONS:

Base mounting 221			
Voltage	24 V≂	115 V~	230 V~
Current consumption	45 mA	25 mA	25 mA
red	**221 100 75**	**221 100 67**	**221 100 68**
green	**221 200 75**	**221 200 67**	**221 200 68**
yellow	**221 300 75**	**221 300 67**	**221 300 68**
Bracket mounting 224			
Voltage	24 V≂	115 V~	230 V~
Current consumption	45 mA	25 mA	25 mA
red	**224 100 75**	**224 100 67**	**224 100 68**
green	**224 200 75**	**224 200 67**	**224 200 68**
yellow	**224 300 75**	**224 300 67**	**224 300 68**

Further colours and voltages on request.

TECHNICAL DIAGRAMS:

see page 270

Sizes of Permanent Beacons

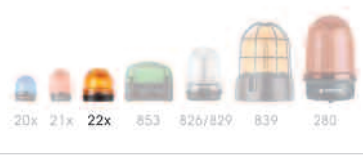

Base mounting 108 g
Bracket mounting 114 g
IP65
+50°C
-20°C
24 V
PLC

806 Monitorable LED Permanent Beacon

TÜV Rheinland Gruppe — Bauart geprüft — Type approved



- TÜV certified LED Muting Beacon
- Current monitoring possible
- Life duration up to 100,000 hrs
- Approved for muting use according to IEC 61496-1
- For use in laser technology according to EN 60825-1, restart warning, timed triggering, change of operating mode

TECHNICAL SPECIFICATIONS:

Life duration up to 100,000 hrs

Dimensions (Ø x Height):	70 mm x 97 mm
Housing:	Terminal element: PA-GF, high impact Cap: PC
Lens:	PC, transparent
Fixing:	Base mounting, Bracket mounting
Connection:	CAGE CLAMP® technology max. 2.5 mm² Contact protection according to VDE
Cable entry:	Cable diameter max. 14 mm
Duty cycle:	100 %
Current consumption following failure of 3 of the 6 strips:	< 5 mA



Bracket (accessory)





Accessories

ORDER SPECIFICATIONS:

Voltage	24 V ⎓
Current consumption	60 mA
yellow	**806 350 55**
clear	**806 450 55**

ACCESSORIES:

Bracket, including cable gland	**960 000 02**
Bracket for 1-sided mounting	**975 840 85**

see page 41.

ADDITIONAL INFORMATION:

What does Muting mean?

Muting is the temporary automatic overriding of a safety protection device by means of a control system within the normal operating cycle of a machine. This bridging of the safety protection must be visually displayed in order to prevent workers mistakenly entering a dangerous area.

It is therefore necessary that the signal beacon in such applications can be triggered by failsafe technology and the bulb function can be monitored.
The standard colour for muting signalisation is clear; yellow is however also permitted.

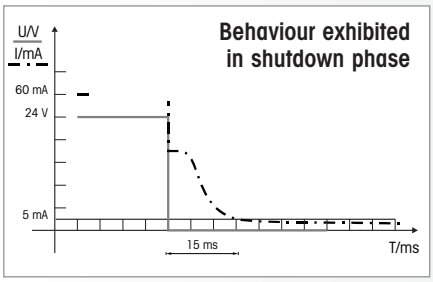

Behaviour exhibited in shutdown phase

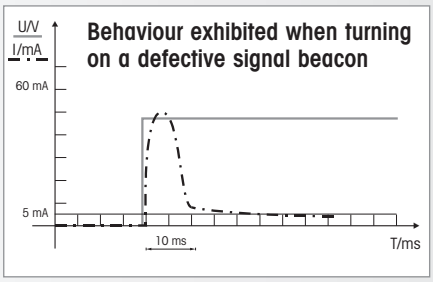

Behaviour exhibited when turning on a defective signal beacon

TECHNICAL DIAGRAMS:

see page 282

WERMA SIGNALTECHNIK

853 LED Permanent Beacon



- LED Permanent Beacon in attractive quadratic form
- Innovative connector to create traffic light combinations
- Easy assembly due to quick-release screws
- Thread/membrane combination keeps cabling requirements to a minimum

Life duration up to 50,000 hrs

TECHNICAL SPECIFICATIONS:

Dimensions (L x H x W):	85 mm x 85 mm x 72 mm
Housing:	PP-GF, black
Lens:	PC, transparent
Connection:	Screw terminal with wire protection, max. 1.5 mm²
Fixing:	Wall, base and ceiling mounting
Current consumption:	Max. 80 mA at 24 V
Equipment:	Eight self-sealing membranes for cable entry without tools Eight integrated M 20 threads, no nuts required Optional use of a cable gland, thread length of cable gland ≤ 9 mm (accessory)
Assembly:	Incl. snap-on fixing bracket (optional use, see page 136)



The innovative connector (accessory) enables traffic light combinations to be created in a matter of seconds

ORDER SPECIFICATIONS:

Voltage	12 V ⎓	24 V ⎓	115-230 V ~
red	**853 100 54**	**853 100 55**	**853 100 60**
green	**853 200 54**	**853 200 55**	**853 200 60**
yellow	**853 300 54**	**853 300 55**	**853 300 60**
clear	**853 400 54**	**853 400 55**	**853 400 60**
blue	**853 500 54**	**853 500 55**	**853 500 60**

ACCESSORIES:

Connector for traffic light combinations	**975 853 01**
Cable gland M 20 x 1.5 mm 8 mm thread length, required for protection rating IP 67.	**975 853 02**

ADDITIONAL INFORMATION:

Combinations made easy

The LED Beacon 853 can be easily turned into a traffic light combination. Simply attach different coloured beacons together using the connector.

The eight cable entries with both self-sealing membranes and integrated M 20 threads enable additional beacons to be attached to every side. There is no limit to the range of possible lighting designs that can be created.

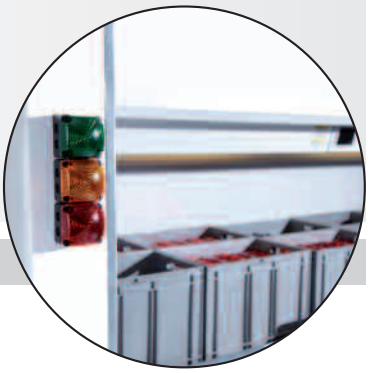

TECHNICAL DIAGRAMS:

see page 287

Sizes of Permanent Beacons



With cable gland

135 g | IP66 | IP67 | +50°C -25°C | 24 V PLC

826 Permanent Beacon



Base/Bracket Mounting



Tube Mounting



Accessories

- **Tube mounting solution suitable for Ø 25 mm and 1/2" NPT tubes**
- **Simple mounting**
- **Removal of the lens only possible with tools**

TECHNICAL SPECIFICATIONS:

Dimensions (Ø x Height):	98 mm x 137 mm (Base/Bracket mounting) 98 mm x 200 mm (Tube mounting)
Cable entry:	Cable diameter 5-7 mm
Housing:	PC/ABS-Blend
Lens:	PC, transparent
Connection:	Screw free clamp mechanism max. 1.5 mm² Contact protection according to VDE
Operating voltage:	Max. 250 V for B15d
Bulb:	Max. 15 W
Duty cycle:	100 % max. 15 W, 50 % max. 25 W
Socket:	B15d

Bulb not included in assembly.

ORDER SPECIFICATIONS:

Fixing	**Base/Bracket mounting**	**Tube mounting**
Voltage	12 – 240 V	12 – 240 V
red	**826 100 00**	**826 110 00**
green	**826 200 00**	**826 210 00**
yellow	**826 300 00**	**826 310 00**
clear	**826 400 00**	**826 410 00**
blue	**826 500 00**	**826 510 00**

ACCESSORIES:

Plastic bracket for wall mounting		**975 826 05**
Wire guard, galvanised, only for base mounting		**975 826 03**
Tube Ø 25 mm, all anodized aluminium, 100 mm long		**975 845 10**
Base for tube, plastic		**975 840 90**
Base for tube, metal		**975 840 91**
Bulb BA15d, 15 W, total length max. 45 mm	24 V **955 826 35**	230 V **955 826 38**

TECHNICAL DIAGRAMS:

see page 283

Sizes of Permanent Beacons



Base/Bracket mounting

Base/Bracket mounting

Tube mounting

WERMA SIGNALTECHNIK

Monitored Permanent Beacon





Bracket (accessory)



Tube with base (accessory)

- **Built-in monitoring capability**
- **TÜV approval**
- **No additional external voltage required**
- **Two potential-free safety outputs for connection to control system**

TECHNICAL SPECIFICATIONS:

Dimensions (Ø x Height):	98 mm x 137 mm
Housing:	PC/ABS-Blend
Lens:	PC, transparent
Fixing:	Base, bracket and tube mounting Base 975 840 90 must be ordered twice for base mounting – once as socket for beacon and once as base
Connection:	Screw terminal with wire protection max. 2.5 mm^2
Cable entry:	Cable diameter 5-7 mm
Rated voltage:	24 V ⎓ ± 10 %
Input power 24 V ⎓ :	7 W
Bulb BA15d:	7 W / 24 V
Output current capability:	30 V ⎓ / 100 mA
On state resistance of an output:	Max. 25 Ω
Fuse for 7 W bulb:	500 mA quick action (IEC 60127-3/3)
Atmospheric humidity:	≤ 95 % without moisture condensation
Response time,	
normal operation and with filament break:	1 ms to 5 ms
in fault cases with safety release:	< 300 ms (with short-circuit current ≥ 4 A)
Certification:	EN ISO 13849-1:2008 category 4 , Peformance Level „e" EN ISO 13849-2:2008 validation

Bulb included in assembly.

ORDER SPECIFICATIONS:

Voltage	24 V ⎓
red	**826 110 55**
yellow	**826 310 55**
clear	**826 410 55**

ACCESSORIES:

Bulb BA15d, 7 W	**955 015 35**

ADDITIONAL INFORMATION:

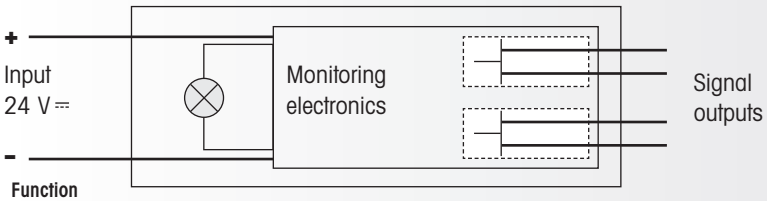

Function

The device is equipped with a lamp monitor which signals the current flow of the incandescent lamp back to two electrically isolated, potential-free semiconductor outputs A and B (outputs closed). If the lamp has not been actuated, both outputs are open. In case of a fault and/or a lamp failure at least one output is opened.

Depending on the safety category, one or two outputs are to be used for a reliable lamp evaluation. In case of an incandescent filament short-circuit in the lamp, the integrated fuse is tripped. It must be replaced by a new fuse in accordance with the specifications after the lamp has been replaced by a lamp of equal wattage.

TECHNICAL DIAGRAMS:

see page 283

Sizes of Permanent Beacons



829 LED Permanent/Blinking Beacon



Base/Bracket mounting



Tube mounting



Accessories

- Multi-functional LED beacon
- Interchangeable light effects
- Shock-proof and vibration resistant
- Tube mounting solution suitable for Ø 25 mm and 1/2" NPT tubes
- Life duration up to 50,000 hrs

TECHNICAL SPECIFICATIONS:

Dimensions (Ø x Height):	98 mm x 137 mm (Base/Bracket mounting) 98 mm x 200 mm (Tube mounting)
Cable entry:	Cable diameter 5-7 mm
Housing:	PC/ABS-Blend
Lens:	PC, transparent
Connection:	Screw terminal with wire protection 0.5 mm² - 2.5 mm²

Life duration up to 50,000 hrs

LED PERMANENT/BLINKING BEACON (INTERCHANGEABLE LIGHT EFFECT)	
Blink frequency:	c. 1.5 Hz
Operating voltage:	24 V ⎓
Current consumption:	≤ 150 mA

LED PERMANENT BEACON		
Operating voltage:	115 V ~	230 V ~
Current consumption:	≤ 30 mA	≤ 30 mA

ORDER SPECIFICATIONS:

LED PERMANENT/BLINKING	Base/Bracket mounting	Tube mounting
Voltage	24 V ⎓	24 V ⎓
red	**829 100 55**	**829 107 55**
green	**829 200 55**	**829 207 55**
yellow	**829 300 55**	**829 307 55**
blue	**829 500 55**	**829 507 55**

LED PERMANENT	Base/Bracket mounting		Tube mounting	
Voltage	115 V ~	230 V ~	115 V ~	230 V ~
red	**829 130 67**	**829 130 68**	**829 137 67**	**829 137 68**
green	**829 230 67**	**829 230 68**	**829 237 67**	**829 237 68**
yellow	**829 330 67**	**829 330 68**	**829 337 67**	**829 337 68**
blue	**829 530 67**	**829 530 68**	**829 537 67**	**829 537 68**

ACCESSORIES:

Plastic bracket for wall mounting	**975 826 05**
Wire guard, galvanised, only for base mounting	**975 826 03**
Tube Ø 25 mm, all anodized aluminium, 100 mm long	**975 845 10**
Base for tube, plastic	**975 840 90**
Base for tube, metal	**975 840 91**

TECHNICAL DIAGRAMS:

see page 283

Sizes of Permanent Beacons

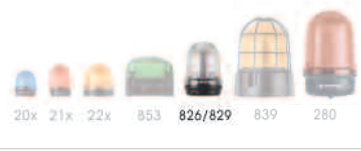

Base/Bracket mounting

Base/Bracket mounting

Tube mounting

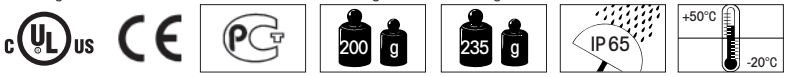

WERMA SIGNALTECHNIK

829

LED Permanent/Blinking/Rotating Beacon with external triggering



Base/Bracket mounting



Bracket (accessories)



Three different light effects with one device

Sizes of Permanent Beacons



- Multi-functional LED beacon
- 3 light effects can be remotely selected
- Electrically isolated signal inputs
- Positive and negative logic possible
- Tube mounting solution suitable for Ø 25 mm and 1/2" NPT tubes

TECHNICAL SPECIFICATIONS:

Dimensions (Ø x Height):	98 mm x 137 mm (Base/Bracket mounting) 98 mm x 200 mm (Tube mounting)
Cable entry:	Cable diameter 5-7 mm
Housing:	PC/ABS-Blend
Lens:	PC, transparent
Connection:	Screw terminal with wire protection 0.5 mm^2 - 2.5 mm^2
Blink frequency:	c. 1.5 Hz
Rotation frequency:	c. 180 r.p.m.

Life duration up to 50,000 hrs

ORDER SPECIFICATIONS:

Fixing	Base/Bracket mounting	Tube mounting
Voltage	24 V ⎓	24 V ⎓
Current consumption	≤ 300 mA	≤ 300 mA
red	**829 150 55**	**829 157 55**
green	**829 250 55**	**829 257 55**
yellow	**829 350 55**	**829 357 55**
blue	**829 550 55**	**829 557 55**

ACCESSORIES:

Plastic bracket for wall mounting	**975 826 05**
Wire guard, galvanised, only for base mounting	**975 826 03**
Tube Ø 25 mm, all anodized aluminium, 100 mm long	**975 845 10**
Base for tube, plastic	**975 840 90**
Base for tube, metal	**975 840 91**

ADDITIONAL INFORMATION:

829 with external triggering – Light effects set via control cables

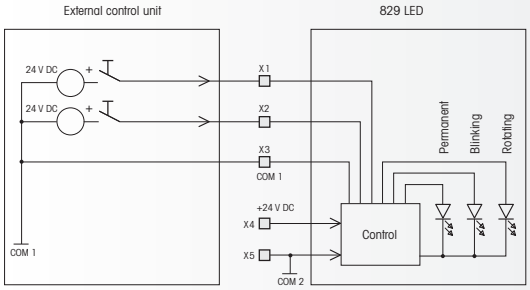

Thanks to the external trigger function, the range of light effects offered by the LED Beacon 829 can be set by means of electrically isolated, binary coded 24 V control cables. This guarantees a much greater level of resistance to electrical interference.
The machine operator can use the different signals to indicate various machine conditions – without having to make adjustments to the beacon itself. In addition the LED beacon 829 can be used in conjunction with both positive and negative trigger logic.

TECHNICAL DIAGRAMS:

see page 283

Base/Bracket mounting

Base/Bracket mounting 220 g

Tube mounting 255 g

IP65

+50°C

-20°C

829 Monitored LED Permanent Beacon

- Durable LED Permanent Beacon with built-in monitoring capability
- Life duration up to 50,000 hrs
- No additional external voltage required
- Two potential-free safety outputs for connection to control system





Monitored Permanent Beacon with long life, maintenance-free LED technology



Bracket (accessory)

TECHNICAL SPECIFICATIONS:

Life duration up to 50,000 hrs

Dimensions (Diameter x Height):	98 mm x 137 mm
Housing:	PC/ABS-Blend
Lens:	PC, transparent
Fixing:	Base, bracket and tube mounting Base 975 840 90 must be ordered twice for base mounting – once as socket for beacon and once as base
Installation position:	Vertical
Cable outlet:	Downward
Current consumption:	≤ 145 mA
Duty cycle:	100 %
Connection:	Screw terminal with wire protection max. 2.5 mm²
Cable entry:	Cable diameter 5-7 mm
Rated voltage:	24 V ⎓
Input power 24 V ⎓ :	c. 3.5 W
Output current capability:	30 V ⎓ / 100 mA
On state resistance of an output:	Max. 25 Ω
Atmospheric humidity:	≤ 95 % without moisture condensation
Response time, normal operation and with LED failure:	1 ms to 5 ms
in fault cases with safety release:	< 1 s (with short-circuit current ≥ 1 A)
Certification:	EN ISO 13849-1:2008 category 4 , Peformance Level "e" EN ISO 13849-2:2008 validation

ORDER SPECIFICATIONS:

Voltage	24 V ⎓
red	**829 170 55**
yellow	**829 370 55**
clear	**829 470 55**

ACCESSORIES:

Bracket	**975 826 05**

ADDITIONAL INFORMATION:

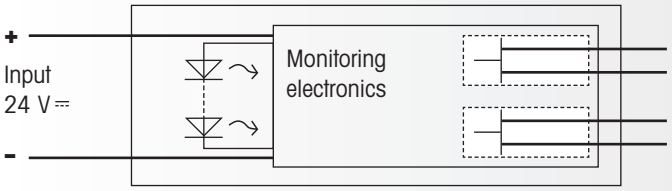

Function

The device is equipped with monitoring electronics which signal the current flow of the beacon back to two electrically isolated, potential-free semiconductor outputs A and B (outputs closed).

If the beacon has not been actuated, both outputs are open. In case of a fault at least one output is opened.

TECHNICAL DIAGRAMS:

see page 283

Sizes of Permanent Beacons

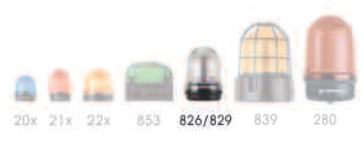

WERMA SIGNALTECHNIK

895 Permanent Beacon





- **Large signal beacons for powerful signal effectiveness**
- **With a multitude of symbols**
- **High light intensity thanks to optimised lens**

TECHNICAL SPECIFICATIONS:

Dimensions (Ø x Height):	150 mm x 148 mm
Housing:	PC/ABS-Blend, grey
Lens:	PC, transparent
Socket:	E27 max. 25 W 2 sockets E14 each with max. 15 W with adhesive stickers E27 max. 15 W
Fixing:	Base mounting
Cable entry:	From top or bottom with cable gland M 20 x 1.5 mm or from the back with rubber grommet Ø 6-12 mm
Connection:	Screw-free clamp mechanism max. 1.5 mm²

ORDER SPECIFICATIONS:

Voltage	12 –240 V≂
red	**895 100 00**
green	**895 200 00**
yellow	**895 300 00**
clear	**895 400 00**
blue	**895 500 00**
Bulb not included in assembly.	

PERMANENT LIGHT WITH TWO SOCKETS (incl. reflector)

Voltage	12 – 240 V≂
red	**895 110 00**

ACCESSORIES:

Fixing bracket, additional reflector, Bulbs and LED Bulbs, Adhesive Stickers see Permanent/ Traffic Light Beacon (page 161).

TECHNICAL DIAGRAMS:

see page 291

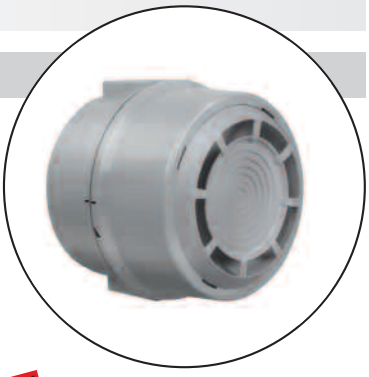

NEW

Audible addition: The Multi-Tone Sounder 190 with 110 dB (see page 228)

839 LED Permanent Beacon



- Robust aluminium housing including wire guard
- Salt water resistant
- DC multi-voltage version
- Life duration up to 50,000 hrs
- NEW • High Protection rating IP 67

TECHNICAL SPECIFICATIONS:

Life duration up to 50,000 hrs

Dimensions (Ø x Height):	153 mm x 189 mm
Housing:	Black laquered aluminium with integral wire guard
Lens:	PC, transparent
Fixing:	Base mounting
Connection:	Screw terminal with wire protection max. 2.5 mm²
Cable entry:	Cable gland M 20 x 1.5 mm (included in assembly) Cable diameter 6-13 mm
Installation position:	As required



ORDER SPECIFICATIONS:

Voltage	12-50 V ⎓	230 V ~
Current consumption	500 - 100 mA	50 mA
red	**839 100 55**	**839 100 68**
yellow	**839 300 55**	**839 300 68**

TECHNICAL DIAGRAMS:

see page 284



NEW **Also suitable for use in rough conditions**

Sizes of Permanent Beacons





WERMA SIGNALTECHNIK

280 LED Permanent Beacon



- Extremely high light intesity
- Life duration up to 50,000 hrs
- NEW • Adaptor for tube mounting (accessory)
- High impact resistance to 20 Joules
- DC multi-voltage version

TECHNICAL SPECIFICATIONS:

Life duration up to 50,000 hrs

Dimensions (Ø x Height):	142 mm x 218 mm
Housing:	PC/ABS-Blend
Lens:	PC, transparent
Fixing:	Base mounting, bracket mounting (accessory), tube mounting (accessory)
Connection:	Screw terminal with wire protection max. 2.5 mm²
	Contact protection according to VDE
Cable entry:	Cable diameter 5-7 mm
Duty cycle:	100 %



Plastic bracket (accessory)

ORDER SPECIFICATIONS:

Voltage	12-50 V ⎓	230 V ~
Current consumption	12 V: 500 mA 50 V: 100 mA	50 mA
red	**280 100 55**	**280 100 68**
yellow	**280 300 55**	**280 300 68**

ACCESSORIES:

Plastic bracket for wall mounting	**975 883 06**
NEW Adaptor for tube mounting	**975 883 09**
Wire guard, only for base mounting	**975 883 08**

TECHNICAL DIAGRAMS:

see page 271



Plastic bracket, adaptor for tube mounting and wire guard (accessories)



Extremely high light output using unique LED technology

Sizes of Permanent Beacons



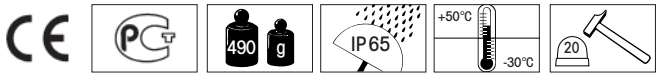

Obstruction Light



Why do obstacles need to be illuminated?

The law stipulates that buildings of a specific height and in the vicinity of airports as well as factory chimneys, towers, masts etc. must be equipped with obstruction lights.

This special lighting makes obstacles visible for pilots in the dark or when visibility is poor. Obstruction lighting is one of the most important aspects of flight safety.



What directives and regulations are there?

The method of marking obstacles to air traffic is laid down by diverse laws, regulations and recommendations. These regulations have a clearly defined sphere of influence and are **internationally interlinked.**

The International Civil Aviation Organisation **(ICAO)** is a special organisation within the United Nations created to establish and develop universal regulations for safety, continuity and economic efficiency in international air traffic. The recommendations of the ICAO are not directly binding in the member states, but must be transformed by them into the appropriate **national legal regulations.**

In **Germany** the Ministry for Transport and Construction Development **(BMVBS)** issues the regulations covering obstruction lighting on buildings. The **ICAO** regulations regarding the methods of marking and lighting aviation obstacles can be found in ICAO Annex 14.





Where are obstacle lights deployed?

- **Germany:** Marking of aviation obstacles by night at any height providing the highest point of the obstacle can be marked.
- **According to ICAO:** Marking of aviation obstacles by night up to 45 m ("Low-intensity Obstacle Light, Type A").

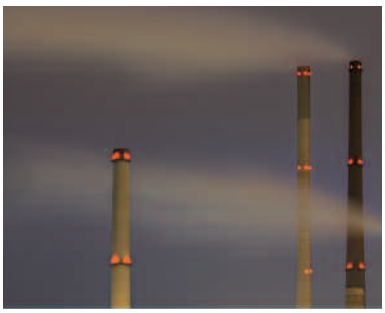

280 LED Obstruction Light



- LED obstruction light certified in accordance with German BMVBS regulations
- For use as "Low-intensity Obstruction Light, Type A" in accordance with ICAO Annex 14
- Lightweight solution ensures easy installation
- High impact resistance to 20 Joules
- DC multi-voltage version

TECHNICAL SPECIFICATIONS:

Life duration up to 50,000 hrs

Dimensions (Ø x Height):	142 mm x 218 mm
Housing:	PC/ABS-Blend
Lens:	PC, transparent, clear
Fixing:	Base mounting, bracket mounting (accessory), tube mounting (accessory)
Connection:	Screw terminal with wire protection max. 2.5 mm² Contact protection according to VDE
Cable entry:	Cable diameter 5-7 mm
Duty cycle:	100 %

ORDER SPECIFICATIONS:

Voltage	12-50 V ⎓	230 V ~
Current consumption	500-100 mA	50 mA
aviation red	**280 410 55**	**280 410 68**

ACCESSORIES:

Plastic bracket for wall mounting	**975 883 06**
NEW Adaptor for tube mounting	**975 883 09**
Wire guard, only for base mounting	**975 883 08**



NEW The new adaptor (accessory) allows quick and simple mounting on a tube



Plastic bracket, adaptor for tube mounting and wire guard (accessories)

ADDITIONAL INFORMATION:

What benefits do you have?

1. Greater safety
- The high light intensity ensures obstacles are clearly marked.
- Thanks to a life duration of up to 50,000 hours, the risk of a beacon failure is minimal.

2. Reduction in maintenance costs
- The LED technology guarantees a life duration of up to 50,000 hours. As a result, the LED Obstruction Light from WERMA is maintenance-free – and will require no attention for almost 6 years.
- No need to change light bulbs.
- Thanks to the LED technology, a reserve beacon and monitoring of the light is, as a rule, no longer necessary.



Extremely high light output using unique LED technology

TECHNICAL DIAGRAMS:

see page 259

Sizes of Permanent Beacons





281 LED Obstruction Light





Long-life and maintainance-free LED technology

- **LED Obstruction Light with robust glass/metal housing**
- **Suitable for use in rough conditions, salt water resistant**
- **DC multi-voltage version (12-50 V)**
- **LED Obstruction Light certified in accordance with German BMVBS regulations**
- **For international use as „Low-intensity Obstacle Light, Type A" in accordance with ICAO Annex 14**

TECHNICAL SPECIFICATIONS:

Life duration up to 50,000 hrs

Dimensions (Ø x Height):	185 mm x 205 mm
Housing:	Aluminium, coloured powder coating
Lens:	Reinforced borosilicate glass
Fixing:	Base mounting, tube mounting M 25 (no accessory required)
Connection:	Screw terminal with wire protection max. 2.5 mm² Contact protection according to VDE
Cable entry:	Cable gland M 25 x 1.5 mm (included in assembly), Cable diameter 9-17 mm

Available: 1st quarter 2011

ORDER SPECIFICATIONS:

Voltage	12-50 V ⎓	230 V ~
Current consumption	500-100 mA	50 mA
Aviation red	**281 410 55**	**281 410 68**

ADDITIONAL INFORMATION:

Salt water and fuel resistant
The new WERMA obstruction light is especially robust. It provides reliable signalling for all air traffic hazards – even in extreme conditions.

To protect the obstruction light against sea salt, UV radiation or aviation fuel, WERMA has selected a particularly robust material - the aluminium die-cast housing is made of a high-quality salt water resistant alloy which is covered with a powder coating.

The glass lens is made of hardened borosilicate glass. This ensures that the signalling device does not weather even in the toughest conditions.

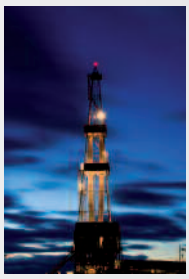

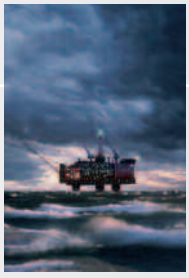

Once installed, the signalling device lasts many years
Thanks to the LED technology, WERMA's obstruction light is maintenance-free. With a life duration of up to 50,000 hours the LEDs last up to 50 times longer than conventional light bulbs. This fact embodies one of the biggest advantages of LED obstruction lights, as it does away with the cumbersome job of replacing light bulbs at great heights.

TECHNICAL DIAGRAMS:

see page 271



WERMA SIGNALTECHNIK

202/205 Flashing Beacon



Flashing Beacon 202
(Base mounting)



Flashing Beacon 205 with
integrated mounting bracket



Housing with
CAGE CLAMP®-Connection

- Safe CAGE CLAMP® technology
- Optimum illumination
- Available for base or bracket mounting
- Connection without the need to disassemble the product

TECHNICAL SPECIFICATIONS:

Housing:	PA-GF, high impact
Lens:	PC, transparent; Ring: PC
Connection:	CAGE CLAMP® technology max. 2.5 mm²
	Contact protection according to VDE
Cable entry:	Cable diameter max. 10 mm (202)
	Cable diameter 3-6 mm (205)

FLASHING BEACON	**202**	**205**
Fixing:	Base mounting with flat seal	Bracket mounting cable gland M 12 x 1.5 mm
Dimensions (Ø x Height):	58 mm x 81 mm	58 mm x 107 mm
Flash frequency:	c. 0.75 Hz	c. 0.75 Hz
Flash energy:	1 Ws	1 Ws
Life duration:	4 x 10^6 flashes	4 x 10^6 flashes

ORDER SPECIFICATIONS:

Base mounting 202			
Voltage	24 V ⎓	115 V ~	230 V ~
Current consumption	100 mA	20 mA	30 mA
red	**202 100 55**	**202 100 67**	**202 100 68**
yellow	**202 300 55**	**202 300 67**	**202 300 68**

Bracket mounting 205			
Voltage	24 V ⎓	115 V ~	230 V ~
Current consumption	100 mA	20 mA	30 mA
red	**205 100 55**	**205 100 67**	**205 100 68**
yellow	**205 300 55**	**205 300 67**	**205 300 68**

Further colours and voltages on request.

TECHNICAL DIAGRAMS:

see page 269

Sizes of Flashing Beacons



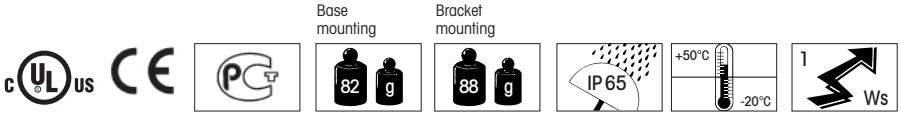

209 Flashing Beacon





Base with integrated tube (accessory)

- **Safe CAGE CLAMP® technology**
- **Optimum illumination**
- **Tube mounting**
- **Single hole mounting possible with cable gland**

TECHNICAL SPECIFICATIONS:

Dimensions (Ø x Height):	58 mm x 103 mm
Housing:	PA-GF, high impact
Lens:	PC, transparent Ring: PC
Connection:	CAGE CLAMP® technology max. 2.5 mm^2 Contact protection according to VDE
Cable entry:	Cable diameter max. 11 mm
Fixing:	Tube mounting M 25 x 1.5 mm
Flash frequency:	c. 0.75 Hz
Flash energy:	1 Ws
Life duration:	4 x 10^6 flashes

ORDER SPECIFICATIONS:

Voltage	24 V ⎓	115 V ~	230 V ~
Current consumption	100 mA	20 mA	30 mA
red	**209 120 55**	**209 120 67**	**209 120 68**
yellow	**209 320 55**	**209 320 67**	**209 320 68**

ACCESSORIES:

Base with integrated tube, M 25 x 1.5 mm	**975 209 01**
Cable gland M 25 x 1.5 mm	**975 209 02**

TECHNICAL DIAGRAMS:

see page 269

Sizes of Flashing Beacons



c UL us CE PG 94 g IP65 +50°C -20°C 1 Ws

WERMA SIGNALTECHNIK

212/215 Flashing Beacon



Flashing Beacon 212
(Base mounting)



Flashing Beacon 215 with integrated mounting bracket

- Safe CAGE CLAMP® technology
- Optimum illumination
- Available for base or bracket mounting
- Connection without the need to disassemble the product

TECHNICAL SPECIFICATIONS:

Housing:	PA-GF, high impact
Lens:	PC, transparent; Ring: PC
Connection:	CAGE CLAMP® technology max. 2.5 mm²
	Contact protection according to VDE
Cable entry:	Cable diameter max. 10 mm (212)
	Cable diameter 3-6 mm (215)

FLASHING BEACON	**212**	**215**
Fixing:	Base mounting with flat seal	Bracket mounting cable gland M 12 x 1.5 mm
Dimensions (Ø x Height):	58 mm x 97 mm	58 mm x 123 mm
Flash frequency:	c. 0.75 Hz	c. 0.75 Hz
Flash energy:	1 Ws	1 Ws
Life duration:	4 x 10^6 flashes	4 x 10^6 flashes

ORDER SPECIFICATIONS:

Base mounting 212			
Voltage	24 V ⎓	115 V ~	230 V ~
Current consumption	100 mA	20 mA	30 mA
red	**212 100 55**	**212 100 67**	**212 100 68**
yellow	**212 300 55**	**212 300 67**	**212 300 68**

Bracket mounting 215			
Voltage	24 V ⎓	115 V ~	230 V ~
Current consumption	100 mA	20 mA	30 mA
red	**215 100 55**	**215 100 67**	**215 100 68**
yellow	**215 300 55**	**215 300 67**	**215 300 68**

Further colours and voltages on request.

TECHNICAL DIAGRAMS:

see page 270

Sizes of Flashing Beacons

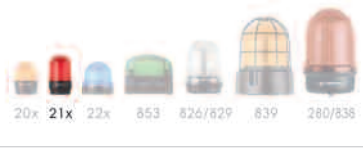

Base mounting

Bracket mounting

219 Flashing Beacon





Base with tube (accessory)



- Safe CAGE CLAMP® technology
- Optimum illumination
- Tube mounting
- Single hole mounting possible with cable gland

TECHNICAL SPECIFICATIONS:

Dimensions (Ø x Height):	58 mm x 119 mm
Housing:	PA-GF, high impact
Lens:	PC, transparent Ring: PC
Connection:	CAGE CLAMP® technology max. 2.5 mm^2 Contact protection according to VDE
Cable entry:	Cable diameter max. 11 mm
Fixing:	Tube mounting M 25 x 1.5 mm
Flash frequency:	c. 0.75 Hz
Flash energy:	1 Ws
Life duration:	4 x 10^6 flashes

ORDER SPECIFICATIONS:

Voltage	24 V ⎓	115 V ~	230 V ~
Current consumption	100 mA	20 mA	30 mA
red	**219 120 55**	**219 120 67**	**219 120 68**
yellow	**219 320 55**	**219 320 67**	**219 320 68**

ACCESSORIES:

Base with integrated tube, M 25 x 1.5 mm	**975 209 01**
Cable gland M 25 x 1.5 mm	**975 209 02**

TECHNICAL DIAGRAMS:

see page 270

Sizes of Flashing Beacons



222/225 Flashing Beacon



Flashing Beacon 222
(base mounting)



Flashing Beacon 225 with
integrated mounting bracket

- **Safe CAGE CLAMP® technology**
- **Optimum illumination**
- **Available for base or bracket mounting**
- **Connection without the need to disassemble the product**

TECHNICAL SPECIFICATIONS:

Housing:	PA-GF, high impact
Lens:	PC, transparent; Ring: PC/ABS-Blend
Connection:	CAGE CLAMP® technology max. 2.5 mm²
	Contact protection according to VDE
Cable entry:	Cable diameter max. 10 mm (222)
	Cable diameter 3-6 mm (225)

FLASHING BEACON	**222**	**225**
Fixing:	Base mounting with flat seal	Bracket mounting cable gland M 12 x 1.5 mm
Dimensions (Ø x Height):	75 mm x 79 mm	75 mm x 105 mm
Flash frequency:	c. 0.75 Hz	c. 0.75 Hz
Flash energy:	1 Ws	1 Ws
Life duration:	4 x 10^6 flashes	4 x 10^6 flashes

ORDER SPECIFICATIONS:

Base mounting 222			
Voltage	24 V ⎓	115 V ~	230 V ~
Current consumption	100 mA	20 mA	30 mA
red	**222 100 55**	**222 100 67**	**222 100 68**
yellow	**222 300 55**	**222 300 67**	**222 300 68**

Bracket mounting 225			
Voltage	24 V ⎓	115 V ~	230 V ~
Current consumption	100 mA	20 mA	30 mA
red	**225 100 55**	**225 100 67**	**225 100 68**
yellow	**225 300 55**	**225 300 67**	**225 300 68**
blue	**225 500 55**	**225 500 67**	**225 500 68**

Further colours and voltages on request.

TECHNICAL DIAGRAMS:

see page 270

Sizes of Flashing Beacons

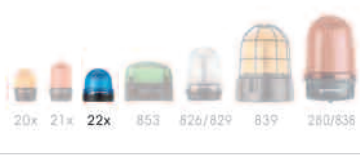

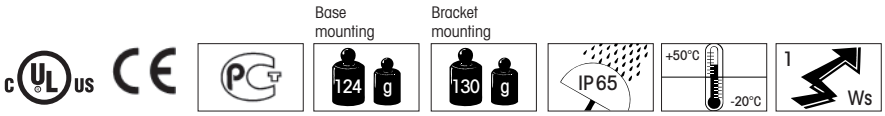

853 LED Double Flash Beacon



- LED Double Flash Beacon in attractive quadratic form
- Intense double flash with low power consumption
- Innovative connector to create traffic light combinations
- Easy assembly due to quick-release screws
- Thread/membrane combination keeps cabling requirements to a minimum

Life duration up to 50,000 hrs

TECHNICAL SPECIFICATIONS:

Dimensions (L x H x W):	85 mm x 85 mm x 72 mm
Housing:	PP-GF, black
Lens:	PC, transparent
Connection:	Screw terminal with wire protection, max. 1.5 mm²
Fixing:	Wall, base and ceiling mounting
Current consumption:	Max. 80 mA at 24 V
Equipment:	Eight self-sealing membranes for cable entry without tools Eight integrated M 20 threads, no nuts required Optional use of a cable gland, thread length of cable gland ≤ 9 mm (accessory)
Assembly:	Incl. snap-on fixing bracket (optional use)

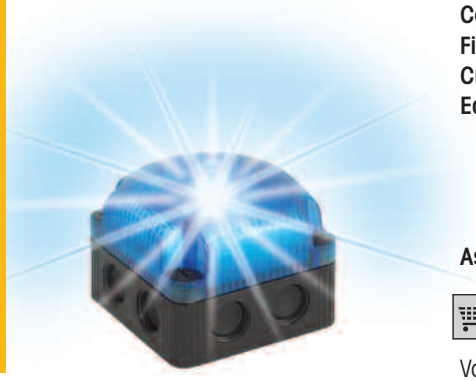

Intense double flash effect with low power consumption

ORDER SPECIFICATIONS:

Voltage	12 V ⎓	24 V ⎓	115-230 V ~
red	**853 110 54**	**853 110 55**	**853 110 60**
green	**853 210 54**	**853 210 55**	**853 210 60**
yellow	**853 310 54**	**853 310 55**	**853 310 60**
clear	**853 410 54**	**853 410 55**	**853 410 60**
blue	**853 510 54**	**853 510 55**	**853 510 60**

ACCESSORIES:

Connector for traffic light combinations (For further information see page 119)	**975 853 01**
Cable gland M 20 x 1.5 mm 8 mm thread length, required for protection rating IP 67	**975 853 02**



Time-saving alternative: The snap-on fixing bracket (included in assembly)

ADDITIONAL INFORMATION:

Save time installing the product

To fix the 853 beacon to the wall four holes have to be drilled. To speed things up the snap-on fixing bracket delivered with the beacon offers a time-saving alternative: simply drill two holes to attach the fixing bracket to the wall and snap the beacon onto it.

The cable can be fed through one of the eight self-sealing membranes without any tools saving 30% of the usual installation time. Once the cable has been connected to the terminals, the lens can be clipped onto the base and secured using the four captive quick-release screws.

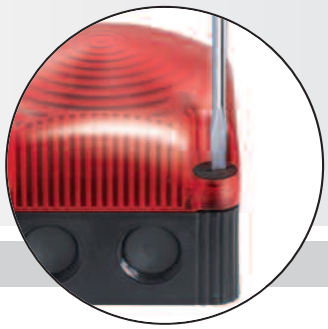

Easy assembly due to quick-release screws

TECHNICAL DIAGRAMS:

see page 287

Sizes of Flashing Beacons



With cable gland

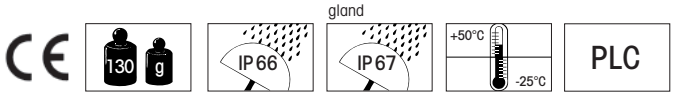

WERMA SIGNALTECHNIK

853 LED EVS* Beacon



- LED EVS Beacon in attractive quadratic form
- Attention-grabbing flickering light
- Extremely powerful signal effect
- Innovative connector to create traffic light combinations
- Easy assembly due to quick-release screws
- Thread/membrane combination keeps cabling requirements to a minimum

Life duration up to 50,000 hrs

TECHNICAL SPECIFICATIONS:

Dimensions (L x H x W):	85 mm x 85 mm x 72 mm
Housing:	PP-GF, black
Lens:	PC, transparent
Connection:	Screw terminal with wire protection, max. 1.5 mm²
Cable entry:	Cable diameter max. 8 mm, optional Cable gland M 20 (accessory)
Fixing:	Wall, base and ceiling mounting
Current consumption:	Max. 200 mA at 24 V
Equipment:	Eight self-sealing membranes for cable entry without tools Eight integrated M 20 threads, no nuts required Optional use of a cable gland, thread length of cable gland ≤ 9 mm (accessory)
Assembly:	Incl. snap-on fixing bracket (optional use, see page 136)



The innovative connector (accessory) enables traffic light combinations to be created in a matter of seconds

ORDER SPECIFICATIONS:

Voltage	12 V ⎓	24 V ⎓	115-230 V ~
red	**853 120 54**	**853 120 55**	**853 120 60**
green	**853 220 54**	**853 220 55**	**853 220 60**
yellow	**853 320 54**	**853 320 55**	**853 320 60**
clear	**853 420 54**	**853 420 55**	**853 420 60**
blue	**853 520 54**	**853 520 55**	**853 520 60**

Available: 1st Quarter 2011.

ACCESSORIES:

Connector for traffic light combinations (For further information see page 119)	**975 853 01**
Cable gland M 20 x 1.5 mm 8 mm thread length, required for protection rating IP 67	**975 853 02**

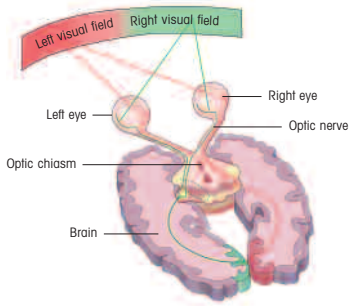

The way in which the brain processes visual stimuli formed the basis for the development of the EVS technology

ADDITIONAL INFORMATION:

* **EVS** = Enhanced Visibility System or Enhanced Visibility System.

Further informationen can be found in the chapter "Tech-Talk" beginning on page 326.

TECHNICAL DIAGRAMS:

see page 287



The "EVS" light signal ensures a maximum attention-grabbing effect

With cable gland

24 V

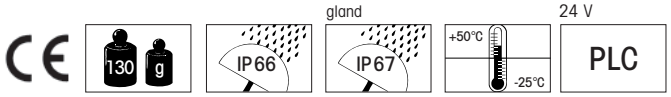

Sizes of Flashing Beacons



897 Double Flash Beacon





- Large signal beacons for powerful signal effectiveness
- High light intensity thanks to optimised lens
- With a multitude of symbols

TECHNICAL SPECIFICATIONS:

Dimensions (Ø x Height):	150 mm x 148 mm
Housing:	PC/ABS-Blend, grey
Lens:	PC, transparent
Socket:	E27 max. 25 W 2 sockets E14 each with max. 15 W with adhesive stickers E27 max. 15 W
Fixing:	Base mounting
Cable entry:	From top or bottom with cable gland M 20 x 1.5 mm or from the back with rubber grommet Ø 6-12 mm
Connection:	Screw terminal, max. 2.5 mm^2
Flash frequency:	1 Hz
Flash energy:	15 Ws
Life duration:	4 x 10^6 flashes

ORDER SPECIFICATIONS:

Voltage	24 V ⎓	230 V ≂
Current consumption	800 mA	200 mA
red	**897 100 55**	**897 100 68**
yellow	**897 300 55**	**897 300 68**

Further colours and voltages on request.

ACCESSORIES:

Fixing bracket, additional reflector, bulbs and LED bulbs, adhesive stickers see Permanent/ Traffic Light Beacon 890 (page 161).

TECHNICAL DIAGRAMS:

see page 291

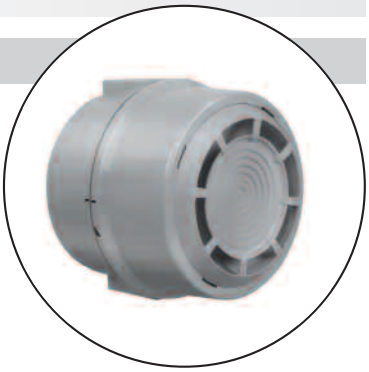

NEW **Audible addition: The Multi-Tone Sounder 190 with 110 dB (see page 228)**

830/835 Flashing Beacon



Base mounting 830



Wall mounting 835





Wire guard and
Bracket (accessories)

- **High flash power**

TECHNICAL SPECIFICATIONS:

Dimensions (Ø x Height):	108 mm x 133 mm (830) 108 mm x 172 mm (835)
Housing:	ABS
Lens:	PC, transparent
Fixing:	830: Base mounting 835: Bracket mounting (included in assembly)
Connection:	Screw terminal with wire protection max. 2.5 mm²
Cable entry:	Rubber squeeze grommet Ø 5-7 mm
Flash frequency:	c. 1 Hz
Life duration:	4 x 10^6 flashes

ORDER SPECIFICATIONS:

Base mounting 830		
Voltage	24 V ⎓	230 V ~
Current consumption	250 mA	140 mA
red	**830 152 55**	**830 152 68**
yellow	**830 352 55**	**830 352 68**

Bracket mounting 835		
Voltage	24 V ⎓	230 V ~
Current consumption	250 mA	140 mA
red	**835 152 55**	**835 152 68**
yellow	**835 352 55**	**835 352 68**

Further colours and voltages on request.

SPECIAL VERSIONS:

- For PLC control systems with reduced starting current
- Green/clear lens for maritime use as specified by the Marine Liability Insurance Association

ACCESSORIES:

Wire guard for base and bracket mounting	**975 830 00**
Bracket for wall mounting for 830	**975 835 01**

ADDITIONAL INFORMATION:

Please also see Flashing Beacon 828 and LED Flashing Beacon 829 with additional advantages (see page 141 and 142)

- High protection rating IP 65
- Simple mounting
- Shock-proof and vibration resistant (LED Flashing Beacon)
- Life duration up to 50,000 hrs (LED Flashing Beacon)

TECHNICAL DIAGRAMS:

see page 284

Base mounting 300 g | Bracket mounting 360 g | IP54 | +50°C -20°C | 5 Ws | PLC

827 Blinking Beacon



Base/Bracket Mounting



Bracket (accessory)



Accessories

- **Tube mounting solution suitable for Ø 25 mm and 1/2" NPT tubes**
- **Simple mounting**
- **Removal of the lens only possible with tools**

TECHNICAL SPECIFICATIONS:

Dimensions (Ø x Height):	98 mm x 137 mm (Base/Bracket mounting) 98 mm x 200 mm (Tube mounting)		
Cable entry:	Cable diameter 5-7 mm		
Housing:	PC/ABS-Blend		
Lens:	PC, transparent		
Connection:	Screw terminal with wire protection 0.5-2.5 mm² Contact protection according to VDE		
Bulb:	Max. 25 W		
Blinking frequency:	1.5 Hz		
Starting current:	24 V≂ 3 A	115 V~ 0,6 A	230 V~ 0,35 A
Socket:	B15d		

Bulb included in assembly.

ORDER SPECIFICATIONS:

Base/Bracket mounting			
Voltage	24 V≂	115 V≂	230 V≂
red	**827 100 75**	**827 100 77**	**827 100 78**
yellow	**827 300 75**	**827 300 77**	**827 300 78**
Tube mounting			
Voltage	24 V≂	115 V≂	230 V≂
red	**827 110 75**	**827 110 77**	**827 110 78**
yellow	**827 310 75**	**827 310 77**	**827 310 78**

ACCESSORIES:

Plastic bracket for wall mounting			**975 826 05**
Wire guard, galvanised, only for base mounting			**975 826 03**
Tube Ø 25 mm, all anodized aluminium, 100 mm long			**975 845 10**
Base for tube, plastic			**975 840 90**
Base for tube, metal			**975 840 91**
Bulb BA15d, 25 W, total length max. 55 mm			
Voltage	24 V≂	115 V~	230 V~
	955 827 35	**955 827 37**	**955 827 38**

TECHNICAL DIAGRAMS:

see page 283

Sizes of Flashing Beacons



Base/Bracket mounting

Base/Bracket mounting

Tube mounting

828 Flashing Beacon



- Tube mounting solution suitable for Ø 25 mm and 1/2" NPT tubes
- Simple mounting
- Removal of the lens only possible with tools
- Also available with 2 frequencies



Bracket (accessory)



Accessories

TECHNICAL SPECIFICATIONS:

Dimensions (Ø x Height):	98 mm x 137 mm (Base/Bracket mounting) 98 mm x 200 mm (Tube mounting)
Cable entry:	Cable diameter 5-7 mm
Housing:	PC/ABS-Blend
Lens:	PC, transparent

FLASHING BEACON 828

Connection:	Screw terminal with wire protection 0.5-2.5 mm² Contact protection according to VDE
Flash frequency:	c. 1 Hz
Life duration:	4 x 10^6 flashes

12 V: Safety contact is triggered by removal of lens.

FLASHING BEACON 828 WITH 2 FREQUENCIES

Connection:	Screw terminal with wire protection 0.5-2.5 mm² Contact protection according to VDE
Flash frequency:	0.5 Hz or 1.5 Hz can be set externally
Life duration:	4 x 10^6 flashes

ORDER SPECIFICATIONS:

FLASHING BEACON 828

Base/Bracket mounting				
Voltage	12 V ⎓	24 V ⎓	115 V ~	230 V ~
Current consumption	500 mA	300 mA	65 mA	150 mA
red	**828 100 54**	**828 100 55**	**828 100 67**	**828 100 68**
yellow	**828 300 54**	**828 300 55**	**828 300 67**	**828 300 68**
clear		**828 400 55**		**828 400 68**
Tube mounting				
Voltage		24 V ⎓	115 V ~	230 V ~
red		**828 140 55**	**828 140 67**	**828 140 68**
yellow		**828 340 55**	**828 340 67**	**828 340 68**
clear		**828 440 55**		

FLASHING BEACON 828 WITH 2 FREQUENCIES

	Base/Bracket mounting	**Tube mounting**
Voltage	24 V ⎓	24 V ⎓
Current consumption	500 mA	500 mA
red	**828 120 55**	**828 160 55**
yellow	**828 320 55**	**828 360 55**

ACCESSORIES:

Accessories see page 140.

TECHNICAL DIAGRAMS:

see page 283

Sizes of Flashing Beacons



Base/Bracket mounting

Base/Bracket mounting

Tube mounting

828 X00 55

829 LED Double Flash Beacon

NEW



Base/Bracket Mounting

- **Intense double flash with low power consumption**
- **High flash power from two consecutive flashes**

Life duration up to 50,000 hrs

TECHNICAL SPECIFICATIONS:

Dimensions (Ø x Height):	98 mm x 137 mm (Base/Bracket mounting) 98 mm x 200 mm (Tube mounting)
Housing:	PC/ABS-Blend
Lens:	PC, transparent
Fixing:	Base mounting, bracket mounting (accessory), tube mounting (accessory)
Cable entry:	Cable diameter 5-7 mm
Connection:	Screw terminal with wire protection max. 2.5 mm² Contact protection according to VDE



Tube Mounting (tube and base for tube – accessory)

ORDER SPECIFICATIONS:

Base/Bracket mounting		
Voltage	24 V ⎓	115-230 V ~
Current consumption	< 100 mA	< 100 mA
red	**829 120 55**	**829 120 68**
yellow	**829 320 55**	**829 320 68**
clear	**829 420 55**	**829 420 68**

Tube mounting		
Voltage	24 V ⎓	115-230 V ~
Current consumption	< 100 mA	< 100 mA
red	**829 127 55**	**829 127 68**
yellow	**829 327 55**	**829 327 68**
clear	**829 427 55**	**829 427 68**

ACCESSORIES:

Plastic bracket for wall mounting	**975 826 05**
Wire guard, galvanised, only for base mounting	**975 826 03**
Tube Ø 25 mm, all anodized aluminium, 100 mm long	**975 845 10**
Base for tube, plastic	**975 840 90**
Base for tube, metal	**975 840 91**

(Accessories see page 140)

TECHNICAL DIAGRAMS:

see page 283

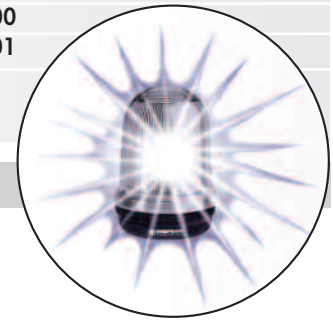

LED flash enables use in safety relevant applications or with batteries/power packs

Sizes of Flashing Beacons



Base/Bracket mounting 200 g | Tube-mounting 235 g | IP 65 | +50°C / -20°C

WERMA SIGNALTECHNIK

829 LED EVS* Beacon



Base/Bracket mounting



Tube mounting



Accessories

- **Attention-grabbing flickering light**
- **Developed on a neurobiological basis**
- **Extremely powerful signal effect**
- **Random sequence of light signals prevents acclimatisation effect**

Life duration up to 50,000 hrs

TECHNICAL SPECIFICATIONS:

Dimensions (Ø x Height):	98 mm x 137 mm (Base/Bracket mounting) 98 mm x 200 mm (Tube mounting)
Housing:	PC/ABS-Blend
Lens:	PC, transparent
Fixing:	Base mounting, bracket mounting (accessory), tube mounting (accessory)
Cable entry:	Cable diameter 5-7 mm
Connection:	Screw terminal with wire protection max. 2.5 mm² Contact protection according to VDE

ORDER SPECIFICATIONS:

Base/Bracket mounting		
Voltage	24 V ⎓	115-230 V ~
Current consumption	< 300 mA	< 150 mA
red	**829 190 55**	**829 190 68**
yellow	**829 390 55**	**829 390 68**
clear	**829 490 55**	**829 490 68**
Tube mounting		
Voltage	24 V ⎓	115-230 V ~
Current consumption	< 300 mA	< 150 mA
red	**829 197 55**	**829 197 68**
yellow	**829 397 55**	**829 397 68**
clear	**829 497 55**	**829 497 68**

ACCESSORIES:

Plastic bracket for wall mounting	**975 826 05**
Wire guard, galvanised, only for base mounting	**975 826 03**
Tube Ø 25 mm, all anodized aluminium, 100 mm long	**975 845 10**
Base for tube, plastic	**975 840 90**
Base for tube, metal	**975 840 91**

ADDITIONAL INFORMATION:

* **EVS** = Enhanced Visibility System or Enhanced Visibility System.

Further information can be found in the chapter "Tech-Talk" beginning on page 326.

TECHNICAL DIAGRAMS:

see page 283



The "EVS" light effect ensures a maximum attention-grabbing effect

Sizes of Flashing Beacons



Base/Bracket mounting: 200 g

Tube mounting: 235 g

IP 65

+50°C

-20°C

839 Double Flash Beacon



- Robust aluminium housing including wire guard
- NEW • High Protection rating IP 67
- High flash power from two consecutive flashes
- Salt water resistant

TECHNICAL SPECIFICATIONS:

Dimensions (Ø x Height):	153 mm x 189 mm
Housing:	Black laquered aluminium with integral wire guard
Lens:	PC, transparent
Fixing:	Base mounting
Connection:	Screw terminal with wire protection max. 2.5 mm^2
Cable entry:	Cable gland M 20 x 1.5 mm (included in assembly) Cable diameter 6-13 mm
Installation position:	As required
Flash energy:	15 Ws
Flash frequency:	c. 1 Hz
Life duration:	4 x 10^6 flashes



ORDER SPECIFICATIONS:

Voltage	24 V ⎓	230 V ~
Current consumption	800 mA	200 mA
red	**839 152 55**	**839 152 68**
yellow	**839 352 55**	**839 352 68**

TECHNICAL DIAGRAMS:

see page 284



Generates a high signal effect thanks to two consecutive flashes

Sizes of Flashing Beacons





WERMA SIGNALTECHNIK

838 Double Flash Beacon



- High flash power from two consecutive flashes
- High light intensity

NEW
- Adaptor for tube mounting (accessory)
- High impact resistance to 20 Joules

TECHNICAL SPECIFICATIONS:

Dimensions (Ø x Height):	142 mm x 218 mm
Housing:	PC/ABS-Blend
Lens:	PC, transparent
Fixing:	Base mounting, Bracket mounting (accessory), Tube mounting (accessory)
Connection:	Screw terminal with wire protection 0.5-2.5 mm²
Cable entry:	Cable diameter 5-7 mm
Flash energy:	15 Ws
Flash frequency:	c. 1 Hz
Power supply frequency:	50/60 Hz
Life duration:	4 x 10^6 flashes



Wire guard (accessory)

ORDER SPECIFICATIONS:

Voltage	24 V ⎓	115 V ~	230 V ~
Current consumption:	800 mA	300 mA	200 mA
red	**838 100 55**	**838 100 67**	**838 100 68**
yellow	**838 300 55**	**838 300 67**	**838 300 68**

ACCESSORIES:

Plastic bracket for wall mounting	**975 883 06**
NEW Adaptor for tube mounting	**975 883 09**
Wire guard, only for base mounting	**975 883 08**

TECHNICAL DIAGRAMS:

see page 284



Adaptor for tube mounting and plastic bracket (accessories)

Sizes of Flashing Beacons



280 LED Double Flash Beacon



Base mounting

- Intense double flash with low power consumption
- High flash power from two consecutive flashes
- NEW • Adaptor for tube mounting (accessory)
- High impact up to 20 Joule

TECHNICAL SPECIFICATIONS:

Life duration up to 50,000 hrs

Dimensions (Ø x Height):	142 mm x 218 mm
Housing:	PC/ABS-Blend
Lens:	PC, transparent
Fixing:	Base mounting, bracket mounting (accessory), tube mounting (accessory)
Connection:	Screw terminal with wire protection max. 2.5 mm² Contact protection according to VDE
Cable entry:	Cable diameter 5-7 m
Duty cycle:	100 %

ORDER SPECIFICATIONS:

Voltage	24 V ⎓	115-230 V ~
Current consumption	< 150 mA	< 100 mA
red	**280 150 55**	**280 150 60**
yellow	**280 350 55**	**280 350 60**
clear	**280 450 55**	**280 450 60**

ACCESSORIES:

Plastic bracket for wall mounting	**975 883 06**
NEW Adaptor for tube mounting	**975 883 09**
Wire guard, only for base mounting	**975 883 08**



NEW The new adaptor (accessory) allows quick and simple mounting on a tube

ADDITIONAL INFORMATION:

The LED Beacon 280 is also available as LED EVS Beacon (see page 147), LED Permanent Beacon (see page 127) or LED Rotating Beacon (see page 154).

TECHNICAL DIAGRAMS:

see page 271



Two consecutive flashes generate a brilliant signal



Plastic bracket, Adaptor for tube mounting and wire guard (accessories)

Sizes of Flashing Beacons

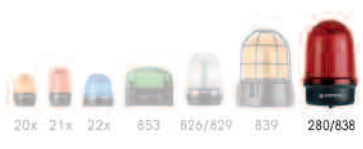



WERMA SIGNALTECHNIK

280 LED EVS* Beacon



Base mounting



Bracket mounting (accessory)

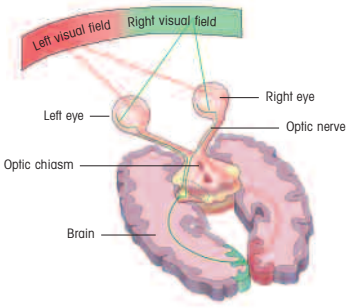

The way in which the brain processes visual stimuli formed the basis for the development of the EVS technology

Sizes of Flashing Beacons



- **Attention-grabbing flickering light**
- **Developed on a neurobiological basis**
- **Extremely powerful signal effect**
- **Random sequence of light signals prevents acclimatisation effect**

TECHNICAL SPECIFICATIONS:

Life duration up to 50,000 hrs

Dimensions (Ø x Height):	142 mm x 218 mm
Housing:	PC/ABS-Blend
Lens:	PC, transparent
Fixing:	Base mounting, bracket mounting (accessory), tube mounting (accessory)
Connection:	Screw terminal with wire protection max. 2.5 mm² Contact protection according to VDE
Cable entry:	Cable diameter 5-7 mm
Duty cycle:	100 %

ORDER SPECIFICATIONS:

Voltage	24 V ⎓	115-230 V ~
Current consumption	< 500 mA	< 150 mA
red	**280 160 55**	**280 160 60**
yellow	**280 360 55**	**280 360 60**
clear	**280 460 55**	**280 460 60**

ACCESSORIES:

Plastic bracket for wall mounting	**975 883 06**
NEU Adaptor for tube mounting	**975 883 09**
Wire guard, only for base mounting	**975 883 08**

(Accessories see page 146)

ADDITIONAL INFORMATION:

*** EVS** = Enhanced Visibility System or Enhanced Visibility System
Further informationen can be found in the chapter "Tech-Talk" beginning on page 326.

EVS – Attention-grabbing light effect on neurobiological basis
WERMA has developed a stochastic, random flickering light on a neurobiological basis: EVS, Enhanced Visibility System. This generates an optimal attention level never reached by previous signal devices.

For the EVS system WERMA employs light emitting diodes. A microprocessor generates random light signals. This gives the light a very "agitated" character which proves highly effective in drawing the attention of those in its vicinity – even when seen out of the corner of the eye. LEDs are capable of generating the required high flickering frequency with ease, frequencies which Xenon flashes for example are incapable of generating.

TECHNICAL DIAGRAMS:

see page 271

CE 500 g IP65 +50°C -30°C 20

885 Rotating Mirror Beacon



Base mounting





Plastic bracket und wire guard (accessories)

- **High light intensity in compact form**
- **Award-winning design – winner of the "iF product design award 2006"**
- **Extremely quiet**
- **Can be mounted as required**
- **Installation without the need to disassemble the mechanism**

TECHNICAL SPECIFICATIONS:

Dimensions (Ø x Height):	98 mm x 151 mm
Housing:	PC/ABS-Blend
Lens:	PC, transparent
Fixing:	Base mounting, bracket mounting (accessory)
Connection:	Screw terminal with wire protection max. 2.5 mm² Contact protection according to VDE
Cable entry:	Cable diameter 5-7 mm
Installation position:	As required
Halogen bulb:	G 6.35 20 W 12 V / 24 V
Mirror rotation rate:	c. 180 r.p.m.
Service life of drive:	> 5,000 hrs
Duty cycle:	100 %

Halogen bulb included in assembly.

ORDER SPECIFICATIONS:

Voltage	12 V⎓	24 V≂	115 V~ / 115 V⎓ / 230 V~ / 230 V⎓
Current consumpt.	1.7 A	1.0 A	0.35 A / 0.2 A / 0.15 A / 0.1 A

red	**885 100 54**	**885 100 75**	**885 100 78**
green	**885 200 54**	**885 200 75**	**885 200 78**
yellow	**885 300 54**	**885 300 75**	**885 300 78**
blue	**885 500 54**	**885 500 75**	**885 500 78**

ACCESSORIES:

Halogen bulb for wall mounting	**975 826 05**
Wire guard, galvanised, only for base mounting	**975 826 03**

SPARE PARTS:

Halogen bulb 20 W/12 V for 12 V⎓ 115 V≂, 230 V~	**955 885 24**
Halogen bulb 20 W/24 V for 24 V≂	**955 885 25**

TECHNICAL DIAGRAMS:

see page 290

Sizes of Rotating Beacons



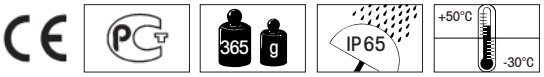

WERMA SIGNALTECHNIK

885 Rotating Mirror Beacon



Tube mounting



Rotating Mirror Beacon 885 with tube and base (accessories)

- **Tube mounting solution suitable for Ø 25 mm and 1/2" NPT tubes**
- **Can be mounted as required**
- **Full rotating mirror functionality in compact form**

TECHNICAL SPECIFICATIONS:

Dimensions (Ø x Height):	98 mm x 200 mm
Housing:	PC/ABS-Blend
Lens:	PC, transparent
Fixing:	Tube mounting
Connection:	Screw terminal with wire protection max. 2.5 mm². Contact protection according to VDE
Cable entry:	Cable diameter 5-7 mm
Installation position:	As required
Halogen bulb:	G 6.35 20 W 12 V/24 V
Mirror rotating rate:	c. 180 r.p.m.
Service life of drive:	> 5,000 hrs
Duty cycle:	100 %

Halogen bulb included in assembly.

ORDER SPECIFICATIONS:

Voltage	12 V ⎓	24 V ≂	115 V ~ / 115 V ⎓ / 230 V ~ / 230 V ⎓
Current consumpt.	1.7 A	1.0 A	0.35 A / 0.2 A / 0.15 A / 0.1 A
red	**885 110 54**	**885 110 75**	**885 110 78**
green	**885 210 54**	**885 210 75**	**885 210 78**
yellow	**885 310 54**	**885 310 75**	**885 310 78**
blue	**885 510 54**	**885 510 75**	**885 510 78**

ACCESSORIES:

Base for tube mounting Ø 25 mm, plastic, Incl. rubber seal	**975 840 90**
Base for tube mounting Ø 25 mm, metal, Incl. rubber seal	**975 840 91**
Tube Ø 25 mm, all anodized alluminium	
100 mm	**975 845 10**
250 mm	**975 840 25**

TECHNICAL DIAGRAMS:

see page 290

Sizes of Rotating Beacons



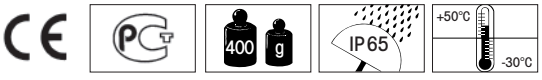

885 Rotating Mirror Beacon



- **Integrated flexible tube**
- **With 2 pole plug connection according to ISO 4165**
- **Elastic material prevents the beacon from breaking off**
- **Full rotating mirror functionality in compact form**

TECHNICAL SPECIFICATIONS:

Dimensions (Ø x Height):	98 mm x 255 mm
Housing:	PC/ABS-Blend
Lens:	PC, transparent
Fixing:	Tube mounting
Connection:	2 pole plug connection (according to ISO 4165)
Cable entry:	Cable diameter 5-7 mm
Installation position:	As required
Halogen bulb:	G 6.35 20 W 12 V/24 V
Mirror rotating rate:	c. 180 r.p.m.
Service life of drive:	> 5,000 hrs
Duty cycle:	100 %

Halogen bulb included in assembly.

ORDER SPECIFICATIONS:

Voltage	12 V ⎓	24 V ≂
Current consumption	1.7 A	1.0 A
red	**885 120 54**	**885 120 75**
green	**885 220 54**	**885 220 75**
yellow	**885 320 54**	**885 320 75**
blue	**885 520 54**	**885 520 75**

ACCESSORIES:

Flange with counter-plug for electrical connection **975 826 20**



Flange with counter-plug for electrical connection (accessory)

TECHNICAL DIAGRAMS:

see page 290



The flexible tube, made of an elastic material, is hard-wearing and prevents the beacon from breaking off

Sizes of Rotating Beacons





WERMA SIGNALTECHNIK

839 Rotating Mirror Beacon



- Robust aluminium housing including wire guard
- Extreme durability thanks to low wear belt drive
- Salt water resistant
- Extremely quiet
- Installation without the need to disassemble the mechanism

TECHNICAL SPECIFICATIONS:

Dimensions (Ø x Height):	153 mm x 189 mm
Housing:	Black laquered aluminium with integral wire guard
Lens:	PC, transparent
Fixing:	Base mounting
Connection:	Screw terminal with wire protection max. 2.5 mm²
Cable entry:	Cable gland M 20 x 1.5 mm (included in assembly) Cable diameter 6-13 mm
Installation position:	As required
Halogen bulb:	G 6.35 20 W 12/24 V
Mirror rotating rate:	c. 180 r.p.m.
Service life of drive:	> 5.000 hrs



ORDER SPECIFICATIONS:

Voltage	24 V≂	115 V~	/ 115 V⎓	/ 230 V~	/ 230 V⎓
Current consumption	1.0 A	0.35 A	/ 0.5 A	/ 0.15 A	/ 0.1 A
red	**839 160 75**		**839 160 78**		
yellow	**839 360 75**		**839 360 78**		

ACCESSORIES:

SPARE PARTS:

Halogen bulb 20 W/12 V for 115 V≂, 230 V~	**955 885 24**
Halogen bulb 20 W/24 V for 24 V≂	**955 885 25**

TECHNICAL DIAGRAMS:

see page 284



NEW **Also suitable for use in rough conditions**

Sizes of Rotating Beacons



839 LED Rotating Beacon





- Robust aluminium housing including wire guard
- Wear-free due to the abscence of any moving mechanical components
- Salt water resistant
- Intense rotating signal effect with low power consumption
- AC multi-voltage version

TECHNICAL SPECIFICATIONS:

Life duration up to 50,000 hrs

Dimensions (Ø x Height):	153 mm x 189 mm
Housing:	Black laquered aluminium with integral wire guard
Lens:	PC, transparent
Fixing:	Base mounting
Connection:	Screw terminal with wire protection max. 2.5 mm²
Cable entry:	Cable gland M 20 x 1.5 mm (included in assembly) Cable diameter 6-13 mm
Installation position:	As required
Rotation rate:	c. 180 r.p.m.

ORDER SPECIFICATIONS:

Voltage	24 V ⎓	115-230 V ~
Current consumption	150 mA	70-180 mA
red	**839 120 55**	**839 120 68**
yellow	**839 320 55**	**839 320 68**

TECHNICAL DIAGRAMS:

see page 284



Generates a high signal effect thanks to the LEDs programmed to create a rotating light

Sizes of Rotating Beacons



1,28 kg IP67 +50°C -30°C

WERMA SIGNALTECHNIK

829 LED Rotating Beacon



Tube mounting



Base/Bracket mounting



Accessories

- **Extremely high light intensitiy**
- **Wear-free due to the absence of any moving mechanical components**
- **Intense rotating signal effect with low power consumption**
- **Shock-proof and vibration-resistant**

Life duration up to 50,000 hrs

TECHNICAL SPECIFICATIONS:

Dimensions (Ø x Height):	98 mm x 137 mm (Base/Bracket mounting) 98 mm x 200 mm (Tube mounting)
Housing:	PC/ABS-Blend
Lens:	PC, transparent
Fixing:	Base mounting, bracket mounting (accessory), tube mounting (accessory)
Cable entry:	Cable diameter 5-7 mm
Connection:	Screw terminal with wire protection max. 2.5 mm² Contact protection according to VDE
Rotation rate:	c. 180 r.p.m.

ORDER SPECIFICATIONS:

Base/Bracket mounting		
Voltage	24 V ⎓	115-230 V ~
Current consumption	< 170 mA	< 200 mA
red	**829 110 55**	**829 110 68**
green	**829 210 55**	**829 210 68**
yellow	**829 310 55**	**829 310 68**
clear	**829 410 55**	**829 410 68**
blue	**829 510 55**	**829 510 68**

Tube mounting		
Voltage	24 V ⎓	115-230 V ~
Current consumption	< 170 mA	< 200 mA
red	**829 117 55**	**829 117 68**
green	**829 217 55**	**829 217 68**
yellow	**829 317 55**	**829 317 68**
clear	**829 417 55**	**829 417 68**
blue	**829 517 55**	**829 517 68**

ACCESSORIES:

Plastic bracket for wall mounting	**975 826 05**
Wire guard, galvanised, only for base mounting	**975 826 03**
Tube Ø 25 mm, all anodized aluminium, 100 mm long	**975 845 10**
Base for tube, plastic	**975 840 90**
Base for tube, metal	**975 840 91**

TECHNICAL DIAGRAMS:

see page 283



Generates a distinctive rotating signal by triggering high output LEDs in sequence

Sizes of Rotating Beacons



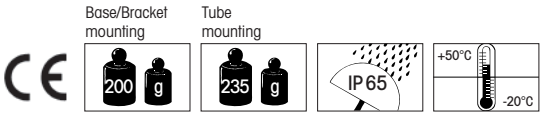

280 LED Rotating Beacon



- Extremely high light intensity
- Wear-free due to the absence of any moving mechanical components
- Intense rotating signal effect with low power consumption
- Life duration up to 50,000 hrs
- Shock proof and resistant against vibration
- High impact resistance to 20 Joules

TECHNICAL SPECIFICATIONS:

Life duration up to 50,000 hrs

Dimensions (Ø x Height):	142 mm x 218 mm
Housing:	PC/ABS-Blend, black
Lens:	PC, transparent
Fixing:	Base mounting, bracket mounting (accessory), tube mounting (accessory)
Connection:	Screw terminal with wire protection max. 0.5-2.5 mm² Contact protection according to VDE
Cable entry:	Cable diameter 5-7 mm
Rotation rate:	c. 180 r.p.m.
Duty cycle:	100 %





High impact resistance to 20 Joules

ORDER SPECIFICATIONS:

Voltage	24 V ⎓	115 - 230 V ~
Current consumption	150 mA	70-180 mA
red	**280 120 55**	**280 120 68**
yellow	**280 320 55**	**280 320 68**

ACCESSORIES:

Plastic bracket for wall mounting	**975 883 06**
NEW Adaptor for tube mounting	**975 883 09**
Wire guard, only for base mounting	**975 883 08**

TECHNICAL DIAGRAMS:

see page 271



Plastic bracket, adaptor for tube mounting and wire guard (accessories)



Generates a high signal effect thanks to the LEDs programmed to create a rotating light

Sizes of Rotating Beacons



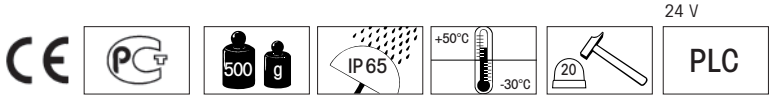

WERMA SIGNALTECHNIK

884 Revolving Signal Beacon



- Greater signal effect particularly in poor conditions thanks to three light beams
- Low rotation rate
- Three Fresnel lenses effect light convergence and optimise visibility
- High impact resistance to 20 Joules

TECHNICAL SPECIFICATIONS:

Dimensions (Ø x Height):	142 m x 218 mm
Housing:	PC/ABS-Blend
Lens:	PC, transparent
Fixing:	Base mounting, bracket mounting, tube mounting (accessory)
Connection:	Screw terminal with wire protection max. 2.5 mm²
	Contact protection according to VDE
Cable entry:	Cable diameter 5-7 mm
Drive:	Wheel and disc drive, motor in centre of gravity
Halogen bulb:	G 6.35 35 W 12 V / 24 V
Mirror rotation rate:	60 r.p.m.
Service life of drive:	> 5,000 hrs
Duty cycle:	100 %

Halogen bulb included in assembly.



Bracket (accessory)

ORDER SPECIFICATIONS:

Voltage	24 V≂	230 V~
Current consumption	1.6 A	0.17 A
red	**884 100 75**	**884 100 68**
green	**884 200 75**	**884 200 68**
yellow	**884 300 75**	**884 300 68**
blue	**884 500 75**	**884 500 68**

Further colours and voltages on request.

ACCESSORIES:

Plastic bracket for wall mounting	**975 883 06**
NEW Adaptor for tube mounting	**975 883 09**
Base for tube mounting	**975 840 91**
Tube, Ø 25 mm, 100 mm long	**975 845 10**
Tube, Ø 25 mm, 250 mm long	**975 840 25**
Wire guard, only for base mounting	**975 883 08**



Plastic bracket, adaptor for tube mounting and wire guard (accessories)

SPARE PARTS:

Halogen bulb 35 W/12 V for 230 V~	**955 883 34**
Halogen bulb 35 W/24 V for 24 V≂	**955 883 35**



3 Fresnel lenses are set at a 120° angle

TECHNICAL DIAGRAMS:

see page 290

Sizes of Rotating Beacons

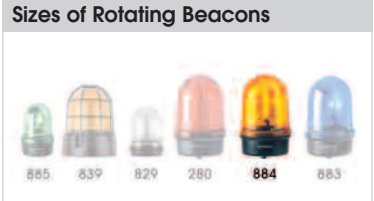



883 Rotating Mirror Beacon



- Extreme durability thanks to low wear wheel and disc drive
- NEW • Adaptor for tube mounting (accessory)
- Installation without the need to disassemble the mechanism
- High impact resistance to 20 Joules

TECHNICAL SPECIFICATIONS:

Dimensions (Ø x Height):	142 mm x 218 mm
Housing:	PC/ABS-Blend
Lens:	PC, transparent
Fixing:	Base mounting, bracket mounting, tube mounting (accessory)
Connection:	Screw terminal with wire protection max. 2.5 mm²
	Contact protection according to VDE
Cable entry:	Cable diameter 5-7 mm
Drive:	Wheel and disc drive, motor in centre of gravity
Halogen bulb:	G 6.35 35 W 12 V / 24 V
Mirror rotation rate:	c. 180 r.p.m.
Service life of drive:	> 5,000 hrs
Duty cycle:	100 %

Halogen bulb included in assembly.



Bracket (accessory)

ORDER SPECIFICATIONS:

Voltage	12 V⎓	24 V≂	115 V≂	230 V~
Current consumpt.	3 A	1.6 A	0.35 A	0.17 A
red	**883 100 54**	**883 100 75**	**883 100 77**	**883 100 68**
green	**883 200 54**	**883 200 75**	**883 200 77**	**883 200 68**
yellow	**883 300 54**	**883 300 75**	**883 300 77**	**883 300 68**
blue	**883 500 54**	**883 500 75**	**883 500 77**	**883 500 68**

Further colours and voltages on request.

ACCESSORIES:

Plastic bracket for wall mounting	**975 883 06**
NEW Adaptor for tube mounting	**975 883 09**
Base for tube mounting	**975 840 91**
Tube, Ø 25 mm, 100 mm long	**975 845 10**
Tube, Ø 25 mm, 250 mm long	**975 840 25**
Wire guard, only for base mounting	**975 883 08**



Plastic bracket, adaptor for tube mounting and wire guard (accessories)

SPARE PARTS:

Halogen bulb 35 W/12 V for 12 V⎓, 115 V≂, 230 V~	**955 883 34**
Halogen bulb 35 W/24 V for 24 V≂	**955 883 35**



Low wear wheel and disc drive

TECHNICAL DIAGRAMS:

see page 290

Sizes of Rotating Beacons





WERMA SIGNALTECHNIK

880 Rotating Mirror Beacon



- **High intensity optical signal with halogen bulb**
- **"e" approval for automotive use (yellow, 24 V)**

TECHNICAL SPECIFICATIONS:

Dimensions (Ø x Height):	152 mm x 215 mm
Housing:	Thermoplastic with injected metal base
Lens:	Plexiglass (PMMA)
Fixing:	Base, bracket (accessory), tube mounting (accessory)
Connection:	Screw terminal 0.5-1.5 mm²
Cable entry:	Cable diameter 5-8 mm
Mirror rotation rate:	c. 170 r.p.m.

Assembly incl. halogen bulb H1.



ORDER SPECIFICATIONS:

Voltage	24 V⎓	230 V~
Current consumption	3.0 A	0.3 A
red	**880 152 55**	**880 152 68**
yellow	**880 352 55**	**880 352 68**

Further colours and voltages on request.

ACCESSORIES:

Flange for tube, max. 29.8 mm	**880 000 00**
Bracket for wall mounting	**975 881 01**

SPARE PARTS:

Bulb H 1 55 W for 230 V~	**955 880 34**
Bulb H 1 70 W for 24 V⎓	**955 880 35**

ADDITIONAL INFORMATION:

Please also see Rotating Mirror Beacon 883 with additional advantages (see page 156)

- High protection rating IP 65
- Modern design
- High impact to 20 Joules
- Long life duration thanks to low wear wheel and disc drive
- Installation without the need to disassemble the mechanism

TECHNICAL DIAGRAMS:

see page 289

230 V 24 V 880 352 55

CE PG 2,3 kg 1,4 kg IP54 +50°C -20°C e2

881 Rotating Mirror Beacon





- **Competitively priced rotating mirror beacon with bulb included**

TECHNICAL SPECIFICATIONS:

Dimensions (Ø x Height):	150 mm x 204 mm
Housing:	ABS
Lens:	PC, transparent
Fixing:	Base, bracket (accessory), tube mounting (accessory)
Connection:	Screw terminal 0.5-1.5 mm²
Cable entry:	Cable diameter 5-8 mm
Mirror rotating rate:	c. 170 r.p.m.

Bulb included in assembly.

ORDER SPECIFICATIONS:

Voltage	48 V≂	230 V~
Current consumption	1.0 A	0.3 A
red	**881 152 56**	**881 152 98**
yellow	**881 352 56**	**881 352 98**

ACCESSORIES:

Flange for tube, max. 29.8 mm	**880 000 00**
Bracket for wall mounting	**975 881 01**

SPARE PARTS:

Bulb E14, 40 W

Voltage	48 V≂	230 V≂
	955 880 66	**955 880 68**

TECHNICAL DIAGRAMS:

see page 290

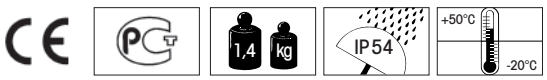

WERMA SIGNALTECHNIK

890 LED Beacon/LED Traffic Light



LED Permanent Beacon



LED Traffic Light Combination with mounting bracket (accessory)



Clear lenses ensure signalling effect even in direct sunlight

- LED Beacon for traffic light combinations
- Clear signalling effect even in direct sunlight
- Maintainance-free LED technology
- Innovative fixing bracket for simple mounting

Life duration up to 50,000 hrs

TECHNICAL SPECIFICATIONS:

Dimensions (Ø x Height):	150 mm x 154 mm
Housing:	PC/ABS-Blend, grey
Lens:	PC, transparent
Fixing:	Base mounting, fixing bracket (accessory), tube mounting (accessory)
Connection:	Screw terminal max. 1.5 mm²
Installation position:	As required
Cable entry:	From top or bottom with cable gland M 20 x 1.5 mm or from the back with rubber grommet Ø 6-12 mm, included in assembly.

ORDER SPECIFICATIONS:

Voltage	12-24 V ⎓	115 V ~	230 V ~
Current consumption	< 200 mA	< 35 mA	< 35 mA
red	**890 120 55**	**890 120 67**	**890 120 68**
green	**890 220 55**	**890 220 67**	**890 220 68**
yellow	**890 320 55**	**890 320 67**	**890 320 68**

ACCESSORIES:

FIXING BRACKET

Fixing bracket for one beacon	**975 890 33**
Fixing bracket for two beacons	**975 890 34**
Fixing bracket for three beacons	**975 890 35**
Fixing bracket for four beacons	**975 890 37**

Mounting material and connecting grommet included in assembly.
Further information can be found on page 162.

CONNECTING GROMMET

Connecting grommet for traffic light combinations	**975 890 25**

TUBE ADAPTOR

NEW

Adaptor for tube mounting (suitable for Ø 75 mm tubes, see page 161)	**975 890 36**

TECHNICAL DIAGRAMS:

see page 291

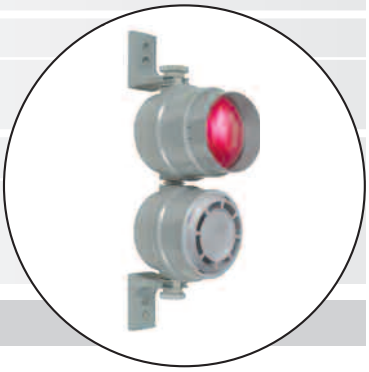

NEW **The LED Beacon 890 in combination with Multi-Tone Sounder 190 (see page 228)**

CE PG 490 g IP 65 +50°C -20°C

890 Permanent/Traffic Light Beacon



Permanent Beacon

- **Permanent Beacon for traffic light combinations**
- **Innovative fixing bracket for simple mounting**
- **Also with two bulb sockets for uniform safety, even in the case of bulb failure**

TECHNICAL SPECIFICATIONS:

Dimensions (Ø x Height):	150 mm x 154 mm
Housing:	PC/ABS-Blend, grey
Lens:	PC, transparent
Socket:	E27 max. 25 W at 890 X00 00 2 sockets each with max. 15 W at 890 X10 00 with adhesive stickers E27 max. 15 W
Fixing:	Base mounting, fixing bracket (accessory), tube mounting (accessory)
Connection:	Screw-free clamp mechanism max. 1.5 mm²
Cable entry:	From top or bottom with cable gland M 20 x 1.5 mm or from the back with rubber grommet Ø 6-12 mm, included in assembly



Traffic Light Combination with mounting bracket (accessory)

ORDER SPECIFICATIONS:

PERMANENT BEACON

Voltage	12 – 240 V≂
red	**890 100 00**
green	**890 200 00**
yellow	**890 300 00**
clear	**890 400 00**
blue	**890 500 00**

PERMANENT BEACON WITH 2 SOCKETS (INCL. REFLECTOR)

Voltage	12 – 240 V≂
red	**890 110 00**
green	**890 210 00**
yellow	**890 310 00**

Further colours and voltages on request.



Permanent beacon with two sockets

ADDITIONAL INFORMATION:

Please also see LED Beacon/LED Traffic Light 890 with additional advantages (see p. 159)

- Maintenance-free LED technology
- Life duration up to 50,000 hrs
- Clear signalling effect even in direct sunlight





WERMA SIGNALTECHNIK



NEW **Beacon 890 in combination with Multi-Tone Sounder 190 (see page 228)**



NEW **The new adaptor (accessory) allows quick and simple mounting on a tube (Ø 75 mm)**



890 with adhesive sticker (accessory)

ACCESSORIES:

FIXING BRACKET

Fixing bracket for one beacon	**975 890 33**
Fixing bracket for two beacons	**975 890 34**
Fixing bracket for three beacons	**975 890 35**
Fixing bracket for four beacons	**975 890 37**

Mounting material and connecting grommet included in assembly.
Further information can be found on page 162.

CONNECTING GROMMET

Connecting grommet for traffic light combinations	**975 890 25**

NEW

TUBE ADAPTOR

Adaptor for tube mounting (suitable for Ø 75 mm tubes)	**975 890 36**

REFLECTOR

Additional reflector for 890 X00 00	**975 890 02**

BULBS

LED bulb E27, 24 V	**956 X20 75**
LED bulb E27, 115 V	**956 X20 67**
LED bulb E27, 230 V	**956 X20 68**

X see page 167.

Bulb E27, 24 V / 25 W	**955 890 55**
Bulb E27, 115 V / 25 W	**955 890 67**
Bulb E27, 230 V / 25 W	**955 890 68**
Bulb E14, 230 V / 15 W	**955 890 38**

ADHESIVE STICKERS:

→	**975 890 52**
STOP	**975 890 53**
START	**975 890 54**
KEIN ZUTRITT	**975 890 56**
ZUTRITT	**975 890 55**
BETRIEB	**975 890 57**
STÖRUNG	**975 890 58**
↯	**975 890 64**
✋	**975 890 65**



TECHNICAL DIAGRAMS:

see page 291

890 Fixing bracket for 890/190



Fixing bracket for
(LED) Beacons 890
and Multi-Tone Sounder 190

- **Beacon/Traffic Light can be completely pre-assembled on the fixing bracket and connected before attachment**
- **Easy mounting in just a few steps**
- NEW **Also suitable for Multi-Tone Sounder 190**
- **High Protection rating IP 65**

TECHNICAL SPECIFICATIONS:

Material Fixing bracket:	PC/ABS-Blend
Material Connecting Grommet:	PA 6.6
Assembly:	Fixing bracket with mounting material and connecting grommet Beacon not included in assembly.
Suitable for:	LED Beacon/LED Traffic Light 890 (see page 159) Permanent/Traffic Light Beacon 890 (see page 160) Multi-Tone Sounder 190 (see page 228)

ORDER SPECIFICATIONS:

Fixing bracket for one beacon	**975 890 33**
Fixing bracket for two beacons	**975 890 34**
Fixing bracket for three beacons	**975 890 35**
Fixing bracket for four beacons	**975 890 37**



The fixing bracket can be mounted
pointing inwards or outwards

NEW FIXING BRACKET FOR SIMPLE MOUNTING:

Method No. 1

- Attach the bracket to the wall
- Connect the pre-assembled Traffic Light/Multi-Tone Sounder
- Tighten the nuts on both sides

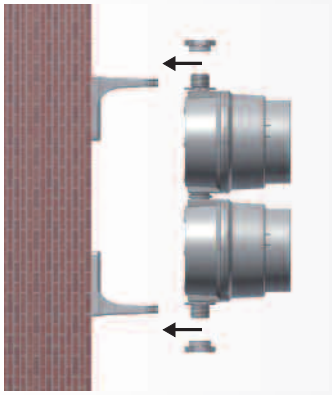

Method No. 2

- Connect and assemble the Traffic Light
- Attach the Traffic Light/Multi-Tone Sounder to the bracket and tighten the nuts on both sides
- Attach the complete bracket and Traffic Light/Multi-Tone Sounder to the wall

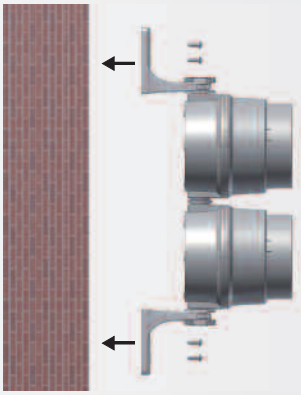

TECHNICAL DIAGRAMS:

see page 304



WERMA SIGNALTECHNIK

853 Traffic Light

NEW



The innovative connector (accessory) enables traffic light combinations to be created in a matter of seconds

- **LED Permanent, LED Double Flash or LED EVS Beacon in attractive quadratic form**
- **Innovative connector to create traffic light combinations**
- **Easy assembly due to quick-release screws**
- **Thread/membrane combination keeps cabling requirements to a minimum**

TECHNICAL SPECIFICATIONS:

Life duration up to 50,000 hrs

Dimensions (L x H x W):	85 mm x 85 mm x 72 mm
Housing:	PP-GF, black
Lens:	PC, transparent
Connection:	Screw terminal with wire protection, max. 1.5 mm²
Fixing:	Wall, base and ceiling mounting
Possible colours:	Red, green, yellow, clear, blue
Operating voltage:	12 V⎓, 24 V⎓, 115-230 V~
Current consumption:	Max. 80 mA at 24 V (LED Permanent Beacon) Max. 50 mA at 24 V (LED Double Flash Beacon) Max. 50 mA at 24 V (LED EVS Beacon)
Equipment:	Eight self-sealing membranes for cable entry without tools Eight integrated M 20 threads, no nuts required Optional use of a cable gland, thread length of cable gland ≤ 9 mm (accessory)
Assembly:	Incl. snap-on fixing bracket (optional use)

ORDER SPECIFICATIONS:

LED Permanent Beacon 853	**see page 119**
LED Double Flash Beacon 853	**see page 136**
LED EVS Beacon 853	**see page 137**
Available: 1st Quarter 2011.	

ACCESSORIES:

Connector for traffic light combinations	**975 853 01**
Cable gland M 20 x 1.5 mm 8 mm thread length, required for protection rating IP 67	**975 853 02**



Three highly visible light effects are available

ADDITIONAL INFORMATION:

Combinations made easy

The LED Beacon 853 can be easily turned into a traffic light combination. Simply attach different coloured beacons together using the connector.

The eight cable entries with both self-sealing membranes and integrated M 20 threads enable additional beacons to be attached to every side. There is no limit to the range of possible lighting designs that can be created.



Individual lighting designs thanks to eight possible cable entries

TECHNICAL DIAGRAMS:

see page 287

853 X00 XX 135 g | 853 X10 XX 130 g | 853 X20 XX 130 g | With cable gland: IP66 / IP67 | +50°C / -25°C | 24 V PLC

894 LED Traffic Light



LED Traffic Light (3 tier)



The direction of the optical signal can be individually adjusted



Clear lenses ensure signalling effect even in direct sunlight

- High visibility LED Traffic Light in an innovative, award-winning design
- Clear signalling even in direct sunlight thanks to clear lenses NEW
- Simple mounting due to integrated mounting bracket
- Very good sideward visibility
- Protection rating IP 65/IP 69k

Life duration up to 50,000 hrs

TECHNICAL SPECIFICATIONS:

Dimensions (L x H x W):	2 tier: 85 mm x 309 mm x 136 mm 3 tier: 85 mm x 394 mm x 136 mm
Housing:	PC/ABS, grey
Lens:	PC, transparent
Fixing:	Wall mounting, tube mounting (accessory)
Installation position:	Vertical/hanging
Connection:	Screw terminal with wire protection max. 1.5 mm²
Cable entry:	Cable diameter max. 13 mm
Duty cycle:	100 %

ORDER SPECIFICATIONS:

Voltage	24 V ⎓	115-230 V ~
Current consumption	60 mA (red/yellow) 120 mA (green)	30 mA per tier at 230 V/50 Hz
red / green	**894 160 55**	**894 160 68**
red / yellow / green	**894 180 55**	**894 180 68**

ACCESSORIES:

Fixing bracket underneath	**975 894 01**
Adaptor for tube mounting (suitable for Ø 75 mm tubes, see page 165)	**975 894 02**

ADDITIONAL INFORMATION:

"Small traffic light series" wins "iF product design award 2009"
WERMA has won the prestigious "iF product design award" for the design and production of its "small traffic light series". Since its introduction in 1953, this design prize has been an enduring, renowned hallmark for "excellent" design.



High visibility LED Traffic Light with integrated siren see page 193

TECHNICAL DIAGRAMS:

see page 291

2 tier 3 tier



WERMA SIGNALTECHNIK

LED Beacon / LED Traffic Light



product design award 2009

LED Beacon (1 tier)



The direction of the optical signal can be individually adjusted



NEW The new adaptor (accessory) allows quick and simple mounting on a tube

- High visibility LED Beacon/ Traffic Light in an innovative, award-winning design
- Colour intensive light effect thanks to LEDs in the same colour as the lenses
- Simple mounting due to integrated mounting bracket
- Very good sideward visibility
- NEW Protection rating IP 65/IP 69k

Life duration up to 50,000 hrs

TECHNICAL SPECIFICATIONS:

Dimensions (L x H x W):	1 tier: 85 mm x 224 mm x 136 mm 2 tier: 85 mm x 309 mm x 136 mm 3 tier: 85 mm x 394 mm x 136 mm
Housing:	PC/ABS, grey
Lens:	PC, transparent
Fixing:	Wall mounting, tube mounting (accessory)
Installation position:	Vertical/hanging
Connection:	Screw terminal with wire protection max. 1.5 mm²
Cable entry:	Cable diameter max. 13 mm
Duty cycle:	100 %

ORDER SPECIFICATIONS:

Voltage	24 V ⎓	115-230 V ~
Current consumption	60 mA (red/yellow) 120 mA (green)	30 mA per tier at 230 V/50 Hz
red	**894 010 55**	**894 010 68**
green	**894 020 55**	**894 020 68**
yellow	**894 030 55**	**894 030 68**
red / green	**894 060 55**	**894 060 68**
red / yellow / green	**894 080 55**	**894 080 68**

ACCESSORIES:

Fixing bracket underneath	**975 894 01**
Adaptor for tube mounting (suitable for Ø 75 mm tubes)	**975 894 02**

ADDITIONAL INFORMATION:

Maximum flexibility

Thanks to the innovative bracket, the direction of the signal can be individually adjusted. After the bracket has been mounted, the customer can adjust the light direction to suit his requirements.

The LED traffic light can be turned through 360 degrees guaranteeing optimum visibility from all angles.



High visibility LED Traffic Light with integrated siren see page 194

TECHNICAL DIAGRAMS:

see page 291

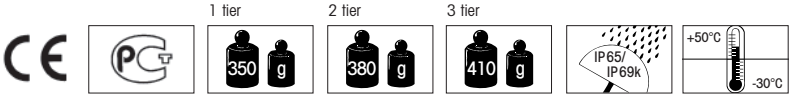

956 LED Bulb BA15d



- Extremely long life duration
- To fit in WERMA Signal towers and signal devices with B15d socket
- Resistant against shock and vibration
- Frontal beam direction
- Optimised lens structure ensures ideal illumination

TECHNICAL SPECIFICATIONS:

Life duration up to 50,000 hrs

Housing:	PA fibreglass, high-impact
Lens:	PC, transparent
Socket:	BA15d
For use with:	200, 203, 206, 209, 210, 213, 216, 219, 220, 223, 641, 805, 840, 846, 850, 851, 852

Slight deviatons in the form of the bulbs are possible.



Suitable for use in Kombi*SIGN* 71

ORDER SPECIFICATIONS:

Voltage	24 V≂	115 V~	230 V~
Current consumption	≤ 45 mA	≤ 15 mA	≤ 15 mA
red	**956 100 75**	**956 100 67**	**956 100 68**
green	**956 200 75**	**956 200 67**	**956 200 68**
yellow	**956 300 75**	**956 300 67**	**956 300 68**
white	**956 400 75**	**956 400 67**	**956 400 68**
blue	**956 500 75**	**956 500 67**	**956 500 68**

TECHNICAL DIAGRAMS:

see page 292

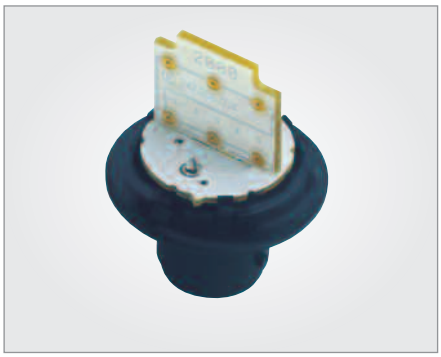

Chip-On-Board technology



Manual grip facility



WERMA SIGNALTECHNIK

956 LED Bulb E27



- **Extremely long life duration**
- **To fit in WERMA Permanent/ Traffic Light Beacon 890**
- **Resistant against shock and vibration**

TECHNICAL SPECIFICATIONS:

Socket:	E27
For use with:	890, 895

Slight deviatons in the form of the bulbs are possible.

ORDER SPECIFICATIONS:

Voltage	24 V≂	115 V~	230 V~
Current consumption	≤ 30 mA	≤ 30 mA	≤ 30 mA
red	**956 120 75**	**956 120 67**	**956 120 68**
green	**956 220 75**	**956 220 67**	**956 220 68**
yellow	**956 320 75**	**956 320 67**	**956 320 68**



Suitable for use in Permanent/Traffic Light Beacons 890 (see page 160)





Bulb Overview

	PART NO.	DESCRIPTION	TOTAL LENGTH(mm)	VOLTAGE	FOR USE WITH:								
	**955 840 34**	Bulb BA15d 5 W	max. 42	12 V	200	203	209	641	800	840	845		
	955 840 35	Bulb BA15d 5 W	max. 42	24 V	200	203	209	641	800	840	845		
	955 840 32	Bulb BA15d 5 W	max. 42	30 V	200	203	209	641	800	840	845		
	955 840 57	Bulb BA15d 5 W	max. 42	115 V	200	203	209	641	800	840	845		
	955 840 38	Bulb BA15d 5 W	max. 42	230 V	200	203	209	641	800	840	845		
	**955 015 34**	Bulb BA15d 7 W	52	12 V	210	213	219	220	480	580	815		850
	955 015 35	Bulb BA15d 7 W	52	24 V	210	213	219	220	480	580	815	826	850
	955 015 36	Bulb BA15d 7 W	52	48 V	210	213	219	220	480	580	815	monit.	850
	955 015 37	Bulb BA15d 7 W	52	115 V	210	213	219	220	480	580	815		850
	955 015 38	Bulb BA15d 7 W	52	230 V	210	213	219	220	480	580	815		850
	**955 826 35**	Bulb BA15d 15 W	45	24 V	826								
	955 826 38	Bulb BA15d 15 W	45	230 V	826								
	**955 827 35**	Bulb BA15d 25 W	55	24 V	827								
	955 827 37	Bulb BA15d 25 W	55	115 V	827								
	955 827 38	Bulb BA15d 25 W	55	230 V	827								
	**955 890 38**	Bulb E14 15 W	76	230 V	890	895							
	**955 880 66**	Bulb E14 40 W	76	48 V	881								
	955 880 67	Bulb E14 40 W	76	115 V	881								
	955 880 68	Bulb E14 40 W	76	230 V	881								

Minimal differences in form are possible within the different bulb models.

	PART NO.	DESCRIPTION	TOTAL LENGTH (mm)	VOLTAGE	FOR USE WITH:					
	**955 890 67** **955 890 68**	Bulb E27 25 W Bulb E27 25 W	100 100	115 V 230 V	890 890	895 895				
	**955 883 34** **955 883 35**	Halogen bulb G 6.35 35 W Halogen bulb G 6.35 35 W	40 40	12 V 24 V	783 783	784 784	883 883	884 884		
	**955 885 24** **955 885 25**	Halogen bulb G 6.35 20 W Halogen bulb G 6.35 20 W	40 40	12 V 24 V	783 783	885 885				
	**955 880 34** **955 880 35**	Halogen bulb H 1 55 W Halogen bulb H 1 70 W	57 57	12 V 24 V	880 880					
	**956 x00 75** **956 x00 67** **956 x00 68** x see page 166	LED bulb BA15d LED bulb BA15d LED bulb BA15d	42 42 42	24 V 115 V 230 V						
	**956 x20 75** **956 x20 67** **956 x20 68** x see page 167	LED bulb E27 LED bulb E27 LED bulb E27	65 65 65	24 V 115 V 230 V	890 890 890	895 895 895				

Minimal differences in form are possible within the different bulb models.



Overview Optical-Audible Signal Devices

LED/Buzzer Combination

150 Installation model



80 dB
Page 196

450 Installation model with acknowledgement funcition



80 dB
Page 197

450 Installation model for AS-Interface



80 dB
Page 198

420 Base mounting



92 dB
Page 174

422 Wall mounting



109 dB
Page 178

LED/Multi-Tone Sounder Combination

420 Base mounting



105 dB
Page 175

422 Wall mounting



109 dB
Page 179

Light/Buzzer Combination

480 Wall Mounting



90 dB
Page 184

Light/Horn Combination

580 Wall Mounting



92 dB
Page 185

LED/Horn Combination

424 Wall Mounting



98 dB
Page 182

Flash/Horn Combination

425 Wall Mounting



98 dB
Page 183

581 Wall Mounting



92 dB
Page 185

Flash/Buzzer Combination

421 Base Mounting



92 dB
Page 176

423 Wall Mounting



92 dB
Page 180

Flash/Multi-Tone Sounder Combination

421 Base Mounting



105 dB
Page 177

423 Wall Mounting



109 dB
Page 181

439 Wall Mounting



105 dB
Page 186

441 Wall Mounting



110 dB
Page 187

442 Wall Mounting



120 dB
Page 188

LED Double Flash/Multi-Tone Sounder Combination

NEW

444 Base, Wall Mounting



114 dB
Page 190

LED EVS/ Multi-Tone Sounder Combination

NEW

444 Base, Wall Mounting



114 dB
Page 191

LED Traffic Light/Siren Combination

494 Wall Mounting 2 and 3 tier



90 dB
Page 193

494 Wall Mounting 1, 2 and 3 tier



90 dB
Page 194

(LED)Traffic Light/Multi-Tone Sounder Combination

NEW

Permanent Beacon 890 with Multi-Tone Sounder 190



110 dB
Page 195

NEW

LED Permanent Beacon 890 with Multi-Tone Sounder 190



110 dB
Page 195

Signal Towers with Audible Element

Kombi*SIGN* 50, 70, 71 with audible element



80-105 dB
Page 199

Surface Housing for Combinations

975 Surface Housings for 1, 2 or 3 products



Page 199

Sounds

The sounds of these products can be played from our website www.werma.com under the heading “Optical-Audible Signal Devices”.

Further information

Further information about the “Audible” theme can be found in the chapter “Tech-Talk” beginning on page 332.

Optical-Audible Signal Devices

Double safety with optical-audible signals

Under certain conditions operational sites with a high or changing noise level require a coloured, optical stimulus in addition to the audible signal. The combination of optical and audible signals leads to greater effectivity as both the eyes and ears are addressed by the sensory stimuli. The combination of an optical and an audible signal rules out the possibility of mistakes or the audible signal being overheard.



Variety of signals

WERMA supplies a large number of audible signals which can also be enhanced with the addition of optical light signals.

AUDIBLE SIGNALS

- Sirens and Multi-Tone Sounders
- (Installation) Buzzers
- Horns

OPTICAL SIGNALS

- LED Permanent Light
- (LED) Flashing Light and
- LED Double Flash Light
- NEW LED EVS Signal

Quick-Finder for Optical-Audible Signal Devices

WERMA provides its customers with a comprehensive selection of Optical-Audible Signal Devices. A range of different light effects and signal tones are available.

With our Quick-Finder you can quickly and easily locate the correct signal device for your application. If you require additional support in selecting a suitable signal device, simply give us a call!

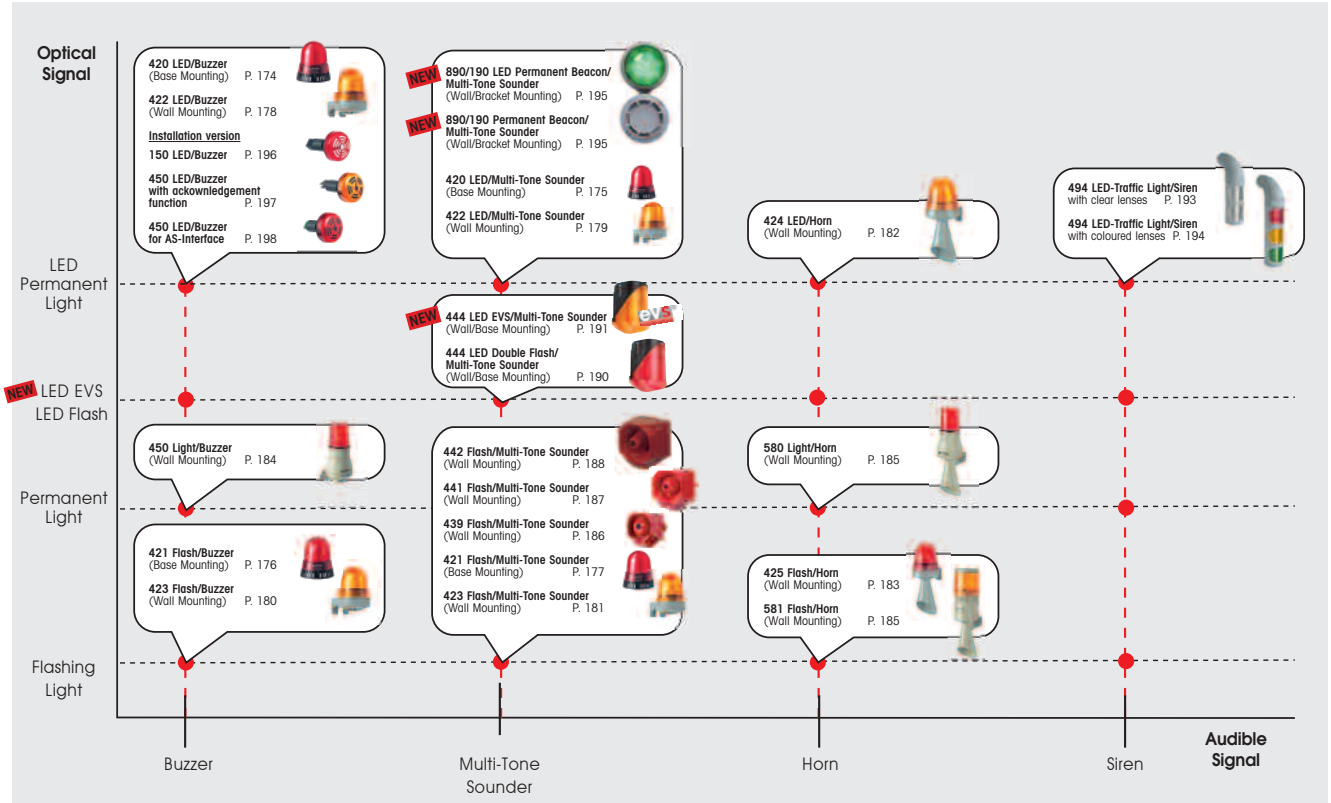

WERMA SIGNALTECHNIK

Comparison of sound output

Play Sound www.werma.com

120 dB

442	Flash/Multi-Tone Sounder Combination	Page 188	

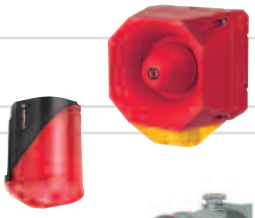

114 dB

NEW 444	LED EVS/Multi-Tone Sounder Combination	Page 191	
444	LED Double Flash/Multi-Tone Sounder Combination	Page 190	

110 dB

441	Flash/Multi-Tone Sounder Combination	Page 187	
NEW 190/890	(LED) Beacon/Multi-Tone Sounder Combination	Page 195	

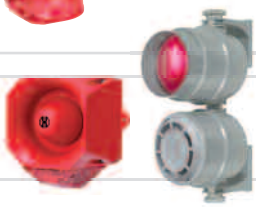

109 dB

422	LED/Multi-Tone Sounder Combination	Page 179	
423	Flash/Multi-Tone Sounder Combination	Page 181	



105 dB

420	LED/Multi-Tone Sounder Combination	Page 175	
421	Flash/Multi-Tone Sounder Combination	Page 177	
439	Flash/Multi-Tone Sounder Combination	Page 186	



100 dB

98 dB

424	LED/Horn Combination	Page 182	
425	Flash/Horn Combination	Page 183	



96 dB

494	LED Traffic Light/Siren Combination	Page 193	
494	LED Beacon/Siren Combination	Page 194	



92 dB

420	LED/Buzzer Combination	Page 174	
421	Flash/Buzzer Combination	Page 176	
422	LED/Buzzer Combination	Page 178	
423	Flash/Buzzer Combination	Page 180	
580	Light/Horn Combination	Page 185	
581	Flash/Horn Combination	Page 185	



90 dB

480	Light/Buzzer Combination	Page 184	



80 dB

150	LED/Buzzer Combination	Page 196	
450	LED/Buzzer Combination with acknowledgement function	Page 197	
450	LED/Buzzer Combination for AS-Interface	Page 198	



Sound output in db (measured at 1 m distance)

420 LED/Buzzer Combination



Base mounting



Tube mounting (accessory)



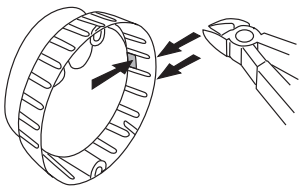

- Buzzer in combination with LED Permanent Beacon
- Long life duration up to 50,000 hrs
- NEW • Adaptor for tube mounting (accessory)
- Optical and audible signals can be triggered separately
- Continuous or pulse tone selectable
- Easy to mount

TECHNICAL SPECIFICATIONS:

Life duration up to 50,000 hrs

Dimensions (Ø x Height):	89 mm x 100.5 mm
Housing:	PC, black
Lens:	PC, transparent
Connection:	Screw terminal with wire protection max. 1.5 mm²
Cable entry:	Cable diameter max. 9 mm
Tone type:	Continuous tone or pulse tone, adjustable 12 V: only continuous tone
Tone frequency:	2.3 kHz
Fixing:	Base mounting, tube mounting (accessory)
Life duration:	Up to 50,000 hrs (LED)

ORDER SPECIFICATIONS:

Play Sound www.werma.com

Voltage	12 V ⎓	24 V ≂	115 V ~	230 V ~
Current consumpt. LED	80 mA	45 mA	25 mA	25 mA
Current consumpt. Buzzer	40 mA	15 mA	15 mA	25 mA
red	**420 110 54**	**420 110 75**	**420 110 67**	**420 110 68**
yellow	**420 310 54**	**420 310 75**	**420 310 67**	**420 310 68**

ACCESSORIES:

NEW Adaptor for tube mounting, plastic, for tube Ø 25 mm	**975 420 01**
Base for tube Ø 25 mm, plastic, incl. rubber seal	**975 840 90**
Base for tube Ø 25 mm, metal, incl. rubber seal	**975 840 91**
Tube Ø 25 mm, all anodized aluminium 100 mm 250 mm	 **975 845 10** **975 840 25**

TECHNICAL DIAGRAMS:

see page 271

420 X10 54 | 24 V

CE VdS PG 110 g IP65 +50°C -20°C 92 dB PLC

WERMA SIGNALTECHNIK

LED/Multi-Tone Sounder Combination



Base mounting



NEW The new adaptor (accessory) allows quick and simple mounting on a tube



Mounting holes integrated into the product rim allow easy mounting without having to remove the lens

- Multi-Tone Sounder in combination with LED Permanent Beacon
- High life duration of up to 50,000 hrs
- Optical and audible signals can be triggered separately
- Choice of 8 different tones
- Easy to mount
- Adjustable sound output
- NEW Adaptor for tube mounting (accessory)

TECHNICAL SPECIFICATIONS:

Life duration up to 50,000 hrs

Dimensions (Ø x Height):	89 mm x 100.5 mm
Housing:	PC black
Lens:	PC, transparent
Connection:	Screw terminal with wire protection max. 1.5 mm²
Cable entry:	Cable diameter max. 9 mm
Fixing:	Base mounting, tube mounting (accessory)
Life duration:	Up to 50,000 hrs (LED)
Tone type:	Selectable, see table below
Tone frequency:	See table below

TONE TYPES AND FREQUENCIES:

Play Sound www.werma.com

Tone No.	Tone type
1	Horn tone (c. 110 Hz)
2	Continuous tone (c. 3.0 KHz)
3	1 Hz tone (c. 3.0 KHz)
4	20 Hz whistle tone (c. 3.0 KHz)
5	800-970 Hz rising @ 1 Hz
6	2400-2850 Hz rising @ 7 Hz
7	1200-500 Hz falling @ 1 Hz
8	Alternating tone 800 Hz / 1200 Hz @ 1Hz

ORDER SPECIFICATIONS:

Voltage	24 V≂
Current consumption LED	45 mA
Current consumption MTS	80 mA
red	**420 120 75**
yellow	**420 320 75**

ACCESSORIES:

Accessories see page 174.

TECHNICAL DIAGRAMS:

see page 271

CE PG 110 g IP65 +50°C -20°C 105 dB 8

Flash/Buzzer Combination



Base mounting



Tube mounting (accessory)



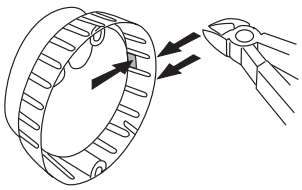

A piece of the rim can be broken out to allow for cable entry from the side

- Buzzer in combination with Xenon Flash
- Optical and audible signal can be triggered separately
- Continuous or pulse tone selectable
- Easy to mount
- NEW • Adaptor for tube mounting (accessory)

TECHNICAL SPECIFICATIONS:

Dimensions (Ø x Height):	89 mm x 100.5 mm
Housing:	PC, black
Lens:	PC, transparent
Connection:	Screwable protection with wire protection max. 1.5 mm²
Cable entry:	Cable diameter max. 9 mm
Tone type:	Continuous or pulse tone, selectable
Tone frequency:	2.3 kHz
Flash energy:	1 Ws
Flash frequency:	1 Hz
Fixing:	Base mounting, tube mounting (accessory)
Life duration:	4 x 10^6 flashes

ORDER SPECIFICATIONS:

Play Sound www.werma.com

Voltage	24 V≂	115 V~	230 V~
Current consumption Flash	120 mA	25 mA	35 mA
Current consumption Buzzer	15 mA	15 mA	25 mA
red	**421 110 75**	**421 110 67**	**421 110 68**
yellow	**421 310 75**	**421 310 67**	**421 310 68**

ACCESSORIES:

NEW Adaptor for tube mounting, plastic, for tube Ø 25 mm	**975 420 01**
Base for tube Ø 25 mm, plastic, incl. rubber seal	**975 840 90**
Base for tube Ø 25 mm, metal, incl. rubber seal	**975 840 91**
Tube Ø 25 mm, all anodized aluminium	
100 mm	**975 845 10**
250 mm	**975 840 25**

TECHNICAL DIAGRAMS:

see page 271

CE PG 120 g IP65 +50°C -20°C 1 Ws 92 dB

WERMA SIGNALTECHNIK

421 Flash/Multi-Tone Sounder Combination



Base mounting



NEW The new adaptor (accessory) allows quick and simple mounting on a tube



Mounting holes integrated into the product rim allow easy mounting without having to remove the lens

- Multi-Tone Sounder in combination with Xenon Flash
- Optical and audible signal can be triggered separately
- Choice of 8 different tones
- Adjustable sound output
- Easy to mount
- NEW Adaptor for tube mounting (accessory)

TECHNICAL SPECIFICATIONS:

Dimensions (Ø x Height):	89 mm x 100.5 mm
Housing:	PC black
Lens:	PC, transparent
Connection:	Screw terminal with wire protection max. 1.5 mm^2
Cable entry:	Cable diameter max. 9 mm
Flash energy:	1 Ws
Flash frequency:	1 Hz
Fixing:	Base mounting, tube mounting (accessory)
Life duration:	4 x 10^6 flashes
Tone type:	Selectable, see table below
Tone frequency:	See table below

TONE TYPES AND FREQUENCIES:

Play Sound www.werma.com

Tone No.	Tone type
1	Horn tone (c. 110 Hz)
2	Continuous tone (c. 3.0 KHz)
3	1 Hz tone (c. 3.0 KHz)
4	20 Hz whistle tone (c. 3.0 KHz)
5	800-970 Hz rising @ 1 Hz
6	2400-2850 Hz rising @ 7 Hz
7	1200-500 Hz falling @ 1 Hz
8	Alternating tone 800 Hz / 1200 Hz @ 1Hz

ORDER SPECIFICATIONS:

Voltage	24 V≂
Current consumption Flash	120 mA
Current consumption MTS	80 mA
red	**421 120 75**
yellow	**421 320 75**

ACCESSORIES:

Accessories see page 176.

TECHNICAL DIAGRAMS:

see page 271

CE VdS

PG | 120 g | IP65 | +50°C -20°C | 105 dB | 1 Ws | 8

422 LED/Buzzer Combination



- Buzzer in combination with LED Permanent Beacon
- Long life duration up to 50,000 hrs
- Integrated mounting bracket
- Optical and audible signal can be triggered separately
- Continuous or pulse tone selectable

Life duration up to 50,000 hrs

TECHNICAL SPECIFICATIONS:

Dimensions (L x H x W):	83 mm x 120.5 mm x 91 mm
Housing:	PC/ABS-Blend; PC grey
Lens:	PC, transparent
Connection:	Screw terminal with wire protection max. 1.5 mm²
Cable entry:	Cable diameter max. 9 mm
Tone type:	Continuous or pulse tone, selectable 12 V: only continuous tone
Tone frequency:	2.3 kHz
Fixing:	Wall mounting, sound outlet facing downwards
Life duration:	Up to 50,000 hrs (LED)

Play Sound www.werma.com

ORDER SPECIFICATIONS:

Voltage	12 V ⎓	24 V ⎓	115 V ~	230 V ~
Current consumption LED	80 mA	45 mA	25 mA	25 mA
Current consumption Buzzer	40 mA	15 mA	15 mA	25 mA
red	**422 110 54**	**422 110 75**	**422 110 67**	**422 110 68**
yellow		**422 310 75**	**422 310 67**	**422 310 68**

TECHNICAL DIAGRAMS:

see page 272

422 X10 54

CE VdS PG 130 g IP65 +50°C -20°C 92 dB

24 V

PLC

422 LED/Multi-Tone Sounder Combination



- Multi-Tone Sounder in combination with LED Permanent Beacon
- Long life duration of up to 50,000 hrs
- Optical and audible signals can be triggered separately
- Integrated mounting bracket
- Choice of 8 different tones
- Easy to mount
- Adjustable sound output

TECHNICAL SPECIFICATIONS:

Life duration up to 50,000 hrs

Dimensions (L x H x W):	83 mm x 120.5 mm x 91 mm
Housing:	PC/ABS-Blend; PC grey
Lens:	PC, transparent
Connection:	Screw terminal with wire protection max. 1.5 mm²
Cable entry:	Cable diameter max. 9 mm
Fixing:	Wall mounting, sound outlet facing downwards
Life duration:	Up to 50,000 hrs (LED)
Tone type:	Selectable, see table below
Tone frequency:	See table below

TONE TYPES AND FREQUENCIES:

Play Sound www.werma.com

Tone No.	Tone type
1	Horn tone (c. 110 Hz)
2	Continuous tone (c. 3.0 KHz)
3	1 Hz tone (c. 3.0 KHz)
4	20 Hz whistle tone (c. 3.0 KHz)
5	800-970 Hz rising @ 1 Hz
6	2400-2850 Hz rising @ 7 Hz
7	1200-500 Hz falling @ 1 Hz
8	Alternating tone 800 Hz / 1200 Hz @ 1Hz

ORDER SPECIFICATIONS:

Voltage	24 V≂
Current consumption LED	45 mA
Current consumption MTS	80 mA
red	**422 120 75**
yellow	**422 320 75**

TECHNICAL DIAGRAMS:

see page 272

CE VdS PG 130 g IP65 +50°C -20°C 109 dB 8

423 Flash/Buzzer Combination



- **Buzzer in combination with Xenon flash**
- **Optical and audible signal can be triggered separately**
- **Integrated mounting bracket**
- **Continuous or pulse tone selectable**

TECHNICAL SPECIFICATIONS:

Dimensions (L x H x W):	83 mm x 120.5 mm x 91 mm
Housing:	PC/ABS-Blend; PC grey
Lens:	PC, transparent
Connection:	Screw terminal with wire protection max. 1.5 mm^2
Cable entry:	Cable diameter max. 9 mm
Tone type:	Continuous or pulse tone, selectable
Tone frequency:	2.3 kHz
Flash energy:	1 Ws
Flash frequency:	1 Hz
Fixing:	Wall mounting, sound outlet facing downwards
Life duration:	4 x 10^6 flashes

ORDER SPECIFICATIONS:

Play Sound www.werma.com

Voltage	24 V ⎓	115 V ~	230 V ~
Current consumption Flash	120 mA	25 mA	35 mA
Current consumption Buzzer	15 mA	15 mA	25 mA
red	**423 110 75**	**423 110 67**	**423 110 68**
yellow	**423 310 75**	**423 310 67**	**423 310 68**

TECHNICAL DIAGRAMS:

see page 272

CE PG 140 g IP65 +50°C -20°C 92 dB 1 Ws

423 Flash/Multi-Tone Sounder Combination



- Multi-Tone Sounder in combination with Xenon Flash
- Optical and audible signal can be triggered separately
- Choice of 8 different tones
- Integrated mounting bracket
- Adjustable sound output

TECHNICAL SPECIFICATIONS:

Dimensions (L x H x W):	83 mm x 120.5 mm x 91 mm
Housing:	PC/ABS-Blend; PC grey
Lens:	PC, transparent
Connection:	Screw terminal with wire protection max. 1.5 mm^2
Cable entry:	Cable diameter max. 9 mm
Flash energy:	1 Ws
Flash frequency:	1 Hz
Fixing:	Wall mounting, sound outlet facing downwards
Life duration:	4 x 10^6 flashes
Tone type:	Selectable, see table below
Tone frequency:	See table below

TONE TYPES AND FREQUENCIES:

Play Sound www.werma.com

Tone No.	Tone type
1	Horn tone (c. 110 Hz)
2	Continuous tone (c. 3.0 KHz)
3	1 Hz tone (c. 3.0 KHz)
4	20 Hz whistle tone (c. 3.0 KHz)
5	800-970 Hz rising @ 1 Hz
6	2400-2850 Hz rising @ 7 Hz
7	1200-500 Hz falling @ 1 Hz
8	Alternating tone 800 Hz / 1200 Hz @ 1Hz

ORDER SPECIFICATIONS:

Voltage	24 V≂
Current consumption Flash	120 mA
Current consumption MTS	80 mA
red	**423 120 75**
yellow	**423 320 75**

TECHNICAL DIAGRAMS:

see page 272

CE VdS

PG | 140 g | IP65 | +50°C -20°C | 109 dB | 1 Ws | 8

424 LED/Horn Combination



- Electronic Horn in combination with LED Permanent Beacon
- Horn with long life duration up to 5,000 hrs
- Optical and audible signal can be triggered separately
- Adjustable sound output (24 V version)

TECHNICAL SPECIFICATIONS:

Life duration up to 50,000 hrs

Dimensions (L x H x W):	83 mm x 234.5 mm x 91 mm
Housing:	PC/ABS-Blend; PC grey
Lens:	PC, transparent
Connection:	Screw terminal with wire protection max. 1.5 mm²
Cable entry:	Cable diameter max. 9 mm
Fixing:	Wall mounting, sound outlet facing downwards
Life duration:	50,000 hrs (LED Permanent light) 5,000 hrs (Horn)
Tone frequency:	110 Hz

ORDER SPECIFICATIONS:

Play Sound www.werma.com

Voltage	24 V≂	115 V~	230 V~
Current consumption LED	45 mA	25 mA	25 mA
Current consumption Horn	80 mA	70 mA	70 mA
red	**424 120 75**	**424 120 67**	**424 120 68**
yellow	**424 320 75**	**424 320 67**	**424 320 68**

TECHNICAL DIAGRAMS:

see page 272

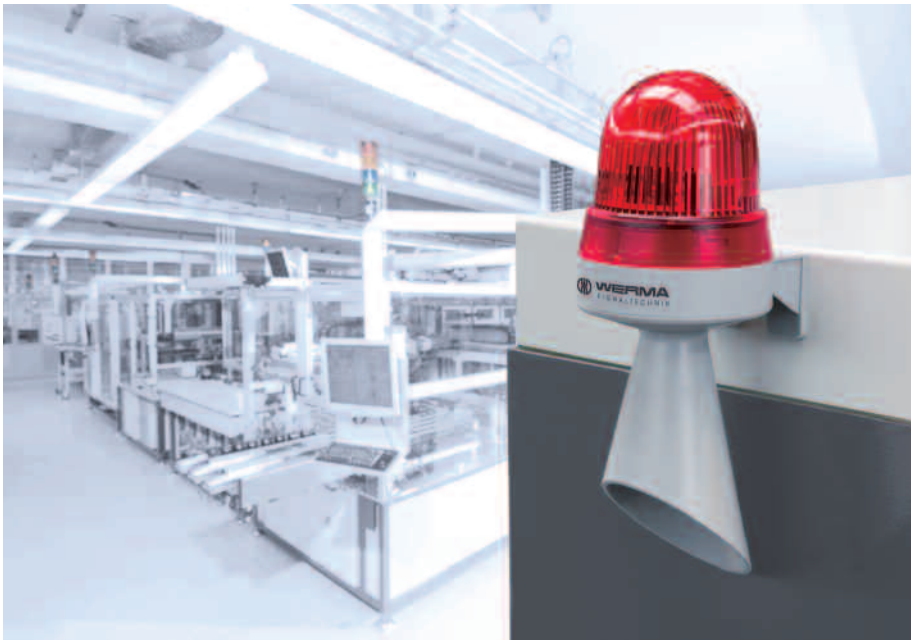

CE PG 170 g IP65 +50°C -20°C 98 dB

425 Flash/Horn Combination



- **Electronic Horn in combination with Xenon Flash**
- **Horn with long life duration of up to 5,000 hrs**
- **Optical and audible signal can be triggered separately**
- **Adjustable sound output (24 V version)**

TECHNICAL SPECIFICATIONS:

Dimensions (L x H x W):	83 mm x 234.5 mm x 91 mm
Housing:	PC/ABS-Blend; PC grey
Lens:	PC, transparent
Connection:	Screw terminal with wire protection max. 1.5 mm^2
Cable entry:	Cable diameter max. 9 mm
Flash energy:	1 Ws
Flash frequency:	1 Hz
Fixing:	Wall mounting, sound outlet facing downwards
Life duration:	4 x 10^6 flashes (Xenon Flash)
	5,000 hrs (Horn)
Tone frequency:	110 Hz

ORDER SPECIFICATIONS:

Play Sound www.werma.com

Voltage	24 V ≂	115 V ~	230 V ~
Current consumption Flash	120 mA	30 mA	30 mA
Current consumption Horn	80 mA	70 mA	70 mA
red	**425 120 75**	**425 120 67**	**425 120 68**
yellow	**425 320 75**	**425 320 67**	**425 320 68**

ADDITIONAL INFORMATION:

424 and 425 Combinations win the design prize „Focus Safety Silver 2007"

In October 2007 the Optical-Audible Combinations 424 and 425 won the design prize "Focus Safety in Silver". Awarded for excellent design, the prize distinguishes products that have attained a leading position due to their exceptional design qualities.

Whilst taking the usual design criteria into consideration, the jury judging the "Focus Safety in Silver 2007" placed special emphasis on the aspects of product safety and functionality.

Awards were given to products where safety plays a central role in design considerations and where the product functionality succeeded in communicating and delivering safety.

Focus Safety Silver 2007

TECHNICAL DIAGRAMS:

see page 272

190 g | IP65 | +50°C -20°C | 98 dB | 1 Ws

480 Light/Buzzer Combination



- **Light and sound can be triggered separately**
- **Integrated mounting bracket**

TECHNICAL SPECIFICATIONS:

Dimensions (L x H x W):	70 mm x 158.5 mm x 77 mm
Housing:	ABS
Lens:	PC, transparent
Socket:	B15d, max. 7 Watt
Connection:	Screw terminal max. 2.5 mm²
Cable entry:	Cable diameter max. 9 mm
Tone frequency:	c. 2400 Hz
Duty cycle:	100 %

Bulb included in assembly. Bulb Overview see pages 168 and 169.

ORDER SPECIFICATIONS:

Play Sound www.werma.com

Voltage	24 V≂	230 V~
Current consumption	320 mA	50 mA
red	**480 152 55**	**480 152 68**
yellow	**480 352 55**	**480 352 68**

Further colours and voltages on request.

ADDITIONAL INFORMATION:

Please also see LED/Buzzer Combination 422 with additional advantages (page 178)

- High protection rating IP 65
- Buzzer in combination with LED
- Long life duration of up to 50,000 hrs
- Continuous and pulse tone selectable

TECHNICAL DIAGRAMS:

see page 274

CE PG 200 g IP33 +50°C -20°C 90 dB

580 Light/Horn Combination



- Light and sound can be triggered separately
- Integrated mounting bracket

TECHNICAL SPECIFICATIONS:

Dimensions (L x H x W):	70 mm x 251 mm x 77 mm
Housing:	ABS
Lens:	PC, transparent
Socket:	B15d, max. 7 Watt
Connection:	Screw terminal max. 2.5 mm²
Cable entry:	Cable diameter max. 9 mm
Duty cycle:	100 %

Bulb included in assembly. Bulb Overview see pages 168 and 169.

ORDER SPECIFICATIONS:

Play Sound www.werma.com

Voltage	24 V ⎓	42 V ~	230 V ~
Current consumption	360 mA	250 mA	50 mA
red	**580 152 55**	**580 152 66**	**580 152 68**
yellow	**580 352 55**		**580 352 68**

Further colours and voltages on request.

TECHNICAL DIAGRAMS: see page 275

CE PG 270 g IP33 +50°C -20°C 92 dB

ADDITIONAL INFORMATION:

Please also see LED/Horn Combination 424 with add. advantages (page 182)

- High protection rating IP 65
- Horn with a life duration of up to 5,000 hrs
- LED Permanent light with a life duration of up to 50,000 hrs

581 Flash/Horn Combination



- Light and sound can be triggered separately
- Integrated mounting bracket

TECHNICAL SPECIFICATIONS:

Dimensions (L x H x W):	70 mm x 292 mm x 77 mm
Housing:	ABS
Lens:	PC, transparent
Connection:	Screw terminal max. 2.5 mm²
Cable entry:	Cable diameter max. 9 mm
Flash frequency:	c. 1 Hz
Flash energy:	2 Ws
Life duration:	4 x 10^6 flashes

ORDER SPECIFICATIONS:

Play Sound www.werma.com

Voltage	12 V ⎓	24 V ⎓	230 V ~
Current consumption	300 mA	200 mA	40 mA
red		**581 152 55**	**581 152 68**
yellow	**581 352 54**	**581 352 55**	**581 352 68**

Further colours and voltages on request.

TECHNICAL DIAGRAMS: see page 276

CE PG 300 g IP33 +50°C -20°C 92 dB 2 Ws

ADDITIONAL INFORMATION:

Please also see Flash/Horn Combination 425 with add. advantages (Page 183)

- High Protection rating IP 65
- Horn with a life duration of up to 5,000 hrs
- Adjustable sound output

439 Flash/Multi-Tone Sounder Combination





- Multi-Tone Sounder in combination with Xenon Flash
- 32 tones for a diverse range of applications
- Adjustable sound output up to 105 dB
- 2 tones can be triggered externally
- Optical and audible signal can be triggered separately

TECHNICAL SPECIFICATIONS:

Dimensions (L x H x W):	136 mm x 138 mm x 119 mm
Housing:	ABS
Connection:	Screw terminal max. 2.5 mm²
Cable entry:	Cable gland M 20 x 1.5 mm (not included in assembly)
Flash frequency:	1 Hz
Flash energy:	1.6 Ws
Tone types and frequencies:	Selectable via DIP switch, see table on page 189

ORDER SPECIFICATIONS:

Play Sound www.werma.com

Voltage	9-60 V ⎓	110-230 V ~
Current consumption	230 mA (24 V)	30 mA (230 V)
Housing / Flash		
red / red	**439 010 55**	**439 010 68**
red / yellow	**439 030 55**	**439 030 68**
grey / red	**439 110 55**	**439 110 68**
grey / yellow	**439 130 55**	**439 130 68**

ACCESSORIES:

Cable gland M 20 x 1.5 mm	**975 444 01**

TONE TYPES AND FREQUENCIES:

Tone table see page 221.
Variances possible. For further details see www.werma.com.

TECHNICAL DIAGRAMS:

see page 273



Multi-Tone Sounder in combination with a powerful Xenon Flash

Size comparison



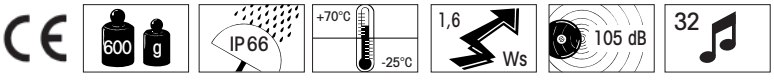

WERMA SIGNALTECHNIK

441 Flash/Multi-Tone Sounder Combination





- Multi-Tone Sounder in Combination with Xenon Flash
- 32 tones for a diverse range of applications
- Adjustable sound output up to 110 dB
- 2 tones can be triggered externally
- Optical and audible signal can be triggered separately

TECHNICAL SPECIFICATIONS:

Dimensions (L x H x W):	165 mm x 169 mm x 132 mm
Housing:	PC/ABS-Blend
Connection:	Screw terminal max. 2.5 mm²
Cable entry:	Cable gland M 20 x 1.5 mm (not included in assembly)
Flash frequency:	1 Hz
Flash energy:	2.5 Ws
Tone types and frequencies:	Selectable via DIP switch, see table on page 189

ORDER SPECIFICATIONS:

Play Sound www.werma.com

Voltage	9-60 V ⎓	230 V ~
Current consumption	230 mA	35 mA
Housing / Flash		
red / red	**441 010 55**	**441 010 68**
red / yellow	**441 030 55**	**441 030 68**
grey / red	**441 110 55**	**441 110 68**
grey / yellow	**441 130 55**	**441 130 68**

Cable gland M 20 x 1.5 mm	**975 444 01**

TONE TYPES AND FREQUENCIES:

Tone table see page 221.
Variances possible. For further details see www.werma.com.

TECHNICAL DIAGRAMS:

see page 273

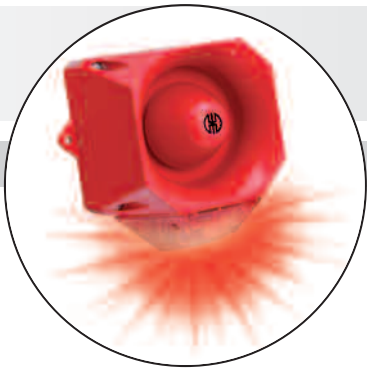

Multi-Tone Sounder in combination with a powerful Xenon Flash

Size comparison

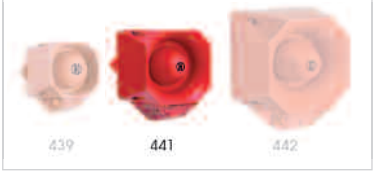

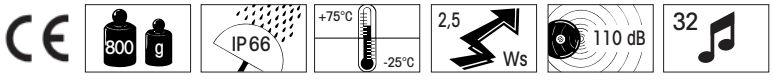

442 Flash/Multi-Tone Sounder Combination





- Multi-Tone Sounder in combination with Xenon Flash
- 4 different flash frequencies (24 V Version)
- 42 tones for a diverse range of applications
- Adjustable sound output up to 120 dB
- 3 tones can be triggered externally
- Duration of signal phase selectable
- Optical and audible signal can be triggered separately

TECHNICAL SPECIFICATIONS:

Dimensions (L x H x W):	168 mm x 211 mm x 155 mm
Housing:	PC/ABS-Blend
Connection:	Screw terminal max. 2.5 mm²
Cable entry:	Cable gland M 20 x 1.5 mm (not included in assembly)
Tone types and frequencies:	Selectable via DIP switch, see table on the right

ORDER SPECIFICATIONS:

Play Sound www.werma.com

Voltage	18-30 V ⎓	115/230 V ~	
Current cons. Multi Tone Sounder	450 mA	130 / 65 mA	
Current consumption Flash	127 - 389 mA (dependent on voltage and flash frequency)	– / 15 mA	(dependent on voltage and flash frequency)
Flash frequency	0,75 Hz/1 Hz	1,25 Hz/2 Hz	1 Hz (Flash can only be operated with 230 V)
Flash energy	3,5 Ws	2 Ws	2 Ws
Housing/Flash			
red/red	**442 010 55**		**442 010 68**
red/yellow	**442 030 55**		**442 030 68**
grey/red	**442 110 55**		**442 110 68**
grey/yellow	**442 130 55**		**442 130 68**

ACCESSORIES:

Cable gland M 20 x 1.5 mm	**975 444 01**

TECHNICAL DIAGRAMS:

see page 273

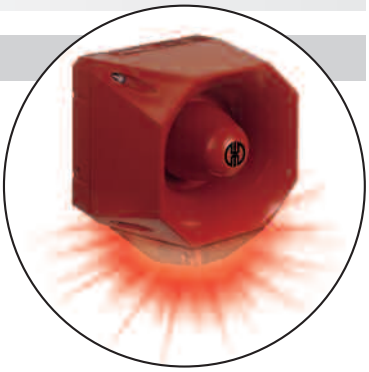

Loud Multi-Tone Sounder in combination with a powerful Xenon Flash.

Size comparison



442 XX0 55 | 442 XX0 68

2,0 Kg | 2,2 Kg | IP 66 | +75°C -25°C | 120 dB | 2/3,5 Ws | 42

WERMA SIGNALTECHNIK

The Flash/Multi-Tone Sounder Combination 442 offers a large choice of international signal tones for the widest spectrum of applications. 3 tones can be triggered externally. The first two tones can be freely chosen. The third tone is paired with the second tone. See tone table.

TONE TYPES AND FREQUENCIES:



Tone 1+2 No	Tone type	Use	Output (dBA)	Tone 3
1	alternating 800/970 Hz in 2 Hz stroke (250 ms-250 ms)		120	14
2	rising 800/970 Hz in 7 Hz stroke (7/s)		120	14
3	rising 800/970 Hz in 1 Hz stroke (1/s)		120	14
4	continuous 2,850 Hz		111	9
5	rising 2,400-2,850 Hz in 7 Hz stroke		109	4
6	rising 2,400-2,850 Hz in 1 Hz stroke		110	4
7	500-1,200 Hz rising in 3 sec., 0.5 sec. OFF	Slow Whoop Holland	119	14
8	falling 1,200-500 Hz in 1 Hz stroke	DIN/PFEER (PAPA), DIN 33404-3, VDS tested	119	14
9	alternating 2,400/2,850 Hz in 2 Hz stroke (250 ms-250 ms)		113	4
10	pulse 970 Hz in 0,5 Hz stroke (1 sec. ON / 1 sec. OFF)	PFEER Alarm	117	14
11	alternating 800/970 Hz in 1 Hz stroke (500 ms-500 ms)		118	14
12	pulse 2,850 Hz in 0.5 Hz stroke (1 sec. ON / 1 sec. OFF)		112	4
13	970 Hz pulse: 0.25 sec. ON / 1 sec. OFF		117	14
14	continuous 970 Hz	PFEER - Toxic gas	118	8
15	554 Hz/100 ms alternating 440 Hz/400 ms	French alarm signal AFNOR NFS 32S 32-001	115	14
16	660 Hz pulse: 150 ms ON, 150 ms. OFF	Swedish alarm signal	114	14
17	660 Hz pulse: 1.8 sec. ON, 1.8 sec. OFF	Swedish alarm signal	115	14
18	660 Hz pulse: 6.5 sec. ON, 13 sec. OFF	Swedish alarm signal	115	14
19	continuous 660 Hz	Swedish alarm signal	116	1
20	alternating 554/440 Hz in 0.5 Hz stroke (1 sec. ON / 1 sec. OFF)	Swedish alarm signal	115	19
21	pulse 660 Hz in 1 Hz stroke (500 ms-500 ms)	Swedish alarm signal	115	4
22	pulse 2,850 Hz in 4 Hz stroke (150 ms ON / 100 ms OFF)		110	4
23	rising 800-970 Hz in 50 Hz stroke		117	14
24	rising 2,400-2,850 Hz in 50 Hz stroke		110	4
25	970 Hz puls.: 3 x 500 ms. ON, 500 ms OFF, break 1.5 sec.	ISO 8201 / US Temporal	118	14
26	2,850 Hz puls.: 3 x 500 ms. ON, 500 ms OFF, break 1.5 sec.	ISO 8201 / US Temporal	112	4
27	continuous 4,000 Hz		105	6
28	alternating 800/970 Hz in 2 Hz stroke (250 ms-250 ms)		118	14
29	alternating 990/650 Hz in 2 Hz stroke (250 ms-250 ms)		117	14
30	alternating 510/610 Hz in 2 Hz stroke (250 ms-250 ms)		116	14
31	rising 300-1,200 Hz in 1 Hz stroke		118	14
32	continuous Bell		117	3
33	continuous Bell: 3x500 ms. Pulse, 1.5 sec. Silence, then repeat	Bell / US Temporal	117	14
34	alternating 1,000/2,000 Hz in 1 Hz stroke (500 ms-500 ms)	Singapore	115	4
35	pulse 420 Hz (0,625 sec.)	Australian alarm signal	118	14
36	500-1,200 Hz rising in 3.75 sec., then 0,25 sec. OFF	Australian alarm signal (Evacuation)	117	14
37	rising 1,400-1,600 Hz in 1 sec., falling in 0.5 sec.	NF C 48-265	116	14
38	500-1,200 Hz rising and falling in 3 sec.	Siren	117	14
39	pulse 720 Hz: 0.7 sec. ON, 0.3 sec. OFF	German industrial alarm	118	14
40	rising 422-775 Hz in 0.85 sec., 1 sec. silence, then repeat	NFPA Whoop	118	14
41	continuous 470 Hz	Horn (USA)	114	3
42	continuous 370 Hz	Air Horn (USA)	113	3

444 LED Double Flash/ Multi-Tone Sounder Combination



Base mounting



Wall mounting

- Multi-Tone Sounder in combination with LED Double Flash
- Sound output adjustable up to 114 dB
- 32 tones for a diverse range of applications
- 3 Tones can be triggered externally
- Optical and audible signal can be triggered separately

TECHNICAL SPECIFICATIONS:

Life duration up to 50,000 hrs

Dimensions (L x H x W):	109 mm x 113 mm x 152 mm
Housing:	PC/ABS-Blend
Lens:	PC, transparent
Connection:	Screw terminal with wire protection max. 1.5 mm²
Cable entry:	Membrane for cable diameter max. 13 mm
Fixing:	Wall, base and ceiling mounting
Life duration:	Up to 50,000 hrs (LED Double Flash)
Flash frequency:	c. 1 Hz
Tone types and frequencies:	Selectable via DIP switch, see table on page 192

ORDER SPECIFICATIONS:

Play Sound www.werma.com

Voltage		24 V⎓	115 V~	230 V~
Current consumption	Optical	60 mA	30 mA	30 mA
	Audible	200 mA	55 mA	30 mA
red		**444 100 75**	**444 100 67**	**444 100 68**
yellow		**444 300 75**	**444 300 67**	**444 300 68**

ACCESSORIES:

Cable gland M 20 x 1.5 mm (for cable strain relief) Protection rating IP 65 is provided even without cable gland	**975 444 01**

TONE TYPES AND FREQUENCIES:

Selectable via DIP switch, see tone table on page 192.

QUICK AND SIMPLE MOUNTING

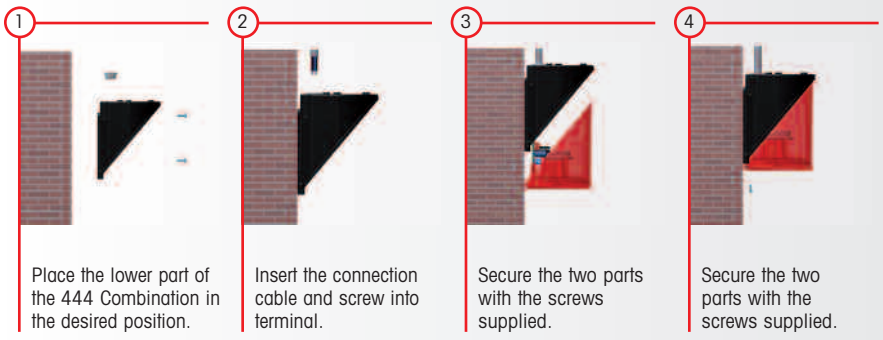

TECHNICAL DIAGRAMS: see page 273

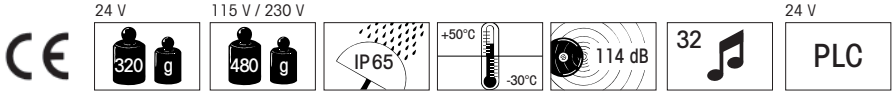

WERMA SIGNALTECHNIK

LED EVS/Multi-Tone Sounder Combination



Base mounting



The „EVS“ light effect ensures a maximum attention-grabbing effect

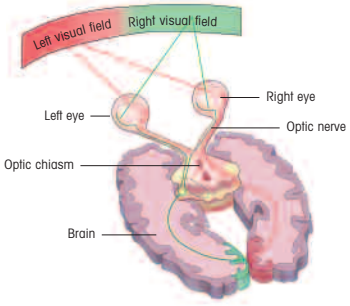

The way in which the brain processes visual stimuli formed the basis for the development of the EVS technology

- **Multi-Tone Sounder in combination with LED EVS* signal**
- **Random sequence of light signals prevents acclimatisation effect**
- **32 tones for a diverse range of applications**
- **Sound output adjustable up to 114 dB**
- **3 tones can be triggered externally**
- **Optical and audible signal can be triggered separately**

TECHNICAL SPECIFICATIONS:

Life duration up to 50,000 hrs

Dimensions (L x H x W):	109 mm x 113 mm x 152 mm
Housing:	PC/ABS-Blend
Lens:	PC, transparent
Connection:	Screw terminal with wire protection max. 2.5 mm²
Cable entry:	Membrane for cable diamter max. 13 mm
Fixing:	Wall, base and ceiling mounting
Life duration:	Up to 50,000 hrs (LED EVS)
Tone types and frequencies:	Selectable via DIP switch, see table on page 192

ORDER SPECIFICATIONS:

Play Sound www.werma.com

		24 V ⎓	115 V ~	230 V ~
Voltage				
Current consumption	Optical	60 mA	30 mA	30 mA
	Audible	200 mA	55 mA	30 mA
red		**444 110 75**	**444 110 67**	**444 110 68**
yellow		**444 310 75**	**444 310 67**	**444 310 68**

ACCESSORIES:

Cable gland M 20 x 1.5 mm (for cable strain relief) **975 444 01**
Protection rating IP 65 is provided even without cable gland

TONE TYPES AND FREQUENCIES:

Selectable via DIP switch, see tone table on page 192.

ADDITIONAL INFORMATION:

*** EVS** = Enhanced Visibility System or Enhanced Visibility System.
Further informationen can be found in the chapter "Tech-Talk" beginning on page 326.

TECHNICAL DIAGRAMS:

see page 273

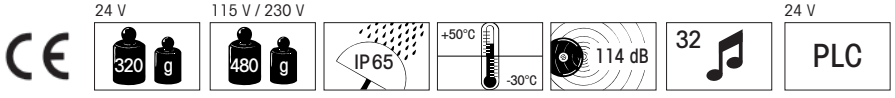

444 Combination

The 444 Combinations (Page 190 + 191) offer a large choice of international signal tones for the widest spectrum of applications. 3 tones can be triggered externally.

TONE TYPES AND FREQUENCIES:

Play Sound www.werma.com

Tone 1	Tone type	Frequency	Description	Use	Tone 2	Tone 3
1	continuous	200		BS 5839-1:2002, VDS	440 Hz cont.	554 Hz cont.
2	rising	800 & 970	7 Hz		14	800 Hz cont.
3	rising	800 & 970	1 Hz		14	800 Hz cont.
4	continuous	2850			14	9
5	rising	2400 to 2850	7 Hz	VDS	4	2400 Hz cont.
6	rising	2400 to 2850	1 Hz		4	2400 Hz cont.
7	rising	500 to 1200	3 s, then 0.5s OFF (then repeat)		14	8
8	falling	1200 to 500	1 Hz	VDS	14	7
9	alternating	2400 & 2850	2 Hz		4	2400 Hz cont.
10	pulse	970	0.5 Hz (1s On/1s Off)	BS 5839 Part 1 1988	14	800 Hz cont.
11	alternating	800 & 970	1 Hz	BS 5839 Part 1 1988	14	800 Hz cont.
12	pulse	2850	0. Hz		4	22
13	pulse	970		0,25s On/1s Off	14	800 Hz cont.
14	continuous	970		BS 5839-1: 2002 PFEER - Toxic gas	10	8
15	alternating	554 & 440		France NFS	14	800 Hz cont.
16	pulse	660	150 ms On / 150 ms Off	Swedish	16	14
17	pulse	660	1.8s On / 1.8s Off	Swedish	17	14
18	pulse	660	6.5s On / 13s Off	Swedish	18	14
19	continuous	660		Swedish	19	31
20	alternating	554 & 440	0.5 Hz		20	19
21	pulse	660	1 Hz	Swedish	21	4
22	pulse	2850	150 ms On / 100 ms Off	GB	14	4
23	rising	800 to 970	50 Hz (low)	BS 5839 Part 1 1988	14	800 Hz cont.
24	rising	2400 to 2850	50 Hz (high)		4	2400 Hz cont.
25	pulse	970	3 x 500 ms ON / 500ms OFF / 1.5s silence, then repeat (low)	ISO 8201 US Temporal	26	14
26	pulse	2850	3 x 500 ms ON / 500 ms OFF / 1.5s silence, then repeat (high)	ISO 8201 US Temporal	25	4
27	continuous	4000			27	6
28	rising	2000 to 2850	7 Hz		2000 Hz cont.	4
29	alternating	988 & 645	2 Hz		988 Hz cont.	645 Hz cont.
30	alternating	510 & 610	2 Hz		510 Hz cont.	610 Hz cont.
31	alternating	800 & 970	2 Hz	5839-1:2002	800 cont.	14
32	alternating	800 & 1200	1 Hz		800 cont.	1200 Hz cont.

LED Traffic Light / Siren Combination



LED Traffic Light with integrated siren (2 tier)



Integrated siren with high sound output



Clear lenses ensure signalling effect even in direct sunlight

- High visibility LED Traffic Light with independently triggerable integrated siren
- Award-winning design
- Unmistakable signalling even in direct sunlight thanks to clear lenses
- Sound output of 90 dB
- Simple mounting due to integrated mounting bracket
- The optical signal also offers very good sideway visibility
- NEW • Protection rating IP 65/IP 69k

Life duration up to 50,000 hrs

TECHNICAL SPECIFICATIONS:

Dimensions (L x H x W):	2 tier: 85 mm x 309 mm x 136 mm 3 tier: 85 mm x 394 mm x 136 mm
Housing:	PC/ABS, grey
Lens:	PC, transparent
Fixing:	Wall mounting, tube mounting (accessory)
Installation position:	Vertical/hanging
Connection:	Screw terminal with wire protection max. 1.5 mm²
Cable entry:	Cable diameter max. 13 mm
Duty cycle:	100 %
Tone type:	Continuous tone

ORDER SPECIFICATIONS:

Play Sound www.werma.com

Voltage		24 V ⎓	115 to 230 V ~
Current Consumption	LED	60 mA (red/yellow) 120 mA (green)	30 mA per tier at 230 V/50 Hz
	Siren	20 mA	30 mA at 230 V/50 Hz
red / green		**494 160 55**	**494 160 68**
red / yellow / green		**494 180 55**	**494 180 68**

ACCESSORIES:

NEW Adaptor for tube mounting **975 894 02**
(suitable for Ø 75 mm tubes, see page 194)

ADDITIONAL INFORMATION:

"Small Traffic Light Series" wins "iF product design award 2009"

WERMA has won the prestigious "iF product design award" for the design and production of its "small traffic light series". Since its introduction in 1953, this design prize has been an enduring, renowned hallmark for "excellent" design.



TECHNICAL DIAGRAMS:

see page 274

2 tier 380 g | 3 tier 410 g | IP65/IP69k | +50°C / -30°C | 90 dB

LED Beacon / Siren Combination



product design award 2009

LED Beacon with integrated Siren (1 tier)

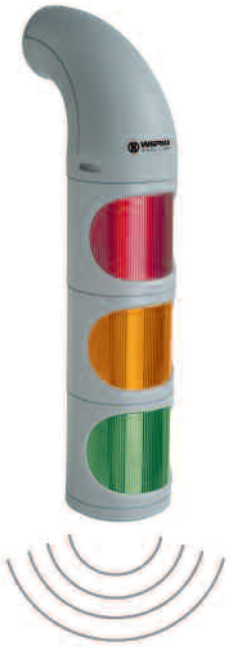

Integrated siren with high sound output



NEW The new adaptor (accessory) allows quick and simple mounting on tubes (Ø 75 mm)

- High visibility LED Traffic Light with independently triggerable integrated siren
- Colour intensive light effect thanks to LEDs in the same colour as the lenses
- Sound output of 90 dB
- Simple mounting due to integrated mounting bracket
- The optical signal also offers very good sideway visibility
- NEW Protection rating IP 65/IP 69k

TECHNICAL SPECIFICATIONS:

Life duration up to 50,000 hrs

Dimensions (L x H x W):	1 tier:	85 mm x 224 mm x 136 mm
	2 tier:	85 mm x 309 mm x 136 mm
	3 tier:	85 mm x 394 mm x 136 mm
Housing:	PC/ABS, grey	
Lens:	PC, transparent	
Fixing:	Wall mounting	
Installation position:	Vertical/hanging	
Connection:	Screw terminal with wire protection max. 1.5 mm²	
Cable entry:	Cable diameter max. 13 mm	
Duty cycle:	100 %	
Tone type:	Continuous tone	

ORDER SPECIFICATIONS:

Play Sound www.werma.com

Voltage		24 V ⎓	115 to 230 V ~
Current Consumption	LED	60 mA (red/yellow) 120 mA (green)	30 mA per tier at 230 V/50 Hz
	Siren	20 mA	30 mA at 230 V/50 Hz
red		**494 010 55**	**494 010 68**
green		**494 020 55**	**494 020 68**
yellow		**494 030 55**	**494 030 68**
red / green		**494 060 55**	**494 060 68**
red / yellow / green		**494 080 55**	**494 080 68**

ACCESSORIES:

NEW Adaptor for tube mounting (suitable for Ø 75 mm tubes)	**975 894 02**

ADDITIONAL INFORMATION:

Maximum flexibility

Thanks to the innovative bracket, the direction of the signal can be individually adjusted. After the bracket has been mounted, the customer can adjust the direction to suit his requirements.

The LED traffic light can be turned through 360 degrees guaranteeing optimum visibility from all angles.



The direction of the optical signal can be individually adjusted

TECHNICAL DIAGRAMS:

see page 274

1 tier 350 g | 2 tier 380 g | 3 tier 410 g | IP65/IP69K | +50°C -30°C | 90 dB

WERMA SIGNALTECHNIK

890/190

(LED) Beacon 890/Multi-Tone Sounder 190 Combination



Light intensive and loud traffic light combination



The fixing bracket can be mounted pointing inwards or outwards (accessory)

- **32 tones for a diverse range of applications**
- **Sound output adjustable up to 110 dB**
- **3 tones can be triggered externally**
- **Fixing bracket for easy combination with (LED) Permanent Beacon/ Traffic Light 890**

TECHNICAL SPECIFICATIONS:

Dimensions (Ø x Height):	150 mm x 154 mm (890) 150 mm x 127 mm (190)
Housing:	PC/ABS-Blend, grey
Lens:	PC, transparent
Fixing:	Base mounting, fixing bracket (accessory)
Connection:	Screw terminal
Cable entry:	From top or bottom with cable gland M 20 x 1.5 mm or from the back with rubber grommet Ø 6-12 mm, included in assembly
Tone types and frequencies:	Selectable via DIP switch, see table on page 229

ORDER SPECIFICATIONS:

Play Sound www.werma.com

Multi-Tone Sounder 190			
Voltage	10-30 V ⎓	115 V ~	230 V ~
Current consumption	< 180 mA	< 55 mA	< 30 mA
grey	**190 000 55**	**190 000 67**	**190 000 68**
LED Beacon 890			
Voltage	12-24 V ⎓	115 V ~	230 V ~
Current consumption	< 200 mA	< 35 mA	< 35 mA
red	**890 120 55**	**890 120 67**	**890 120 68**
green	**890 220 55**	**890 220 67**	**890 220 68**
yellow	**890 320 55**	**890 320 67**	**890 220 68**

Permanent Beacon 890	
Voltage	12-240 V ≂
red	**890 100 00**
green	**890 200 00**
yellow	**890 300 00**
clear	**890 400 00**
blue	**890 500 00**

ACCESSORIES:

Fixing bracket, tube adaptor and connecting grommet see page 161.

TONE TYPES AND FREQUENCIES:

Selectable via DIP switch, see tone table on page 229.

TECHNICAL DIAGRAMS:

see page 269 + 291

CE IP65 +50°C -30°C 110 dB 32 PLC

150 LED/Buzzer Combination





- **LED Permanent light**
- **Continuous tone can be additionally activated**
- **Simple connection by means of connector plug**
- **Life duration up to 50,000 hrs**

Life duration up to 50,000 hrs

TECHNICAL SPECIFICATIONS:

Dimensions (Ø x Height):	50 mm x 22 mm (Protrusion from panel)
Housing:	PC/ABS-Blend
Lens:	PC, transparent
Connection:	Connector plug with screw terminal max. 1.5 mm²
Tone type:	Continuous
Tone frequency:	c. 2.8 kHz
Duty cycle:	100 %
Life duration:	Up to 50,000 hrs (LED)
Fixing:	Installation mounting for Ø 22.5 mm (M 22 x 1.5 mm) with anti-twist device

Nut and seal included in assembly.

ORDER SPECIFICATIONS:

Play Sound www.werma.com

Voltage	24 V ⎓	115 V ~	230 V ~
Current consumption	< 50 mA	< 20 mA	< 20 mA
red	**150 100 55**	**150 100 67**	**150 100 68**
yellow	**150 300 55**	**150 300 67**	**150 300 68**

TECHNICAL DIAGRAMS:

see page 268

24 V

PLC

WERMA SIGNALTECHNIK

450

LED/Buzzer Combination with acknowledgement function



- LED permanent light with additional continuous tone
- Silence the audible signal by lightly pressing the frontal area
- Life duration up to 50,000 hrs
- Potential-free output for transmission of the acknowledgement signal to the control unit
- Positive and negative logic



TECHNICAL SPECIFICATIONS:

Life duration up to 50,000 hrs

Dimensions (Diameter x Height):	50 mm x 22 mm (Protrusion from panel)
Housing:	PC/ABS-Blend
Lens:	PC, transparent
Connection:	Screw terminal max. 0.5 mm²
Signal input:	24 V ⎓
Acknowledgement output:	Semiconductor-Relay U_{max} = 30 V I_{max} = 100 mA $R_{ON\ max}$ = 25 Ohm
Tone type:	Continuous
Tone frequency:	c. 2.8 kHz
Duty cycle:	100 %
Life duration:	Up to 50,000 hrs (LED)
Fixing:	Installation mounting for Ø 22,5 mm (M 22 x 1.5 mm) with anti-twist device

Nut and seal included in assembly.



The audible signal can be turned off in seconds by lightly pressing the front of the product

ORDER SPECIFICATIONS:

Play Sound www.werma.com

Voltage	24 V ⎓
Current consumption	40-80 mA
red	**450 100 55**
yellow	**450 300 55**

ADDITIONAL INFORMATION:

1



The occurrence of a malfunction or an error is indicated by means of an optical-audible signal.

2

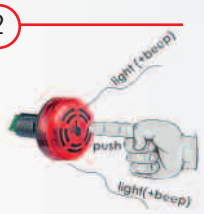

The audible signal can be turned off in seconds by lightly pressing the front of the product.

3



The acknowledgement signal is sent to the control unit via an electronic switch and the malfunction is now only indicated by the optical signal.

TECHNICAL DIAGRAMS:

see page 273

c UL us CE PG 35 g IP65 +50°C -20°C 80 dB PLC

450 LED/Buzzer Combination with acknowledgement function for AS-Interface





- **LED Permanent light with additional continuous tone**
- **Silence the audible signal by lightly pressing the frontal area**
- **Acknowledgement signal fed back to the Master via AS-Interface Bus**
- **Life duration up to 50,000 hrs**

Life duration up to 50,000 hrs

TECHNICAL SPECIFICATIONS:

Dimensions (Ø x Height):	50 mm x 22 mm (Protrusion from panel)
Housing:	PC, black
Lens:	PC, transparent
Connection:	Screw terminal with wire protection max. 1.5 mm^2
Power supply AS-Interface:	Via bus conduction
Operating voltage:	25 V ... 31.6 V according to the AS-Interface specification
IO-Code:	B_{hex}
ID-Code:	A_{hex}
ID2-Code:	E_{hex}
Tone type:	Continuous
Tone frequency:	c. 2.8 kHz
Duty cycle:	100 %
Fixing:	Installation mounting for Ø 22.5 mm (M 22 x 1.5 mm) with anti-twist device

Nut and seal included in assembly.

ORDER SPECIFICATIONS:

Play Sound www.werma.com

Voltage	via AS-Interface
Current consumption	≤ 80 mA
red	**450 110 55**
yellow	**450 310 55**

ADDITIONAL INFORMATION:

Unique acknowledgement function with feedback signal via AS-Interface Bus

The addition of the LED/Buzzer Combination 450 with acknowledgement function expands WERMA's range of products with integrated AS-Interface®. The combination unites a very bright light signal with the powerful sound of a buzzer.

This product also features a unique acknowledgement function: by gently pressing the front surface of the product the audible signal can be turned off in a matter of seconds (see page 197). This acknowledgement signal is fed back to the master via the AS-Interface Bus and the malfunction is only indicated by means of the optical signal.

Expanded addressing and a sound output of 80 dB

The 450 Combination for AS-Interface enables an expanded addressing (A/B technology) of up to 62 modules. The power required is drawn from the Bus voltage.

TECHNICAL DIAGRAMS:

see page 273

Class 2

Approval No. 78701 | 35 g | IP65 | +50°C -20°C | 80 dB | PLC

WERMA SIGNALTECHNIK

975 Surface Housing for Combinations



Surface housing double



Surface housing single

- Various combinations possible
- High protection rating IP 65
- Versatile range of applications thanks to cable exit at side

TECHNICAL SPECIFICATIONS:

Dimensions (W x H x D):	single:	80.5 mm x 55 mm x 82 mm
	double:	160 mm x 55 mm x 78 mm
	triple:	240 mm x 60 mm x 80 mm
Housing:	ABS and PC/ABS-Blend	
Cable entry:	Cable gland M 16 x 1.5 mm for circular cable Ø 5-10 mm	

ORDER SPECIFICATIONS:

Single surface housing	**975 109 02**
Double surface housing for 1 beacon und 1 audible element	**975 109 03**
Triple surface housing for 2 beacons und 1 audible element	**975 109 04**

Assembly comprises of only the surface housing. Beacons 800-802, 815-817 (p. 92/94) and audible elements 109 and 110 (pages 205/206) have to be ordered additionally.

TECHNICAL DIAGRAMS: see page 295

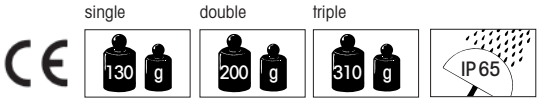

Signal Tower with Audible Element





- Signal Tower Kombi*SIGN* with audible signal device
- Sound output up to 105 dB
- Can be combined with all optical elements
- Can be triggered separately

TECHNICAL SPECIFICATIONS:

Dimensions (Ø x Height):	See Kombi*SIGN* 50, 70 and 71	
Housing:	Polyamid, high-impact, black	
Lens:	Polycarbonate transparent	
Fixing:	Base mounting, bracket mounting, tube mounting	
Socket:	Bayonet, B15d for bulb max. 7 Watt	
Connection:	Screw terminal M3	
Seal:	Pre-mounted with each element	
Number of modules possible:	Kombi*SIGN* 70 and 71:	max. 5
	With 2-sided bracket:	max. 10
	Kombi*SIGN* 50:	max. 4
	The audible element is to be mounted at the top of the signal tower.	

ORDER SPECIFICATIONS: see Kombi*SIGN* 50, 70 and 71 (P. 54 + 36 + 16 onwards)

TECHNICAL DIAGRAMS: see Pages 286 + 285 + 277

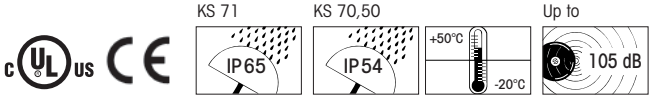


WERMA
SIGNALTECHNIK
584 000 75
24V= IP65 Ta50°C

Overview Audible Signal Devices

Electronic Buzzers

Electromechanical Buzzers

107 Installation Buzzer

80 dB
Page 204

109 Installation Buzzer

80 dB
Page 205

114 Installation Buzzer

85 dB
Page 207

118 Installation Buzzer

90 dB
Page 208

119 Installation Buzzer

90 dB
Page 208

338 AC Installation Buzzer

65-75 dB
Page 209

382 Installation Buzzer

90 dB
Page 210

118 483 Buzzer
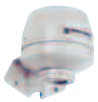
90 dB
Page 211

119 483 Buzzer
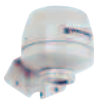
90 dB
Page 211

127 Buzzer

92 dB
Page 212

128 Buzzer

92 dB
Page 213

Sirens and Multi-Tone Sounders

Play Sound www.werma.com

123 Electronic Siren

105 dB
Page 214

110 Installation Multi-Tone Sounder

100 dB
Page 206

126 Multi-Tone Sounder

105 dB
Page 215

129 Multi-Tone Sounder

110 dB
Page 218

133 Multi-Tone Sounder

105 dB
Page 216

134 Multi-Tone Sounder

109 dB
Page 217

140 Multi-Tone Sounder

100/110 dB
Page 220

139 Multi-Tone Sounder

105 dB
Page 222

141 Multi-Tone Sounder
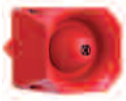
110 dB
Page 223

142 Multi-Tone Sounder

120 dB
Page 224

144 Multi-Tone Sounder

114 dB
Page 226

NEW
190 Multi-Tone Sounder

110 dB
Page 228

Signal Horns

Three-Tone Gong

Alarm Bell

584

98 dB
Page 230

585

98 dB
Page 231

482

83/92 dB
Page 232

582

92 dB
Page 233

170

100 dB
Page 238

172

100 dB
Page 237

914

98 dB
Page 239

570

108 dB
Page 234

571

108 dB
Page 235

572

104 dB
Page 235

573

105 dB
Page 236

Sounds and Further Information

The sounds of these products can be played from our website www.werma.com under the heading "Audible Signal Devices".

Further information about the "Audible" theme can be found in the chapter "Tech-Talk" beginning on page 332.

A Summary of Audible Signal Devices



142	Multi-Tone Sounder	Page 224	120 dB



134	Multi-Tone Sounder	Page 217	110 dB
570	Signal Horn	Page 234	
571	Signal Horn	Page 235	105 dB



172	Electronic Three Tone Gong in innovative, modern design	Page 238	
170	Electronic Three Tone Gong	Page 237	100 dB
110	Installation Multi-Tone Sounder	Page 210	



127	Buzzer	Page 212	
128	Buzzer	Page 213	90 dB
582	Signal Horn	Page 233	
482	Signal Horn	Page 232	85 dB



109	Electronic Installation Buzzer for the 22.5 mm control panel programme	Page 205	80 dB
107	Electronic Installation Buzzer for the 22.5 mm control panel programme (80 dB at 10 cm distance)	Page 204	65-75 dB

Sound output in db (measured at 1 m distance)

WERMA SIGNALTECHNIK

Further information about the "Audible" theme can be found in the chapter "Tech-Talk" beginning on page 332

Play Sound www.werma.com

120 dB

NEW	190	Multi-Tone Sounder	Page 228
	144	Multi-Tone Sounder	Page 226
	141	Multi-Tone Sounder	Page 223
	129	Multi-Tone Sounder	Page 218
	140	Multi-Tone Sounder	Page 220



110 dB

105 dB

133	Multi-Tone Sounder	Page 216
123	Siren	Page 214
126	Multi-Tone Sounder	Page 215
139	Multi-Tone Sounder	Page 222
572	Horn	Page 235
573	Horn	Page 236



100 dB

584	Horn	Page 230
585	Horn	Page 231
914	Alarm Bell	Page 239

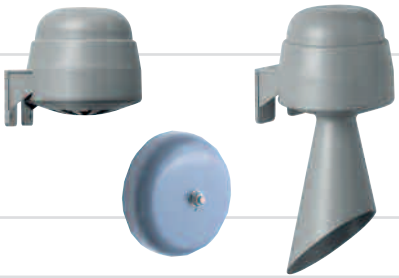

90 dB

118/119	Installation Buzzer	Page 208
382	Installation Buzzer	Page 210
118483/ 119483	Buzzer	Page 211

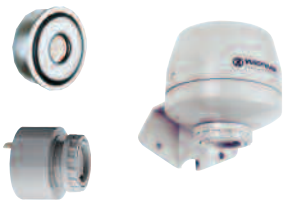

85 dB

80 dB

114	Installation Buzzer	Page 207

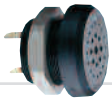

65-75 dB

Sound output in db (measured at 1 m distance)

338	AC Installation Buzzer	Page 209



107 Electronic Installation Buzzer





- **For the 22.5 mm control panel programme**
- **Low current consumption**
- **High protection rating IP 65**

TECHNICAL SPECIFICATIONS:

Dimensions (Ø x Depth):	28 mm x 12 mm (Protrusion from panel)
Housing:	PA fibreglass, high-impact
Tone frequency:	c. 2,400 Hz / c. 3,200 Hz (12 V)
Tone type:	Continuous tone or pulse tone with approx. 1 Hz
Fixing:	Installation mounting for Ø 22.5 mm (M 22)
Connection:	Connector plug with screw terminal max. 1.5 mm²
Life duration:	> 5,000 hrs

ORDER SPECIFICATIONS:

Play Sound www.werma.com

Voltage	12 V ⎓	24 V ≂	115 V ≂	230 V ~
Current Consumpt.	≤ 10 mA	≤ 8 mA	≤ 8 mA	≤ 8 mA
Continuous tone	**107 000 54**	**107 000 75**	**107 000 77**	**107 000 68**
Pulse tone	**107 010 54**	**107 010 75**	**107 010 77**	**107 010 68**

(12 V = / **107 000 54** and **107 010 54** without CSA and UL approval)

TECHNICAL DIAGRAMS:

see page 266



Simple connection by means of connector plug



High protection rating IP 65 for use in rough conditions

c UL us CE PG 30 g IP65 +50°C -20°C 80 dB (10 cm)

Electronic Installation Buzzer



- For the 22.5 mm control panel programme
- High protection rating IP 65

Life duration up to 5,000 hrs

TECHNICAL SPECIFICATIONS:

Dimensions (Ø x Depth):	52 mm x 35 mm (Protrusion from pan
Housing:	PC/ABS-Blend; Cap: PC
Tone frequency:	c. 2,100 Hz
Tone type:	Continuous tone or pulse tone with approx. 1 Hz
Fixing:	Install. mounting for Ø 22.5 mm (M 22) with anti-twist device
Connection:	Connector plug with screw terminal max. 1.5 mm²
Life duration:	> 5,000 hrs



Surface housing (accessory)

ORDER SPECIFICATIONS:

Play Sound www.werma.com

Voltage	24 V⎓	115 V⎓	230 V~
Current consumption	25 mA	25 mA	25 mA
Continuous tone	**109 000 75**	**109 000 77**	**109 000 68**
Pulse tone	**109 010 75**	**109 010 77**	**109 010 68**

ACCESSORIES:

Bracket with protective cap (IP54)	**975 109 01** (see picture on page 206)
Single surface housing	**975 109 02**
Double surface housing	**975 109 03**
Triple surface housing	**975 109 04**

Assembly comprises of only the surface housing. Beacons 800-802 (page 92 onwards) or 815-817 (page 94 onwards) have to be ordered additionally.

TECHNICAL DIAGRAMS:

see page 266



Surface housing (triple) for 2 beacons and 1 audible element (not included in assembly)

Electr. Installation Multi-Tone Sounder



- **For the 22.5 mm control panel programme**
- **High protection rating IP 65**
- **8 different tones selectable**
- **Adjustable sound output**



Surface housing (accessory)



Bracket (accessory)

TECHNICAL SPECIFICATIONS:

Dimensions (Ø x Depth):	72 mm x 40 mm (Protrusion from panel)
Housing:	PC/ABS-Blend; Cap: PC
Sound output:	Max. 100 dB (sound output is adjustable on rear side when mounted)
Fixing:	Installation mounting for Ø 22.5 mm (M 22) with anti-twist device
Connection:	Connector plug with screw terminal max. 1.5 mm²
Life duration:	> 5,000 hrs

TONE TYPES AND FREQUENCIES:

Play Sound www.werma.com

8 tones selectable on rear side of the housing

position 0	420 Hz	1.6 kHz	86 dB (A)
position 1	1 Hz	1.6 kHz	86 dB (A)
position 2	20 Hz	1.6 kHz	86 dB (A)
position 3		1.6 kHz	88 dB (A)
position 4	420 Hz	3.4 kHz	90 dB (A)
position 5	1 Hz	3.4 kHz	100 dB (A)
position 6	20 Hz	3.4 kHz	96 dB (A)
position 7		3.4 kHz	100 dB (A)

ORDER SPECIFICATIONS:

Voltage	24 V≂	115 V~	230 V~
Current consumption	80 mA	40 mA	40 mA
	110 000 75	**110 000 67**	**110 000 68**

ACCESSORIES:

Bracket with protective cap (IP 54)	**975 109 01**
Surface housing IP 65 (single)	**975 109 02**
Surface housing IP 65 (double) for 1 installation beacon and 1 audible element	**975 109 03**
Surface housing IP 65 (triple) for 2 installation beacons and 1 audible element	**975 109 04**

Further information see page 199.

TECHNICAL DIAGRAMS:

see page 266

WERMA SIGNALTECHNIK

114 Electronic Installation Buzzer

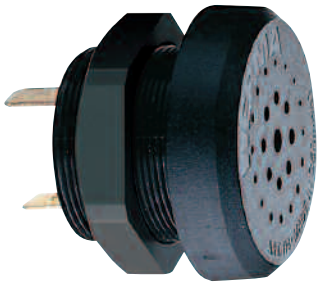

- **Installation buzzer for use in control panels**

TECHNICAL SPECIFICATIONS:

Dimensions (Ø x Depth):	42.5 mm x 10 mm (Protrusion from panel)
Housing:	PC/ABS-Blend; Nut: PA fibreglass, high-impact
Connection:	Spades 6.3 x 0.8 mm, finger proof model according to BGV A2, when used with insulated spades
Tone frequency:	c. 2,400 Hz
Fixing:	Installation mounting for Ø 30.5 mm (M 30)

ORDER SPECIFICATIONS:

Play Sound www.werma.com

Voltage	24 V ⎓ (12 - 30 V)	230 V ~ (110 - 240 V)
Current consumption	20 mA	20 mA
	114 068 15	**114 068 28**

TECHNICAL DIAGRAMS:

see page 266





118/119 Electronic Installation Buzzer





Cap

- **Loud piezo signal device**
- **Low current consumption**
- **IP 43 with cap**
- **Type 118 continuous tone**
- **Type 119 continuous tone and pulse tone**

TECHNICAL SPECIFICATIONS:

Dimensions (Ø x Depth):	43 mm x 13 mm (Protrusion from panel)
Housing:	ABS; for UL versions: PC/ABS-Blend
Connection:	Spades 6.3 x 0.8 mm, finger proof model according to BGV A2, when used with insulated spades
Tone frequency:	c. 2,400 Hz
Tone type:	Type 118 Continuous tone Type 119 Continuous tone and pulse tone, c. 1 Hz, selectable via plug-in terminal
Fixing:	Installation mounting for Ø 28 mm (M 28)

ORDER SPECIFICATIONS:

Play Sound www.werma.com

Voltage	12 V ⎓	24 V ≂	48 V ≂	115 V ≂	230 V ~
Current consumpt.	20 mA	20 mA	20 mA	20 mA	20 mA
Continuous tone	**118 068 14**	**118 068 15**	**118 068 26**	**118 068 27**	**118 068 28**
Continuous/pulse tone	–	**119 068 15**	**119 068 26**	**119 068 27**	**119 068 28**
					119 002 68
Cap	**975 118 00**				

Further variants with UL certification are available on request.

TECHNICAL DIAGRAMS:

see page 266



The Installation Buzzer 118 119 is also available in an Ex version (see page 260)

119 002 68

With cap

With cap

WERMA SIGNALTECHNIK

338 AC Installation Buzzer

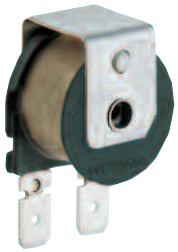

338 373



338 323

- **AC buzzer for use in electrical appliances**

TECHNICAL SPECIFICATIONS:

Dimensions (Ø x Depth):	23 mm x 30.5 mm (338 273)
Tone frequency:	100 Hz
Mounting:	As required
Fixing:	M 3 or M 4 thread

ORDER SPECIFICATIONS:

Play Sound www.werma.com

230 V ~ , c. 75 dB, spades, fixing: M 3	**338 273 28**
230 V ~ , c. 75 dB, solder lugs for printed circuits, fixing: M 3	**338 323 28**
230 V ~ , c. 75 dB, spades 6.3 x 0.8 mm, fixing: M 3	**338 373 28**
230 V ~ , c. 75 dB, spades, 6.3 x 0.8 mm, fixing: M 4	**338 374 28**

Further voltages on request.

TECHNICAL DIAGRAMS:

see page 271

30 g

65-75 dB

382 Installation Buzzer

- All-purpose installation buzzer
- Low current consumption



TECHNICAL SPECIFICATIONS:

Dimensions (Ø x Depth):	54.5 mm x 36.5 mm
Housing:	Steel, passivated
Connection:	AC: 2 wires, 215 mm long DC: 2 wires, 50 mm long The housing of the DC version is current-carrying
Fixing:	M 3 thread

ORDER SPECIFICATIONS:

Play Sound www.werma.com

AC Version		
Voltage	230 V ~	
Current consumption	15 mA	
	382 013 68	
DC Version		
Voltage	6 V ⎓	24 V ⎓
Current consumption	100 mA	70 mA
	382 013 53	**382 013 55**

Further voltages on request.

TECHNICAL DIAGRAMS:

see page 271

CE PG 50 g 90 dB

118 483/119 483 Electronic Buzzer



- For wall mounting
- Type 118 483 continuous tone
- Type 119 483 continuous and pulse tone

TECHNICAL SPECIFICATIONS:

Dimensions (L x H x W):	70 mm x 79.5 mm x 77 mm
Housing:	ABS
Connection:	Spades 6.3 x 0.8 mm, Finger proof model according to BGV A2, when used with insulated spades
Cable entry:	Cable diameter max. 9 mm
Tone frequency:	c. 2,400 Hz
Tone type:	Type 118 483 Continuous tone Type 119 483 Continuous tone and pulse tone, c. 1 Hz selectable via plug-in terminal
Fixing:	Bracket mounting, Sound outlet facing downwards

ORDER SPECIFICATIONS:

Play Sound www.werma.com

Voltage	24 V⎓ (12 - 30 V)	230 V~ (110 - 240 V)
Current consumption	20 mA	20 mA
Continuous tone	**118 483 15**	**118 483 28**
Continuous / pulse tone	**119 483 15**	**119 483 28**

Further voltages on request.

ADDITIONAL INFORMATION:

Please also see Buzzer 128 with additional advantages (see page 213)

- High protection rating IP 65
- Continuous or pulse tone selectable
- Modern design

TECHNICAL DIAGRAMS:

see page 266

CE PG 94 g IP33 +60°C -20°C 90 dB

127 Buzzer



Base mounting

- Continuous or pulse tone selectable
- Cable entry from the side possible
- Easy to mount
- High protection rating IP 65
- NEW • Adaptor for tube mounting (accessory)

TECHNICAL SPECIFICATIONS:

Dimensions (Ø x Height):	89 mm x 64 mm
Housing:	PC, black
Fixing:	Base mounting, tube mounting (accessory)
Installation position:	Sound outlet facing downwards
Connection:	Screw terminal with wire protection max. 1.5 mm²
Cable entry:	Cable diameter max. 9 mm
Tone type:	Continuous or pulse tone, selectable
Tone frequency:	2.3 kHz
Life duration:	> 5,000 hrs
Duty cycle:	100 %

ORDER SPECIFICATIONS:

Play Sound www.werma.com

Voltage	24 V≂	115 - 230 V~
Current consumption	≤ 15 mA	≤ 15 mA
	127 000 75	**127 000 68**



NEW The new adaptor (accessory) allows quick and simple mounting on a tube

ACCESSORIES:

NEW Adaptor for tube mounting, plastic, for tube Ø 25 mm	**975 420 01**
Base for tube Ø 25 mm, plastic, incl. rubber seal	**975 840 90**
Base for tube Ø 25 mm, metal, incl. rubber seal	**975 840 91**
Tube Ø 25 mm, all anodized aluminium	
100 mm	**975 845 10**
250 mm	**975 840 25**

TECHNICAL DIAGRAMS:

see page 266



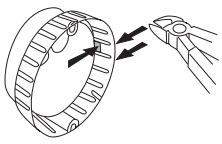

A piece of the rim can be broken out to allow for cable entry from the side



Buzzer in combination with Xenon Flash or LED Permanent Light see 176 and 174.

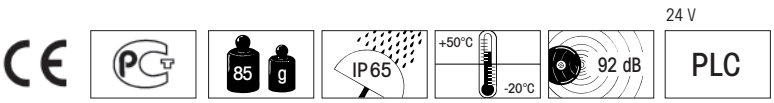

WERMA SIGNALTECHNIK

128 Buzzer



- Continuous or pulse tone selectable
- Integrated mounting bracket
- Modern design
- High protection rating IP 65

TECHNICAL SPECIFICATIONS:

Dimensions (L x H x W):	83 mm x 84 mm x 91 mm
Housing:	PC, PC/ABS-Blend, grey
Fixing:	Bracket mounting
Installation position:	Sound outlet facing downwards
Connection:	Screw terminal with wire protection max. 1.5 mm²
Cable entry:	Cable diameter max. 9 mm
Tone type:	Continuous or pulse tone, selectable
Tone frequency:	2.3 kHz
Life duration:	> 5,000 hrs
Duty cycle:	100 %

ORDER SPECIFICATIONS:

Play Sound www.werma.com

Voltage	24 V≂	115 - 230 V~
Current consumption	≤ 15 mA	≤ 15 mA
	128 000 75	**128 000 68**

TECHNICAL DIAGRAMS:

see page 266



Buzzer in combination with Xenon Flash or LED Permanent Light see page 180 und 178.



CE PG 90 g IP65 +50°C -20°C 92 dB 24 V PLC

123 Electronic Siren

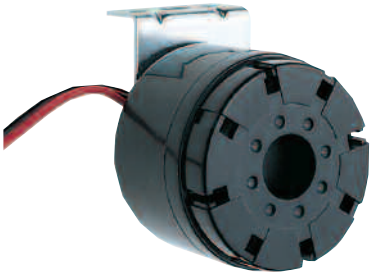

- **Loud compact siren**

TECHNICAL SPECIFICATIONS:

Dimensions (L x H x W):	54 mm x 66.5 mm x 67 mm
Housing:	ABS
Tone frequency:	2,500 - 3,500 Hz
Tone type:	Alternating
Connection:	2 wires, c. 450 mm long
Fixing:	Metal bracket

ORDER SPECIFICATIONS:

Play Sound www.werma.com

Voltage	12 V ⎓	24 V ⎓
Current consumption	150 mA	100 mA
	123 100 54	**123 200 55**

TECHNICAL DIAGRAMS:

see page 266

WERMA SIGNALTECHNIK

126 Electronic Multi-Tone Sounder



- **4 different tones can be triggered externally**

TECHNICAL SPECIFICATIONS:

Dimensions (L x H x W):	70 mm x 79.5 mm x 77 mm	
Housing:	ABS	
Tone types and frequencies:	Continuous tone:	c. 2,700 Hz
	Continuous tone:	c. 530 Hz
	Bell:	c. 2,700 Hz (pulse 20 Hz)
	Pulse tone:	c. 2,700 Hz (pulse 1 Hz)
Connection:	Screw terminal with wire protection max. 2.5 mm²	
Cable entry:	Cable diameter max. 9 mm	
Fixing:	Bracket mounting, sound outlet facing downwards	

ORDER SPECIFICATIONS:

Play Sound www.werma.com

Voltage	12 - 24 V ⎓
Current consumption:	80 mA
	126 052 15

ADDITIONAL INFORMATION:

Please also see Multi-Tone Sounder 134 with additional advantages (see page 217)

- High protection rating IP 65
- Choice of 8 different tones
- Extremely high sound output up to 109 dB
- Adjustable sound output

TECHNICAL DIAGRAMS:

see page 266

CE | PG | 140 g | IP33 | +50°C -20°C | 105 dB | 4 | PLC

133 Multi-Tone Sounder



Base mounting



NEW The new adaptor (accessory) allows quick and simple mounting on a tube



Top view: Mounting holes integrated into the product rim allow easy mounting without having to remove the cap

- Choice of 8 different tones
- Adjustable sound output
- Cable entry from the side possible
- Easy to mount
- High protection rating IP 65
- NEW Adaptor for tube mounting (accessory)

TECHNICAL SPECIFICATIONS:

Dimensions (Ø x Height):	89 mm x 64 mm
Housing:	PC, black
Fixing:	Base mounting, tube mounting (accessory)
Installation position:	Sound outlet facing downwards
Connection:	Screw terminal with wire protection max. 1.5 mm²
Cable entry:	Cable diameter max. 9 mm
Tone type:	Selectable, see table below
Tone frequencies:	See table below
Life duration:	> 5,000 hrs
Duty cycle:	100 %

TONE TYPES AND FREQUENCIES:

Play Sound www.werma.com

Tone	Tone type
1	Horn tone (c. 110 Hz)
2	Continuous tone (c. 3.0 KHz)
3	1 Hz tone (c. 3.0 KHz)
4	20 Hz whistle tone (c. 3.0 KHz)
5	800-970 Hz rising @ 1 Hz
6	2400-2850 Hz rising @ 7 Hz
7	1200-500 Hz falling @ 1 Hz
8	Alternating tone 800 Hz + 1200 Hz @ 1Hz

ORDER SPECIFICATIONS:

Voltage	24 V≂
Current consumption	≤ 80 mA
	133 000 75

ACCESSORIES:

NEW Adaptor for tube mounting, plastic, for tube Ø 25 mm	**975 420 01**
Base for tube Ø 25 mm, plastic, incl. rubber seal	**975 840 90**
Base for tube Ø 25 mm, metal, incl. rubber seal	**975 840 91**
Tube Ø 25 mm, all anodized aluminium	
100 mm	**975 845 10**
250 mm	**975 840 25**

TECHNICAL DIAGRAMS:

see page 266



Multi-Tone Sounder in combination with Xenon Flash or LED Permanent Light see page 177 and 175.

CE PG 80 g IP65 +50°C -20°C 105 dB 8 PLC

WERMA SIGNALTECHNIK

134 Multi-Tone Sounder



- Choice of 8 different tones
- Extremely high sound output up to 109 dB
- Adjustable sound output
- Integrated mounting bracket
- High protection rating IP 65

TECHNICAL SPECIFICATIONS:

Dimensions (L x H x W):	83 mm x 84 mm x 91 mm
Housing:	PC, PC/ABS-Blend, grey
Fixing:	Bracket mounting
Installation position:	Sound outlet facing downwards
Connection:	Screw terminal with wire protection max. 1.5 mm²
Cable entry:	Cable diameter max. 9 mm
Tone type:	Selectable, see table below
Tone frequencies:	See table below
Life duration:	> 5,000 hrs
Duty cycle:	100 %

TONE TYPES AND FREQUENCIES:

Play Sound www.werma.com

Tone	Tone type
1	Horn tone (c. 110 Hz)
2	Continuous tone (c. 3.0 KHz)
3	1 Hz tone (c. 3.0 KHz)
4	20 Hz whistle tone (c. 3.0 KHz)
5	800-970 Hz rising @ 1 Hz
6	2400-2850 Hz rising @ 7 Hz
7	1200-500 Hz falling @ 1 Hz
8	Alternating tone 800 Hz + 1200 Hz @ 1Hz

ORDER SPECIFICATIONS:

Voltage	24 V≂
Current consumption	≤ 80 mA
	134 000 75

TECHNICAL DIAGRAMS:

see page 266



Multi-Tone Sounder in combination with Xenon Flash or LED Permanent Light see page 181 und 179.

CE PG 100 g IP65 +50°C -20°C 109 dB 8 PLC

129 Electronic Multi-Tone Sounder



- Multi-Tone Sounder in die-cast aluminium housing
- German Lloyd Approval
- Salt water resistant
- 31 different tones available
- High protection rating IP 67

TECHNICAL SPECIFICATIONS:

Dimensions (L x H x W):	133 mm x 161 mm x 143 mm
Housing:	Die-cast aluminium
Connection:	Screw terminal max. 2.5 mm²
Cable entry:	Cable diameter M 20 x 1.5 mm
	Cable diameter 8-12 mm
Tone types and frequencies:	Selectable via DIP switch, see table on the right

ORDER SPECIFICATIONS:

Play Sound www.werma.com

Voltage	24 V ⎓	115 V ~	230 V ~
Current consumption	420 mA	120 mA	60 mA
	129 052 55	**129 052 67**	**129 052 68**

ADDITIONAL INFORMATION:

Multi-Tone Sounder 129 approved according to German Lloyd - Ship Classification and Technical Monitoring

German Lloyd sets technical, quality and safety standards for the industry and the maritime sectors. In addition to the classification of ships of all types, German Lloyd is also active as a worldwide technical monitoring authority.

TECHNICAL DIAGRAMS:

see page 266

24 V 230 V

GL 1,8 kg 2,2 kg IP67 +55°C -25°C 110 dB 31

WERMA SIGNALTECHNIK

The 129 Multi-Tone Sounder offers a large choice of international signal tones for the widest spectrum of applications.

TONE TYPES AND FREQUENCIES:

Tone 1	Tone type	Description
1	falling 1,200-500 Hz in 1 Hz stroke	DIN 33404
2	950 Hz pulse: 3 x 500 ms ON, 500 ms OFF, Pause 1.5 sec.	ISO 8201
3	alternating 825 Hz/1,025 Hz in 2 Hz stroke	
4	continuous 950 Hz	
5	950 Hz pulse: 1 sec. ON, 1 sec. OFF	
6	500-1.200 Hz rising and falling in 3 sec.	Siren
7	554 Hz/100 ms alternating 440 Hz/400 ms	French fire alarm signal AFNOR NFS 32 S 32-001
8	pulse 700 Hz: 150 ms ON, 150 ms OFF, Dauer 1 Min.	
9	pulse 800 Hz: 4 ms ON, 4 ms OFF	
10	continuous 500 Hz	
11	continuous 725 Hz	
12	continuous 825 Hz	
13	continuous 1,250 Hz	
14	continuous 1,500 Hz	
15	pulse 500 Hz: 500 ms ON, 500 ms OFF	
16	pulse 825 Hz: 500 ms ON, 500 ms OFF	
17	pulse 725: 0.7 sec. ON, 0.3 sec. OFF	
18	pulse 800 Hz: 0.25 sec. ON, 1 sec. OFF	
19	alternating 800 Hz/1,000 Hz in 2 Hz stroke	
20	pulse 825 Hz: 2.5 sec. ON, 2.5 sec OFF x 7, dann 7 sec. PULS	
21	pulse 950 Hz: 1 sec. ON, 1 sec. OFF, 3 sec. ON, 1 sec. OFF	
22	rising 500-1,200 Hz in 3 sec., 0.5 sec OFF	
23	rising 500-2,400 Hz in 3 sec.	
24	alternating 825 Hz/1,075 Hz in 1 Hz stroke	
25	alternating 500 Hz/900 Hz in 2 Hz stroke	
26	alternating 1,200 Hz/1,400 Hz in 25 Hz stroke	
27	rising 300-1,200 Hz in 3 sec.	
28	700-1,500 Hz rising and falling in 3 sec.	
29	rising 150-1,000 Hz in 10 sec., 40 sec. ON, falling in 10 sec.	
30	pulse 680 Hz: 0.875 sec. ON, 0.875 sec. OFF	
31	rising 1,400-1,600 Hz in 1 sec., falling in 0.5 sec.	NF C 48-265

140 Multi-Tone Sounder





- **32 tones for a diverse range of applications**
- **Adjustable sound output to 110 dB**
- **High protection rating IP 54 or IP 65**
- **Direct external setting of two tones possible with low voltage version**
- **VdS approved (Low voltage version)**

TECHNICAL SPECIFICATIONS:

Dimensions (Ø x Height):	93 mm x 73 mm (IP 54) 93 mm x 103 mm (IP 65)
Housing:	ABS
Connection:	Screw terminal max. 2.5 mm²
Cable entry:	Cable diameter max. 12 mm (IP 54) Cable gland M 20 x 1.5 mm (IP 65) Cable gland not included in assembly.
Tone types and frequencies:	Selectable via DIP switch, see table on opposite page

ORDER SPECIFICATIONS:

Play Sound www.werma.com

Multi-Tone Sounder IP 54		
Voltage	9-28 V ⎓	
Current consumption	< 30 mA	
red	**140 110 55**	
white	**140 910 55**	
Multi-Tone Sounder IP 65		
Voltage	9-28 V ⎓	110-240 V ~
Current consumption	< 30 mA	10 mA
red	**140 120 55**	**140 120 68**
white	**140 920 55**	**140 920 68**

ACCESSORIES:

Cable gland M 20 x 1.5 mm	**975 444 01**

TECHNICAL DIAGRAMS:

see page 267



The Electronic Multi-Tone Sounder 140 is also available in an Ex version (see page 261)

9-28 V

140 X10 | 140 X10 | 140 X20 | 140 X20

280 g | IP54 | 310 g | IP65 | +80°C -40°C | 110 dB | 32

WERMA SIGNALTECHNIK

The 140 Multi-Tone Sounder offers a large choice of international signal tones for the widest spectrum of applications.
The low voltage version allows two tones to be triggered externally.

TONE TYPES AND FREQUENCIES:

Play Sound www.werma.com

Selectable via DIP switch

Tone 1 No.	Tone type	Description	Sound output (dBA) (12 V)	(24 V)	Tone 2 Low voltage version
1	alternating 800/970 Hz in 2 Hz stroke	BS 5839-1: 2002	96	103	14
2	rising 800/970 Hz in 7 Hz stroke		93	100	14
3	rising 800/970 Hz in 1 Hz stroke	BS 5839-1: 2002, VDS tested	93	98	14
4	continuous 2,850 Hz		104	111	14
5	rising 2,400-2,850 Hz in 7 Hz stroke	VDS tested	99	105	4
6	rising 2,400-2,850 Hz in 1 Hz stroke		99	106	4
7	500-1,200 Hz rising in 3 sec., 0.5 sec OFF		93	100	14
8	falling 1,200-500 Hz in 1 Hz stroke	VDS tested; DIN 33404	90	95	14
9	alternating 2,400/2,850 Hz in 2 Hz stroke		102	109	4
10	pulse 970 Hz in 0.5 Hz stroke	Back-up-alarm BS 5839 Part 1 1988	92	100	14
11	alternating 800/970 Hz in 1 Hz stroke	BS5839 Part 1 1988	97	103	14
12	pulse 2,850 Hz in 0.5 Hz stroke		103	110	4
13	970 Hz pulse: 0.25 sec. ON / 1 sec. OFF		93	100	14
14	continuous 970 Hz	BS 5839-1: 2002	99	105	14
15	554 Hz/100 ms alternating 440 Hz/400 ms	French alarm signal AFNOR NFS 32 S 32-001	88	94	14
16	660 Hz pulse: 150 ms ON, 150 ms OFF	Swedish alarm signal	87	92	16
17	660 Hz pulse: 1.8 sec. ON, 1.8 sec. OFF	Swedish alarm signal	89	95	17
18	660 Hz pulse: 6.5 sec. ON, 13 sec. OFF	Swedish alarm signal	89	95	18
19	continuous 660 Hz	Swedish alarm signal	89	95	19
20	alternating 554/440 Hz in 0.5 Hz stroke		89	95	20
21	pulse 660 Hz in 1 Hz stroke	Swedish alarm signal	87	93	21
22	2,850 Hz pulse: 150 ms ON, 100 ms OFF	Pedestrian crossing GB	102	109	14
23	rising 800/970 Hz in 50 Hz stroke	Low frequency BS 5839 Part 1 1988	92	98	14
24	rising 2,400-2,850 Hz in 50 Hz stroke	High frequency	99	107	4
25	970 Hz pulse: 3 x 500 ms ON, 500 ms OFF, Pause 1.5 sec.	ISO 8201 Low frequency: Evacuation	97	103	26
26	2,850 Hz pulse: 3 x 500 ms ON, 500 ms OFF, Pause 1.5 sec.	ISO 8201 High frequency	102	109	25
27	continuous 4 kHz		90	98	27
28	alternating 800/970 Hz in 2 Hz stroke	FP 1063.1 - Telecoms/BS 5839-1: 2002	96	103	10
29	alternating 988/645 Hz in 2 Hz stroke		93	100	988 Hz cont. tone
30	alternating 510/610 Hz in 2 Hz stroke		92	97	510 Hz cont. tone
31	falling 1,200-300 Hz in 1 Hz stroke		91	97	31
32	alternating 510/610 Hz in 1 Hz stroke		90	98	510 Hz cont. tone



139 Multi-Tone Sounder

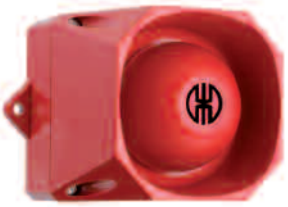



- Adjustable sound output up to 105 dB
- 32 tones for a diverse range of applications
- 2 tones can be triggered externally
- High protection rating IP 66

TECHNICAL SPECIFICATIONS:

Play Sound www.werma.com

Dimensions (L x H x W):	136 mm x 108 mm x 119 mm
Housing:	ABS
Connection:	Screw terminal max. 2.5 mm²
Cable entry:	Cable gland M 20 x 1.5 mm (not included in assembly)
Tone types and frequencies:	Selectable via DIP switch, see table on page 221

ORDER SPECIFICATIONS:

Voltage	9-60 V ⎓	115/230 V ~
Current consumption	13 mA (24 V)	20 mA (230 V)
red	**139 000 55**	**139 000 68**
grey	**139 100 55**	**139 100 68**

ACCESSORIES:

Cable gland M 20 x 1.5 mm	**975 444 01**

TONE TYPES AND FREQUENCIES:

Tone table see page 221.
Variances possible. For further details see www.werma.com.

TECHNICAL DIAGRAMS:

see page 267



Multi-Tone Sounder 139 in combination with a powerful Xenon Flash see page 186

Size comparison



CE 500 g IP66 +70°C -25°C 105 dB 32

WERMA SIGNALTECHNIK

141 Multi-Tone Sounder





- Adjustable sound output up to 110 dB
- 32 tones for a diverse range of applications
- 2 tones can be triggered externally
- High protection rating IP 66

TECHNICAL SPECIFICATIONS:

Play Sound www.werma.com

Dimensions (L x H x W):	165 mm x 136 mm x 132 mm
Housing:	PC/ABS-Blend
Connection:	Screw terminal max. 2.5 mm²
Cable entry:	Cable gland M 20 x 1.5 mm (not included in assembly)
Tone types and frequencies:	Selectable via DIP switch, see table on page 221

ORDER SPECIFICATIONS:

Voltage	9-60 V ⎓	115/230 V ~
Current consumption	120 mA (24V)	22 mA (230 V)
red	**141 000 55**	**141 000 68**
grey	**141 100 55**	**141 100 68**

ACCESSORIES:

Cable gland M 20 x 1.5 mm	**975 444 01**

TONE TYPES AND FREQUENCIES:

Tone table see page 221.
Variances possible. For further details see www.werma.com.

TECHNICAL DIAGRAMS:

see page 268

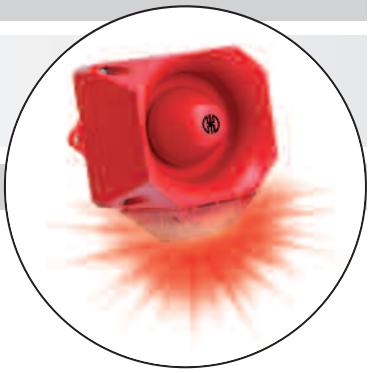

Multi-Tone Sounder 141 in Combination with a powerful Xenon Flash see page 187

Size comparison

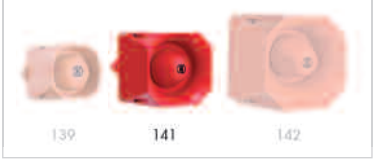



142 Electronic Multi-Tone Sounder



- Adjustable sound output up to 120 dB
- 42 tones for a diverse range of applications
- 3 tones can be triggered externally
- Duration of signal phase selectable
- High protection ration IP 66

TECHNICAL SPECIFICATIONS:

Play Sound www.werma.com

Dimensions (L x H x W):	168 mm x 168 mm x 155 mm
Housing:	PC/ABS-Blend
Connection:	Screw terminal max. 2.5 mm²
Cable entry:	Cable gland M 20 x 1.5 mm (not included in assembly)
Tone types and frequencies:	Selectable via DIP switch, see table on the right page



ORDER SPECIFICATIONS:

Voltage	18-30 V ⎓	115/230 V ~
Current consumption	450 mA	130 mA (115 V) / 65 mA (230 V)
red	**142 000 55**	**142 000 68**
grey	**142 100 55**	**142 100 68**

ACCESSORIES:

Cable gland M 20 x 1.5 mm	**975 444 01**

TECHNICAL DIAGRAMS:

see page 268

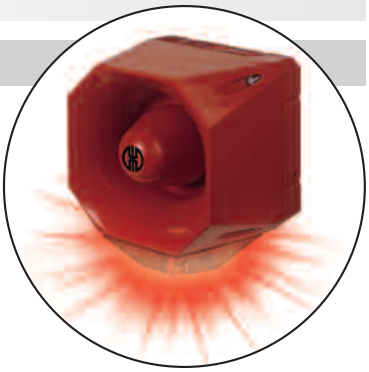

The Electronic Multi-Tone Sounder 142 is also available with a Xenon Flash see page 188

Size comparison



142 X00 68 | 142 X00 55

CE | PG | 1,8 kg | 1,6 kg | IP66 | +75°C -25°C | 120 dB | 42

WERMA SIGNALTECHNIK

The 142 Multi-Tone Sounder offers a large choice of international signal tones for the widest spectrum of applications. The first two tones can be freely chosen. The third tone is paired with the second tone. See tone table.

TONE TYPES AND FREQUENCIES:



Tone 1+2 No	Tone type	Use	Output (dBA)	Tone 3
1	alternating 800/970 Hz in 2 Hz stroke (250 ms-250 ms)		120	14
2	rising 800/970 Hz in 7 Hz stroke (7/s)		120	14
3	rising 800/970 Hz in 1 Hz stroke (1/s)		120	14
4	continuous 2,850 Hz		111	9
5	rising 2,400-2,850 Hz in 7 Hz stroke		109	4
6	rising 2,400-2,850 Hz in 1 Hz stroke		110	4
7	500-1,200 Hz rising in 3 sec., 0.5 sec. OFF	Slow Whoop Holland	119	14
8	falling 1,200-500 Hz in 1 Hz stroke	DIN/PFEER (PAPA), DIN 33404-3, VDS tested	119	14
9	alternating 2,400/2,850 Hz in 2 Hz stroke (250 ms-250 ms)		113	4
10	pulse 970 Hz in 0,5 Hz stroke (1 sec. ON / 1 sec. OFF)	PFEER Alarm	117	14
11	alternating 800/970 Hz in 1 Hz stroke (500 ms-500 ms)		118	14
12	pulse 2,850 Hz in 0.5 Hz stroke (1 sec. ON / 1 sec. OFF)		112	4
13	970 Hz pulse: 0.25 sec. ON / 1 sec. OFF		117	14
14	continuous 970 Hz	PFEER - Toxic gas	118	8
15	554 Hz/100 ms alternating 440 Hz/400 ms	French alarm signal AFNOR NFS 32 S 32-001	115	14
16	660 Hz pulse: 150 ms ON, 150 ms. OFF	Swedish alarm signal	114	14
17	660 Hz pulse: 1.8 sec. ON, 1.8 sec. OFF	Swedish alarm signal	115	14
18	660 Hz pulse: 6.5 sec. ON, 13 sec. OFF	Swedish alarm signal	115	14
19	continuous 660 Hz	Swedish alarm signal	116	1
20	alternating 554/440 Hz in 0.5 Hz stroke (1 sec. ON / 1 sec. OFF)	Swedish alarm signal	115	19
21	pulse 660 Hz in 1 Hz stroke (500 ms-500 ms)	Swedish alarm signal	115	4
22	pulse 2,850 Hz in 4 Hz stroke (150 ms ON / 100 ms OFF)		110	4
23	rising 800-970 Hz in 50 Hz stroke		117	14
24	rising 2,400-2,850 Hz in 50 Hz stroke		110	4
25	970 Hz puls.: 3 x 500 ms. ON, 500 ms OFF, break 1.5 sec.	ISO 8201 / US Temporal	118	14
26	2,850 Hz puls.: 3 x 500 ms. ON, 500 ms OFF, break 1.5 sec.	ISO 8201 / US Temporal	112	4
27	continuous 4,000 Hz		105	6
28	alternating 800/970 Hz in 2 Hz stroke (250 ms-250 ms)		118	14
29	alternating 990/650 Hz in 2 Hz stroke (250 ms-250 ms)		117	14
30	alternating 510/610 Hz in 2 Hz stroke (250 ms-250 ms)		116	14
31	rising 300-1,200 Hz in 1 Hz stroke		118	14
32	continuous Bell		117	3
33	continuous Bell: 3x500 ms. Pulse, 1.5 sec. Silence, then repeat	Bell / US Temporal	117	14
34	alternating 1,000/2,000 Hz in 1 Hz stroke (500 ms-500 ms)	Singapore	115	4
35	pulse 420 Hz (0,625 sec.)	Australian alarm signal	118	14
36	500-1,200 Hz rising in 3,75 sec., then 0,25 sec. OFF	Australian alarm signal (Evacuation)	117	14
37	rising 1,400-1,600 Hz in 1 sec., falling in 0.5 sec.	NF C 48-265	116	14
38	500-1,200 Hz rising and falling 3 sec.	Siren	117	14
39	pulse 720 Hz: 0.7 sec. ON, 0.3 sec. OFF	German industrial alarm	118	14
40	rising 422-775 Hz in 0.85 sec., 1 sec. silence, then repeat	NFPA Whoop	118	14
41	continuous 470 Hz	Horn (USA)	114	3
42	continuous 370 Hz	Air Horn (USA)	113	3

Multi-Tone Sounder



Base Mounting

- Sound output adjustable up to 114 dB
- 32 tones for a diverse range of applications
- 3 Tones can be triggered externally
- Award-winning design

TECHNICAL SPECIFICATIONS:

Play Sound www.werma.com

Dimensions (L x H x W):	109 mm x 113 mm x 152 mm
Housing:	PC/ABS-Blend
Connection:	Screw terminal with wire protection max. 1.5 mm²
Cable entry:	Membrane for cable diameter max. 13 mm
Fixing:	Wall, base and ceiling mounting
Tone types and frequencies:	Selectable via DIP switch, see table on the right page

ORDER SPECIFICATIONS:

Voltage	24 V ⎓	115 V ~	230 V ~
Current consumption	200 mA	55 mA	30 mA
	144 000 75	**144 000 67**	**144 000 68**



Wall mounting

ACCESSORIES:

Cable gland M 20 x 1.5 mm (for cable strain relief) Protection rating IP 65 is provided even without cable gland	**975 444 01**

QUICK AND SIMPLE MOUNTING:

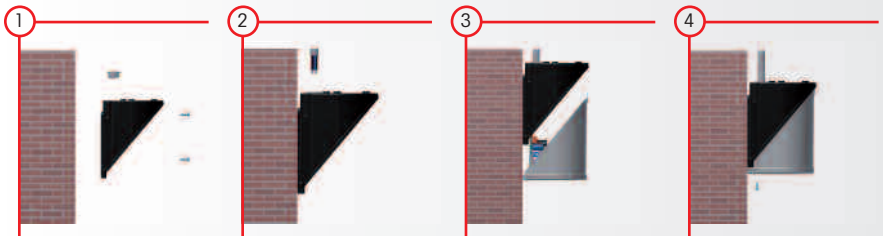

1. Place the lower part of the 444 Combination in the desired position.
2. Insert the connection cable and screw into terminal.
3. Snap the upper housing into place.
4. Secure the two parts with the screws supplied.

ADDITIONAL INFORMATION:

The various mounting options (wall, base or ceiling) maximise the sound output of the Multi-Tone Sounder.

TECHNICAL DIAGRAMS:

see page 268



Multi-Tone Sounder in combination with LED Double Flash (Page 190) or LED EVS Signal (Page 191)

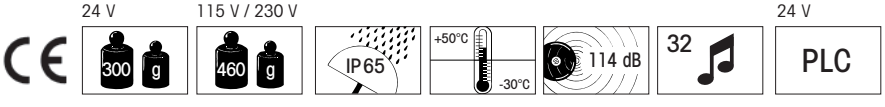

WERMA SIGNALTECHNIK

The 144 Multi-Tone Sounder offers a large choice of international signal tones for the widest spectrum of applications. 3 tones can be triggered externally.

TONE TYPES AND FREQUENCIES:

Tone 1	Tone type	Frequency	Description	Use	Tone 2	Tone 3
1	continuous	200		BS 5839-1:2002, VDS	440 Hz cont.	554 Hz cont.
2	rising	800 & 970	7 Hz		14	800 Hz cont.
3	rising	800 & 970	1 Hz		14	800 Hz cont.
4	continuous	2850			14	9
5	rising	2400 to 2850	7 Hz	VDS	4	2400 Hz cont.
6	rising	2400 to 2850	1 Hz		4	2400 Hz cont.
7	rising	500 to 1200	3 s, then 0.5s OFF (then repeat)		14	8
8	falling	1200 to 500	1 Hz	VDS	14	7
9	alternating	2400 & 2850	2 Hz		4	2400 Hz cont.
10	pulse	970	0.5 Hz (1s On/1s Off)	BS 5839 Part 1 1988	14	800 Hz cont.
11	alternating	800 & 970	1 Hz	BS 5839 Part 1 1988	14	800 Hz cont.
12	pulse	2850	0. Hz		4	22
13	pulse	970		0,25s On/1s Off	14	800 Hz cont.
14	continuous	970		BS 5839-1: 2002 PFEER - Toxic gas	10	8
15	alternating	554 & 440		France NFS	14	800 Hz cont.
16	pulse	660	150 ms On / 150 ms Off	Swedish	16	14
17	pulse	660	1.8s On / 1.8s Off	Swedish	17	14
18	pulse	660	6.5s On / 13s Off	Swedish	18	14
19	continuous	660		Swedish	19	31
20	alternating	554 & 440	0.5 Hz		20	19
21	pulse	660	1 Hz	Swedish	21	4
22	pulse	2850	150 ms On / 100 ms Off	GB	14	4
23	rising	800 to 970	50 Hz (low)	BS 5839 Part 1 1988	14	800 Hz cont.
24	rising	2400 to 2850	50 Hz (high)		4	2400 Hz cont.
25	pulse	970	3 x 500 ms ON / 500ms OFF / 1.5s silence, then repeat (low)	ISO 8201 US Temporal	26	14
26	pulse	2850	3 x 500 ms ON / 500 ms OFF / 1.5s silence, then repeat (high)	ISO 8201 US Temporal	25	4
27	continuous	4000			27	6
28	rising	2000 to 2850	7Hz		2000 Hz cont.	4
29	alternating	988 & 645	2Hz		988 Hz cont.	645 Hz cont.
30	alternating	510 & 610	2Hz		510 Hz cont.	610 Hz cont.
31	alternating	800 & 970	2Hz	5839-1:2002	800 cont.	14
32	alternating	800 & 1200	1Hz		800 cont.	1200 Hz cont.

Multi-Tone Sounder

NEW



- **32 tones for a diverse range of applications**
- **Adjustable sound output up to 110 dB**
- **3 tones can be triggered externally**
- **Fixing bracket for easy combination with (LED) Permanent Beacon/ Traffic Light 890**

TECHNICAL SPECIFICATIONS:

Play Sound www.werma.com

Dimensions (Ø x Height):	150 mm x 127 mm
Housing:	PC/ABS-Blend, grey
Fixing:	Base mounting, fixing bracket (accessory)
Connection:	Screw terminal
Cable entry:	From top or bottom with cable gland M 20 x 1.5 mm or from the back with rubber grommet Ø 6-12 mm, included in assembly
Tone types and frequencies:	Selectable via DIP switch, see table on the right page



ORDER SPECIFICATIONS:

Voltage	10-30 V ⎓	115 V ~	230 V ~
Current consumption	< 180 mA	< 55 mA	< 30 mA
grey	**190 000 55**	**190 000 67**	**190 000 68**



The fixing bracket can be mounted pointing inwards or outwards

ACCESSORIES:

FIXING BRACKET

Fixing bracket for one beacon	**975 890 33**
Fixing bracket for two beacons	**975 890 34**
Fixing bracket for three beacons	**975 890 35**
Fixing bracket for four beacons	**975 890 37**

Mounting material and connecting grommet included in assembly.

Further information can be found on page 162.

CONNECTION GROMMET

Connection grommet for traffic light combinations	**975 890 25**

TUBE ADAPTOR

Adaptor for tube mounting (suitable for Ø 75 mm tubes, see page 161)	**975 890 36**

TONE TYPES AND FREQUENCIES:

Selectable via DIP switch, see tone table on page 229.

ADDITIONAL INFORMATION:

An easy addition to an optical solution

The new multi-tone sounder 190 has been designed in the same housing as the 890 series (LED) beacons (see page 159 and 160). The sounder can therefore be effortlessly combined with up to three beacons, available in the colours red, yellow, green, blue and clear.

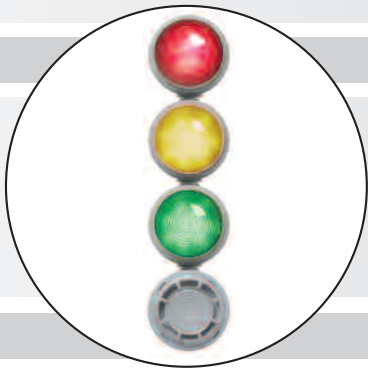

Loud Multi-Tone Sounder in combination with (LED) Beacon 890

TECHNICAL DIAGRAMS:

see page 269

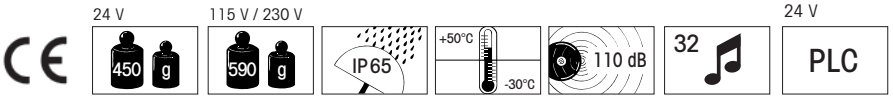

WERMA SIGNALTECHNIK

The Multi-Tone Sounder 190 offers a large choice of international signal tones for the widest spectrum of applications. 3 tones can be triggered externally.

TONE TYPES AND FREQUENCIES:

Play Sound www.werma.com

Tone 1	Tone type	Frequency	Description	Use	Tone 2	Tone 3
1	continuous	200		BS 5839-1:2002, VDS	440 Hz cont.	554 Hz cont.
2	rising	800 & 970	7 Hz		14	800 Hz cont.
3	rising	800 & 970	1 Hz		14	800 Hz cont.
4	continuous	2850			14	9
5	rising	2400 to 2850	7 Hz	VDS	4	2400 Hz cont.
6	rising	2400 to 2850	1 Hz		4	2400 Hz cont.
7	rising	500 to 1200	3 s, then 0.5s OFF (then repeat)		14	8
8	falling	1200 to 500	1 Hz	VDS	14	7
9	alternating	2400 & 2850	2 Hz		4	2400 Hz cont.
10	pulse	970	0.5 Hz (1s On/1s Off)	BS 5839 Part 1 1988	14	800 Hz cont.
11	alternating	800 & 970	1 Hz	BS 5839 Part 1 1988	14	800 Hz cont.
12	pulse	2850	0. Hz		4	22
13	pulse	970		0,25s On/1s Off	14	800 Hz cont.
14	continuous	970		BS 5839-1: 2002 PFEER - Toxic gas	10	8
15	alternating	554 & 440		France NFS	14	800 Hz cont.
16	pulse	660	150 ms On / 150 ms Off	Swedish	16	14
17	pulse	660	1.8s On / 1.8s Off	Swedish	17	14
18	pulse	660	6.5s On / 13s Off	Swedish	18	14
19	continuous	660		Swedish	19	31
20	alternating	554 & 440	0.5 Hz		20	19
21	pulse	660	1 Hz	Swedish	21	4
22	pulse	2850	150 ms On / 100 ms Off	GB	14	4
23	rising	800 to 970	50 Hz (low)	BS 5839 Part 1 1988	14	800 Hz cont.
24	rising	2400 to 2850	50 Hz (high)		4	2400 Hz cont.
25	pulse	970	3 x 500 ms ON / 500ms OFF / 1.5s silence, then repeat (low)	ISO 8201 US Temporal	26	14
26	pulse	2850	3 x 500 ms ON / 500 ms OFF / 1.5s silence, then repeat (high)	ISO 8201 US Temporal	25	4
27	continuous	4000			27	6
28	rising	2000 to 2850	7Hz		2000 Hz cont.	4
29	alternating	988 & 645	2Hz		988 Hz cont.	645 Hz cont.
30	alternating	510 & 610	2Hz		510 Hz cont.	610 Hz cont.
31	alternating	800 & 970	2Hz	5839-1:2002	800 cont.	14
32	alternating	800 & 1200	1Hz		800 cont.	1200 Hz cont.

584 Signal Horn



- **Loud electronic horn**
- **High life duration up to 5,000 hrs**
- **Integrated mounting bracket**
- **High protection rating IP 65**

TECHNICAL SPECIFICATIONS:

Dimensions (L x H x W):	83 mm x 198 mm x 91.5 mm
Housing:	PC, PC/ABS-Blend, grey
Fixing:	Wall mounting
Installation position:	Sound outlet facing downwards
Connection:	Screw terminal with wire protection max. 1.5 mm²
Cable entry:	Cable diameter max. 9 mm
Tone frequency:	c. 110 Hz
Life duration:	> 5,000 hrs
Duty cycle:	100 %

ORDER SPECIFICATIONS:

Play Sound www.werma.com

Voltage	24 V ≂	115 V ~	230 V ~
Current consumption	≤ 80 mA	≤ 70 mA	≤ 70 mA
	584 000 75	**584 000 67**	**584 000 68**

TECHNICAL DIAGRAMS:

see page 276



Horn in combination with Xenon Flash or LED Permanent Light see page 183 and 182

CE | 140 g | IP 65 | +50°C -20°C | 98 dB | 24 V PLC

WERMA SIGNALTECHNIK

585 Signal Horn



- **Loud electronic horn**
- **High life duration up to 5,000 hrs**
- **Integrated mounting bracket**
- **High protection rating IP 65**

TECHNICAL SPECIFICATIONS:

Dimensions (L x H x W):	83 mm x 84 mm x 91.5 mm
Housing:	PC, PC/ABS-Blend, grey
Fixing:	Wall mounting
Installation position:	Sound outlet facing downwards
Connection:	Screw terminal with wire protection max. 1.5 mm²
Cable entry:	Cable diameter max. 9 mm
Tone frequency:	c. 110 Hz
Life duration:	> 5,000 hrs
Duty cycle:	100 %

ORDER SPECIFICATIONS:

Play Sound www.werma.com

Voltage	24 V ⎓	115 V ~	230 V ~
Current consumption	≤ 80 mA	≤ 70 mA	≤ 70 mA
	585 000 75	**585 000 67**	**585 000 68**

ADDITIONAL INFORMATION:

Thanks to the use of the most modern technology, the 584 and 585 horns have a life duration of up to 5,000 hours (10 times longer than conventional horns).

The sound output can be adjusted up to 98 dB.



TECHNICAL DIAGRAMS:

see page 276

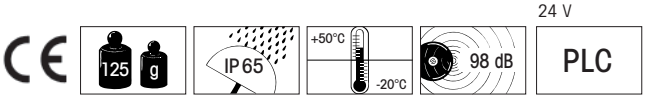

482 Signal Horn



- **Also available with low current consumption for use as lift alarm**

TECHNICAL SPECIFICATIONS:

Dimensions (L x H x W):	70 mm x 79.5 mm x 77 mm
Housing:	ABS
Connection:	Screw terminal with wire protection, 1.0-1.5 mm² fine strand, 1.0-2.5 mm² single wire
Cable entry:	Cable diameter 9 mm
Fixing:	Wall mounting, sound outlet facing downwards

ORDER SPECIFICATIONS:

Play Sound www.werma.com

AC Version			
Voltage	24 V ~	42 V ~	230 V ~
Current consumption	190 mA	75 mA	15 mA
	482 052 65	**482 052 66**	**482 052 68**
DC Version			
Voltage	12 V ⎓	24 V ⎓	
Current consumption	150 mA	70 mA	
	482 052 54	**482 052 55**	
Lift Alarm			
Voltage	6 V ⎓	12 V ⎓	
Current consumption	80 mA	130 mA	
	482 347 13	**482 347 14**	

Further voltages on request.

ADDITIONAL INFORMATION:

Please also see Horn 585 with additional advantages (see page 231)

- High protection rating IP 65
- Loud electronic horn
- High life duration up to 5,000 hrs
- Sound output 98 dB

TECHNICAL DIAGRAMS:

see page 274

Lift alarm



WERMA SIGNALTECHNIK

582 Signal Horn



- **Small horn with trumpet**

TECHNICAL SPECIFICATIONS:

Dimensions (L x H x W):	70 mm x 172 mm x 77 mm
Housing:	ABS
Connection:	Screw terminal with wire protection, 1.0-1.5 mm² fine strand, 1.0-2.5 mm² single wire
Cable entry:	Cable diameter 9 mm
Fixing:	Wall mounting, sound outlet facing downwards

ORDER SPECIFICATIONS:

Play Sound www.werma.com

AC Version

Voltage	12 V~	24 V~	42 V~	115 V~	230 V~
Current consumpt.	330 mA	190 mA	75 mA	15 mA	15 mA
	582 052 64	**582 052 65**	**582 052 66**	**582 052 67**	**582 052 68**

DC Version

Voltage	12 V⎓	24 V⎓
Current consumpt.	150 mA	70 mA
	582 052 54	**582 052 55**

Further voltages on request.

ADDITIONAL INFORMATION:

Please also see Horn 584 with additional advantages (see page 230)

- High protection rating IP 65
- Loud electronic horn
- High life duration up to 5,000 hrs
- Sound output 98 dB

TECHNICAL DIAGRAMS:

see page 276

CE PG 160 g IP33 +60°C -20°C 92 dB

570 Signal Horn



- Suitable for indoor and outdoor applications
- Pulse tone available

TECHNICAL SPECIFICATIONS:

Dimensions (L x H x W):	148 mm x 350 mm x 152 mm
Housing:	ABS
Connection:	Screw terminal max. 2.5 mm
Cable entry:	Rubber squeeze grommet Ø 7-10 mm
Fixing:	Wall mounting, sound outlet facing downwards

ORDER SPECIFICATIONS:

Play Sound www.werma.com

Continuous tone (AC)

Voltage	24 V~ (50 Hz)	42 V~ (50 Hz)	115 V~ (50/60 Hz)	230 V~ (50 Hz)
Current consumpt.	500 mA	250 mA	200 mA	70 mA
	570 052 65	**570 052 66**	**570 052 67**	**570 052 68**

Pulse tone (AC)

Voltage	230 V~ (50 Hz)
Current consumpt.	≤ 70 mA
	570 100 68

Continuous tone (DC)

Voltage	24 V⎓	115 V⎓	230 V⎓
Current consumpt.	350 mA	70 mA	40 mA
	570 052 55	**570 052 57**	**570 052 58**

Further voltages on request.

TECHNICAL DIAGRAMS:

see page 274



The Horn 570 is also available in an Ex version (see page 262)

CE PG 1 kg IP55 +60°C -20°C 108 dB

WERMA SIGNALTECHNIK

571 Signal Horn



- **Suitable for maritime applications**
- **Corrosion-proof aluminium housing**

TECHNICAL SPECIFICATIONS:

Dimensions (L x H x W):	132 mm x 340 mm x 139 mm
Housing:	Aluminium alloy, corrosion-proof
Connection:	Screw terminal max. 2.5 mm²
Cable entry:	Cable gland M 20 x 1.5 mm
	Cable diameter 10-12 mm
Fixing:	Wall mounting, sound outlet facing downwards

ORDER SPECIFICATIONS:

Voltage	24 V ⎓	115 V ~ (50 Hz/60 Hz)	230 V ~
Current consumption	350 mA	200 mA	70 mA
	571 052 55	**571 052 67**	**571 052 68**

TECHNICAL DIAGRAMS:

see page 275



572 Signal Horn

- **High Protection rating IP 65**



TECHNICAL SPECIFICATIONS:

Dimensions (L x H x W):	156 mm x 118 mm x 223 mm
Housing:	Aluminium, grey varnish
	Cap: ABS
Connection:	Screw terminal max. 2.5 mm²
Cable entry:	Cable gland at side, M 20 x 1.5 mm
	Cable diameter 10-12 mm
Fixing:	Wall mounting, sound outlet facing downwards

ORDER SPECIFICATIONS:

Voltage	24 V ⎓	115 V ~ (50 Hz/60 Hz)	230 V ~
Current consumption	350 mA	200 mA	70 mA
	572 000 55	**572 000 67**	**572 000 68**

Further voltages on request.

TECHNICAL DIAGRAMS:

see page 275

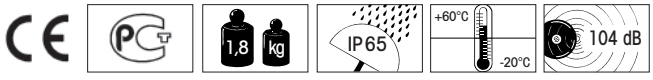

573 Signal Horn



- Modern design
- Cable gland for strain relief
- Concealed fixing screws
- High protection rating IP 65

TECHNICAL SPECIFICATIONS:

Dimensions (L x H x W):	178 mm x 104 mm x 207 mm
Fixing dimensions (L x H):	130 mm x 160 mm
Housing:	PC/ABS-Blend
Connection:	Screw terminal max. 2.5 mm²
Cable entry:	Cable gland M 16 x 1.5 mm Cable diameter 5-10 mm
Fixing:	Wall mounting, sound outlet facing downwards

ORDER SPECIFICATIONS:

Play Sound www.werma.com

Voltage	24 V ⎓	24 V ~ (50 Hz)	42-48 V ~ (50/60 Hz)	115 ~ (50/60 Hz)	230 V ~ (50 Hz)
Current consumpt.	350 mA	500 mA	250 mA	200 mA	70 mA
	573 000 55	**573 000 65**	**573 000 66**	**573 000 67**	**573 000 68**

TECHNICAL DIAGRAMS:

see page 275



The Horn 573 is also available in an Ex version (see page 263)

CE PG 1,25 Kg IP65 +50°C -30°C 105 dB

WERMA SIGNALTECHNIK

172 Electronic Three Tone Gong



- **Innovative, modern design**
- **Melodious A-major three tone sound output**
- **Adjustable sound output**
- **Multiple Gongs can be operated in parallel**
- **Frequency set by manufacturer**
- **Triggering by means of time relay or timer switch**

TECHNICAL SPECIFICATIONS:

Dimensions (L x H x W):	178 mm x 104 mm x 207
Housing:	PC/ABS-Blend
Connection:	Screw terminal with wire protection 0.5-2.5 mm²
Cable entry:	Cable gland M 16 x 1.5 mm
	Cable diameter 5-10 mm
Duty cycle:	Max. 5 min
Tone type:	A-major three tone
Sound output duration:	c. 8 seconds
Fixing:	Wall mounting, sound outlet facing downwards

ORDER SPECIFICATIONS:

Play Sound www.werma.com

Voltage	12 - 24 V≂	230 V~
Current consumption	250 mA	40 mA
	172 000 75	**172 000 68**

TECHNICAL DIAGRAMS:

see page 269

170 Electronic Three Tone Gong



- Melodious A-major three tone sound output
- Adjustable sound output
- Continuous operation possible
- Multiple Gongs can be operated in parallel
- Frequency set by manufacturer
- Triggering by means of time relay or timer switch

TECHNICAL SPECIFICATIONS:

Dimensions (L x H x W):	148 mm x 350 mm x 152 mm
Housing:	ABS
Connection:	Screw terminal with wire protection
Cable entry:	Rubber squeeze grommet Ø 7-10 mm
Tone type:	A-major 3 tone
Sound output duration:	c. 8 seconds
Fixing:	Wall mounting, sound outlet facing downwards

ORDER SPECIFICATIONS:

Play Sound www.werma.com

Voltage	24 V ⎓	230 V ~
Current consumption	200 mA	35 mA
	170 000 55	**170 000 68**

TECHNICAL DIAGRAMS:

see page 268

CE PG 820 g IP55 +50°C -20°C 100 dB

914 Alarm Bell



- **Robust alarm bell**
- **High protection rating IP 66**

TECHNICAL SPECIFICATIONS:

Dimensions (Ø x Depth):	167 mm x 76 mm
Housing:	Steel bell, epoxy dust enamelled
Connection:	Screw terminal max. 1.5 mm²
Cable entry:	Cable gland M 16 x 1.5 mm Cable diameter 5-10 mm

ORDER SPECIFICATIONS:

Play Sound www.werma.com

Voltage	24 V ⎓	110 V ~ (50/60 Hz)	230 V ~
Current consumption	300 mA	90 mA	35 mA
	914 052 55	**914 052 67**	**914 052 68** (50 Hz) **914 053 68** (60 Hz)

Further voltages on request.

TECHNICAL DIAGRAMS:

see page 292

IP66 +50°C -30°C 98 dB

at ⎓ 98 dB(A)
at ~100 dB(A)



Ex Signal Devices Overview

Ex (LED) Signal Towers

Ex Signal Tower 740



Zone 1, 2, 21, 22
Page 250

Ex LED Signal Tower 741



Zone 1 + 2
Page 251

Optical Ex Signal Devices

770 Ex LED Installation Beacon (M 20)



Zone 2 + 22
Page 252

771 Ex LED Installation Beacon (M 22)



Zone 2 + 22
Page 253

NEW

782 Ex LED Permanent Beacon



Zone 1, 2, 21, 22
Page 254

783 Ex Rotating Mirror Beacon



Zone 1, 2, 21, 22
Page 255

NEW

782 Ex LED Rotating Beacon



Zone 1, 2, 21, 22
Page 256

784 Ex Revolving Signal Beacon



Zone 1, 2, 21, 22
Page 257

738 Ex Double Flash Beacon



Zone 1, 2, 21, 22
Page 258

720 Ex Flashing Beacon



Zone 1, 2, 21, 22
Page 259

Audible Ex Signal Devices

718 Ex Electronic Installation Buzzer



Zone 1 + 2
Page 260

714 Ex Multi-Tone Sounder



Zone 0, 1, 2
Page 261

750 Ex Signal Horn



Zone 1 + 2
Page 262

761 Ex Signal Horn



Zone 1, 2, 21, 22
Page 263

Bulbs

LED Bulbs Page 166 + 167
Bulb Overview Page 168 + 169

Regulations and Requirements

Page 243 onwards

Quick-Finder

Quick-Finder – the fastest way to find the right signal device for your application!

WERMA offers a comprehensive range of explosion protected signal devices. These are suitable for deployment in gas, vapour and dust atmospheres.

With our Quick-Finder you can quickly and easily locate the correct signal device for your application.
If you require additional support in selecting a suitable Ex signal device, simply give us a call!

Signal Devices for Gas or Vapour Atmospheres

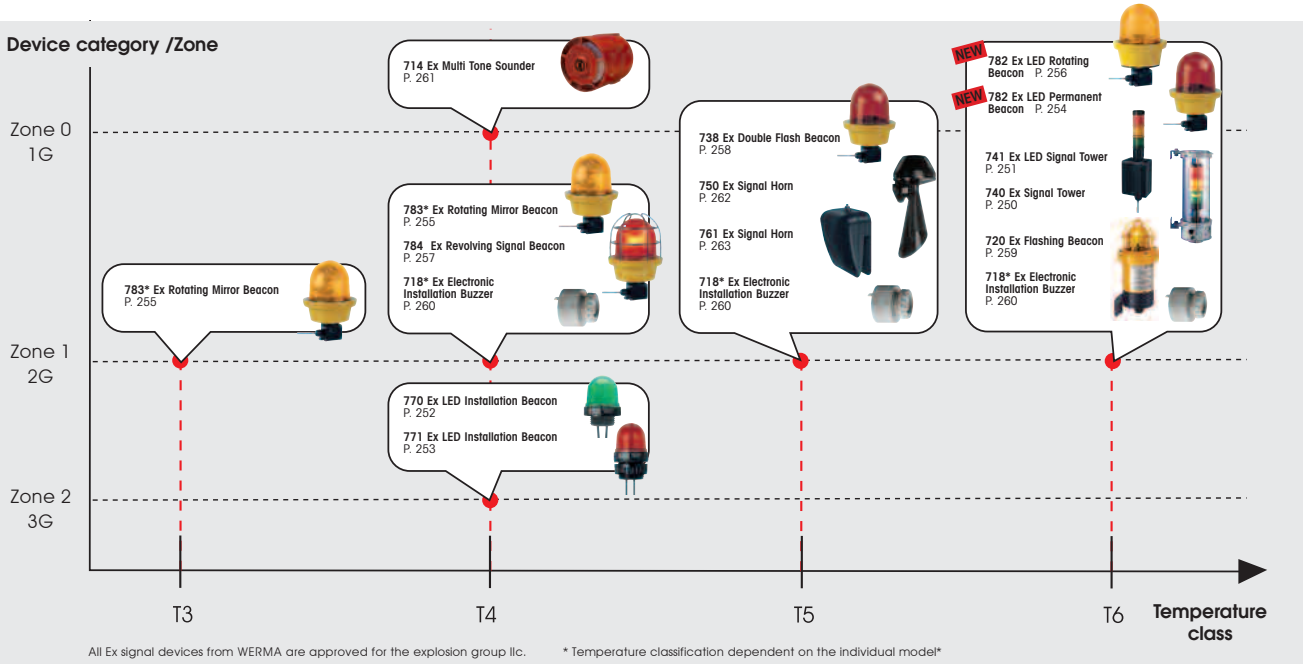

All Ex signal devices from WERMA are approved for the explosion group IIc. * Temperature classification dependent on the individual model*

Signal Devices for Dust Atmospheres

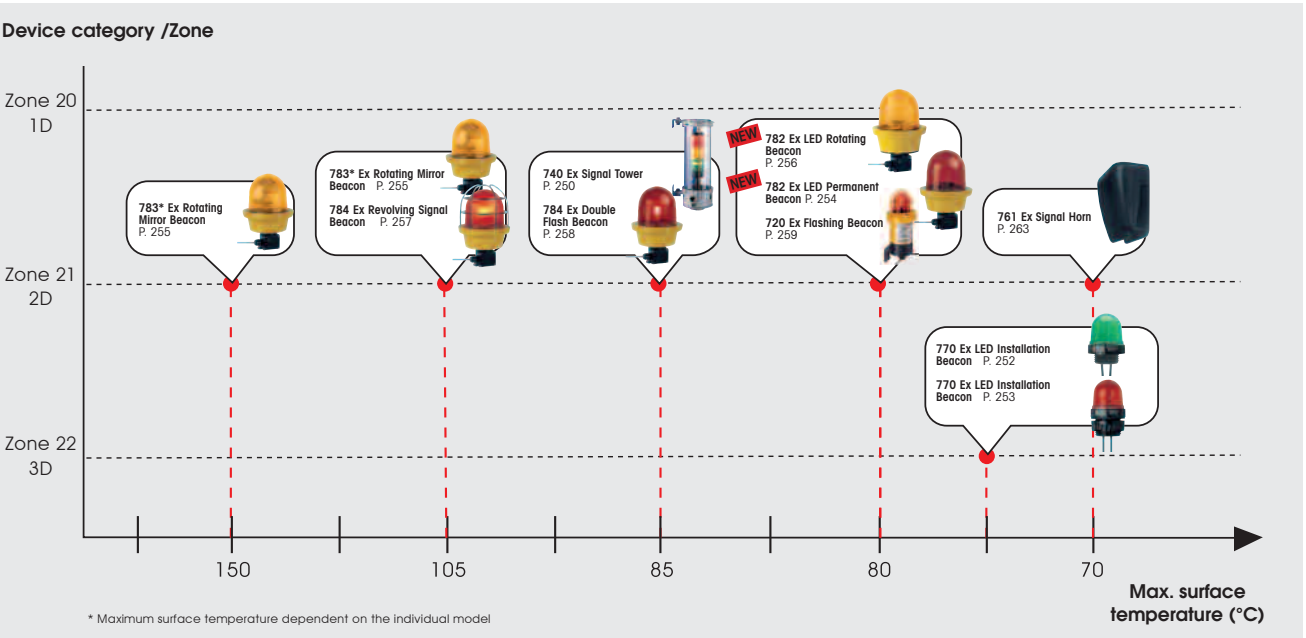

* Maximum surface temperature dependent on the individual model

WERMA SIGNALTECHNIK

Signal devices in areas with explosive hazard

Avoidance of explosions – explosion protection

Three types of explosion protection can be defined:

EXPLOSION PROTECTION		
Primary explosion protection Primary explosion protection entails preventing the formation of an explosive atmosphere by, for example, adequate ventilation.	**Secondary explosion protection** Secondary explosion protection measures come into effect when an explosive atmosphere still arises despite primary explosion protection: they entail the elimination of ignition source.	**Tertiary explosion protection methods**: Tertiary explosion protection methods minimise the effects of an explosion by a pressure-resistant construction or the controlled transference of the explosion pressure.

Legal basis

The member states of the European Community have set forth new EU directives in order to harmonise different European rulings. This means that national regulations come into line with the regulations within the European Community. The basis of this new legal system is the European Directive 94/9/EG dated 23.03.04. This directive defines the obligations of the manufacturer in the form of the demands made upon products manufactured encompassing electrical, and non-electrical devices as well as protection systems.

This directive is also known as the ATEX Directive in reference to its original working title "Atmosphère explosible". As it is anchored in Article 95 of the EU Agreement, its usual title is ATEX 95.

All new production devices used in areas with explosion hazard must conform to the ATEX directive as from 01.07.03. All devices and machines installed before this date may still be used. The basic standards for the construction of electrical devices are set forth in the EU Standards of the European Norm Organisation.



Manufacturers' obligations

Safety in areas with explosive hazard can only be guaranteed through close co-operation between all those involved. Co-operation between manufacturer, installer, operator, tester and the relevant controlling body is essential.

The **essential obligations** for the manufacturer of explosion – protected components are:

- The devices must be marked according to their field of use.
- The Conformity Assessment Procedure demands that all requirements for the awarding of the CE mark be fulfilled.
- Devices in category 1 and 2 are to be tested by a third-party testing authority to ensure that all regulations are observed. This is to be confirmed by the Type Examination Certificate.
- The manufacturer must prove that they have an appropriate quality management system.

Signal devices in areas with explosive hazard

Areas liable to explosion: Zone definitions

Areas liable to explosion as defined by §2 of the ElexV are areas in which a dangerous explosive atmosphere could arise due to site and production-induced conditions. In order to judge the degree of protective measures required, the areas liable to explosion are classified by the operator into zones according to the probability of an explosive atmosphere arising.



Definitions of the zones acc. to §2 Para 4 of ELEXV (96)

AREAS LIABLE TO EXPLOSION CAUSED BY FLAMMABLE GASES:		
Zone 0:	**Zone 1**:	**Zone 2**:
Areas in which a dangerous explosive atmosphere consisting of a mixture of air and gas, vapours or mist **is present continually, over a longer period or on a frequent basis.**	Areas in which a dangerous explosive atmosphere consisting of gases, vapours or mist is to be expected **from time to time.**	Areas in which a dangerous explosive atmosphere consisting of gases, vapours or mist is not to be expected and where it does arise then in all probability only **rarely and for a short period of time.**

AREAS LIABLE TO EXPLOSION CAUSED BY FLAMMABLE DUST:		
Zone 20	**Zone 21**	**Zone 22**
Sectors in which a dangerous explosive atmosphere consisting of a mixture of dust and air exists and **is present continually, over a longer period or on a frequent basis.**	Sectors in which a dangerous explosive atmosphere consisting of a mixture of dust and air is to be expected from **time to time.**	Sectors in which a dangerous explosive atmosphere caused by clouds of dust is not to be expected and where it does actually arise then in all probability only **rarely and for a short period of time.**

Device groups, categories and EPL protection level

The requirements for electrical components for use in areas liable to explosion are governed in the ATEX Directive (RL 94/9/EC) and in the standards EN 60079 and EN 61241, which are based on the two standards IEC 60079 and IEC 61241. The ATEX directive divides the electrical components into two device groups and 8 device categories. The IEC standards and the EN standards divide the devices into 8 protection levels or EPLs (Equipment Protection Levels). The device category and EPL are equivalent and indicate the zones in which the device may be used.

- **Device Group I:** Electrical components in pit-gas endangered mining areas.
- **Device Group II:** Electrical components in other areas liable to explosion from gas and dust.

DEVICE CLASSIFICATION ACCORDING TO GROUPS, CATEGORIES AND EPL:

Device group	Group I		Group II					
Device category	Category M		Category 1		Category 2		Category 3	
	M1	M2	1G	1D	2G	2D	3G	3D
EPL protection level	Ma	Mb	Ga	Da	Gb	Db	Gc	Dc
Zone	Continuous use	Switch-off in Ex atmosphere	0, 1, 2 (Gas)	20, 21, 22 (Dust)	1, 2 (Gas)	21, 22 (Dust)	2 (Gas)	22 (Dust)

Exception: If electrically conductive dust occurs in zone 22, then devices of Category 1D or 2D must be used.

Signal devices in gaseous and dust atmospheres

The basic requirements for installing explosion-protected electrical components are governed in the ATEX Directive (94/9/EC). Specific construction regulations must be observed to prevent an electrical component from becoming an ignition source. The so-called ignition protection types guarantee safe operation - depending on the Ex zone, even in the event of a malfunction.

Originally, the standards EN 50014 ff governed **gases and dusts**. These formed the basis for the series of standards IEC 60079. The series of standards EN 60079 with the same content replace the standards 50014 ff. The standard EN 60079-0 is the basic standard, as it describes the general requirements. The different ignition protection types are listed in the other series of standards EN 60079.

The only ignition protection type for **dust** was the standard EN 50281 "Protection by enclosure". Additional ignition protection types were added with the introduction of the series of standards IEC 61241 and EN 61241. The old dust standard EN 50281 served as the basis for EN 61241-1 "Protection by enclosure tD". The standard EN 61241-0 is in turn the basic standard here.

As the series of standards IEC 60079 and IEC 61241 have the same structure and many points in both series are identical, IEC 61241 is currently being integrated into IEC 60079. As a result, in future there will then only be one **series of standards for gas and dust.** In accordance with this, there will also then only be one series of standards EN 60079.

The structure remains identical, and as a result the standard EN 60079-0 contains the General Requirements for both gaseous and for dust atmospheres and the ignition protection types are described in the other standards. The individual standards or ignition protection types are then designed either only for gaseous atmospheres, only for dust atmospheres or for both atmospheres.



Signal devices in areas with explosive hazard

The following ignition protection types are used for WERMA products:

FLAME-PROOF ENCLOSURES “d“ — GAS

EN 60079-1
Electrical apparatus for explosive gas atmospheres – Part 1: Flameproof enclosures “d“.

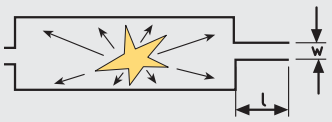

If an explosion occurs inside a pressure resistant encapsulated housing it cannot break through this boundary.

INCREASED SAFETY “e“ — GAS

EN 60079-7
Electrical apparatus for explosive gas atmospheres – Part 7: Increased safety “e“.



Sparks and high temperatures are made impossible by increased safety measures.

INTRINSIC SAFETY “i“ — GAS

EN 60079-11
Electrical apparatus for explosive gas atmospheres – Part 11: Intrinsic safety “i“.



The electric current and voltage in the circuit is kept so low that fiery sparks, arcing or temperatures cannot occur.

INTRINSIC SAFETY “iD“ — DUST

IEC 61241-11, EN 61241-11
Electrical apparatus for use in the presence of combustible dust – Part 11: Protection by intrinsic safety “iD“

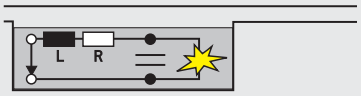

The energy in the electric circuit is kept so low that sparks, electric arcs and high temperatures that could serve as ignition sources cannot occur.

NON-SPARKING “nA“ — GAS

EN 60079-15
Electrical apparatus for explosive gas atmospheres – Part 15: Construction, test and marking of type of protection “n“ electrical apparatus.



Sparks, arcing and hot surfaces are reliably prevented.

ENCAPSULATION “m“ — GAS & DUST

IEC 60079-18, EN 60079-18 (prev.: EN 50028)
Electrical apparatus for use in explosive atmospheres – Part 18: Encapsulation “m“



Parts that could ignite an explosive atmosphere as a result of sparks are embedded in a potting compound so that the explosive atmosphere cannot be ignited.

PROTECTION BY ENCLOSURE “t“ — DUST

EN 60079-31 (prev.: EN 61241-1)
Explosive atmospheres – Part 31: Equipment-Protection by enclosure “t“



The housing is dustproof. The Ex atmosphere is kept away from the ignition source, the surface temperature of the housing is restricted.

The integration of the standard EN 61241-11 intrinsic safety “iD“ into the standard EN 60079-11 intrinsic safety “i“ is in preparation.

Explosion groups for gases, vapours and dusts

For gases, the flammability and the ignition penetration power of an explosive mix are substance-typical properties. Explosive mixtures of air with flammable gases or vapours are divided into explosion groups I and II.

Explosion group I applies to pit gas and coal dust. It is only relevant in mining.

In **Explosion group II** the flammability of the gas increases from IIA to IIB and IIc. These define different criteria, e.g. with the ignition protection type "d-pressure-resistant encapsulation (EN 60079-1)" the requisite slit types and dimensions or, as in the protection type "i-Intrinsic safety (EN 60079-11)", the maximum permissible electricity and current ratings. No further sub-division of explosion group II is made for other protection types.

Now the new **Explosion group III** has been added for areas with flammable dust outside of mining. The electrical components are classified in three groups, i.e. IIIA, IIIB and IIIC, depending on the type of dust concerned.

The most demanding requirements for the electrical components are placed by groups IIC and IIIc. They may also be used in the areas IIA and IIB or IIIA and IIIc. In the same way, electrical components of the groups IIB and IIIB may be used in the areas IIA and IIIA.

AREA	EXPLOSION GROUP	FLAMMABLE SUBSTANCES	FLAMMABILITY
Mining	I	Pit gas (Methane), coal dust	
Gas	IIA	Acetone, Petrol, Methanol, Propane, Toluene	relatively low
	IIB	Ethylene, City Gas	high
	IIC	Hydrogen, Acetylene, Carbon Sulphide	very high
Dust	IIIA	Flammable Lint	relatively low
	IIIB	Non-Conductive Dusts	high
	IIIC	Conductive Dusts	very high



Temperature classification of gases and vapours

The ignition temperature of explosive gaseous and vaporous atmospheres is influenced by several different factors. These include size, type and consistence of the heated surface. The **IEC 60079-4** contains a **"Method of determining ignition temperature"** with which it is possible to calculate the lowest practically possible temperature with relative accuracy.

Gases and vapours are classified herein in temperature classes. Explosion-protected components are laid out in their surface temperature so that ignition cannot occur on the surface.

IGNITION TEMPERATURES AND TEMPERATURE CLASSES OF EXPLOSION-ENDANGERED GAS AND VAPOUR ATMOSPHERES

Temperature classes	Ignition temperature of the explosion-liable gas/ vapour atmosphere	Permissible surface temperature of the component
T1	≥ 450°C	≤ 450°C
T2	≥ 300 … ≤ 450°C	≤ 300°C
T3	≥ 200 … ≤ 300°C	≤ 200°C
T4	≥ 135 … ≤ 200°C	≤ 135°C
T5	≥ 100 … ≤ 135°C	≤ 100°C
T6	≥ 85 … ≤ 100°C	≤ 85°C

Signal devices in areas with explosive hazard

The explosion group and the temperature class define which gas and vapour atmospheres the explosion protected equipment may be deployed in. The following table indicates the temperature class and explosion group for a series of flammable gases and vapours:

EXPLOSION GROUP AND TEMPERATURE CLASSIFICATION OF GASES AND VAPOURS

Temperature class	T1	T2	T3	T4	T5	T6
Explosion group						
I	Methane	-	-	-	-	-
IIA	Ammonia Methane Ethane Propane	Ethyl alcohol Cyclohexane n-Butane n-Hexane	Petrol Diesel	Ethanal Ethyl aether	-	-
IIB	Town gas	Ethylene	Hydrosulphide Ethylene glycol	-	-	-
IIC	Hydrogen	Acetylene	-	-	-	Coal sulphide

Permissible surface temperature of electrical components in dust atmospheres



EN 50281-2-1 – Electrical apparatus for use in the presence of combustible dust – Part 2: Test methods – Section I: **Methods for determining the minimum ignition temperature of dust.**

Different values are to be expected depending on whether the dust is in the form of a gathered layer (Value A) or as an active cloud (Value B). The permissible surface temperature for component parts exposed to dust is calculated as such: 75K is deducted from value A and 2/3 of value B calculated. The smaller of the two values is the highest **permissible surface temperature.**

EXAMPLES OF IGNITION TEMPERATURES FOR SOME DIFFERENT DUST TYPES

Solid matter	Value A Ignition temp. according to EN 50281-2-1 layer (°C)	Value B Ignition temp. according to EN 50281-2-1 cloud (°C)	Permissable surface temperature (°C) Smallest value of calculation (A-75K) and 2/3*B									
			450..	300..	280..	260..	230..	215..	200..	180..	165..	160..
			<300	<280	<260	<230	<215	<200	<180	<165	<160	<135
Examples of natural products												
Cotton	350	560			275							
Lignite	225	380										150
Grain	290	420						215				
Milk powder	340	440			265							
Examples of chemical-technical products												
Soot	385	620	310									
Polyvinylchloride	380	530	305									
Sulphur	280	280							185			
Examples of metal dust												
Iron	300	310						206				
Magnesium	410	610	335									

Minimum product marking of explosion-protected components

The Directive 94/9/EG (ATEX 95) section II defines an unequivocal marking for components in explosion-protected areas. Furthermore, additional identification was required in the series of standards EN 60079 and EN 61241. This must include the following points:

- Name and address of the manufacturer
- Description of series and type
- Series number where applicable
- Details referring to the explosion protection type (examples):

GAS	CE	0102	Ex	II	2 G	Ex	me			II	T5
DUST	CE	0102	Ex	II	2 D	Ex	tD	A 21	IP65		T175°C
	1	**2**	**3**	**4**	**5**	**6**	**7**	**8**	**9**	**10**	**11**

1	CE conformity marking
2	The number of the named authority monitoring production
3	Ex Hexagon, special identification for the prevention of explosions
4	Device group (I or II)
5	Device category (see page 244)
6	Symbols to show that one or more norms from norm series EN 60079 or IEC/EN 61241) have been used. Previously, EEx was employed to indicate that it was a European standard.
7	Abbreviation of the protection type. All these used in the component must be named e.g. "me": Main ignition protection type "m",secondary type "e". There were previously no protection types for dust atmospheres but rather just "protection via housing". This is today to be found under protection type "tD".
8	The of protection type "tD" is determined by means of the IP test conducted according to the "A" procedure. Procedure "B" is equivalent. The device is designed for zone 21.
9	With dust protected devices the IP degree of protection is also indicated.
10	Explosion group (II, IIA, IIB or IIC)
11	Temperature classes with gases (see page 247). Maximum surface temperature for dusts.

Components for Zones 2 and 22 may not bear the ATEX mark in their device classification or display the number of a monitoring authority.



The **details of the authority responsible for the testing** of the component for the relevant norms must also be stated, for example:

BVS	03	ATEX	E 118	X
3RD PARTY TESTING AUTHORITY	YEAR OF TESTING	ACC. TO DIRECTIVE 94/4/EG	CONSECUTIVE NO. OF CERTIFICATE	SPECIAL CONDITIONS

An **example** of product marking on an explosion-protected electrical component :

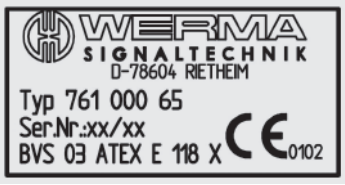

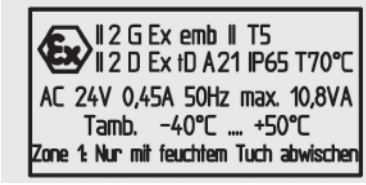

"Zone I : Only to be wiped with a damp cloth". The minimal marking is augmented by recommendations vital for safe use. The certificate of conformity is to be provided with every device as well as the compulsory marking. The manufacturer hereby confirms conformity with the relevant norms and clearly states upon which EU standards the CE mark is based. An instruction and mounting leaflet is to be provided with every device. These documents should be filed safely by the user for future reference.

740 Ex Signal Tower



- Zone 1 and 2, Zone 21 and 22
- Signal tower Kombi*SIGN* in flame-proof enclosure
- Available with up to 3 light elements
- Also available as LED version

Life duration up to 100,000 hrs

TECHNICAL SPECIFICATIONS:

Dimensions (L x H x W):	154 mm x 431 mm x 201 mm
Housing:	Aluminium, glass
Connection:	Screw terminal max. 2.5 mm² Contact protection according to VDE incl. approved pressure resistant cable gland NPT 3/4"
Explosion protection:	⟨Ex⟩ II 2G EEx d II C T6 ⟨Ex⟩ II 2D Ex IP66 85°C
Approval:	L.C.I.E. 97 EX 6012 Technical specifications of signal tower see 840 series (page 38).

ORDER SPECIFICATIONS:

Voltage	12-230 V Bulb	24 V≂ LED
red / green	**740 210 00**	**740 210 55**
red / yellow / green	**740 231 00**	**740 231 55**



ACCESSORIES:

Bulb BA15d, 5 W, 24 V	**955 840 35**
Bulb BA15d, 5 W, 230 V	**955 840 38**

TECHNICAL DIAGRAMS:

see page 280



The Ex Signal Tower 740 in the perfume and aroma industry

CE ⟨Ex⟩ | 2 G Zone 1 + 2 | 2 D Zone 21 + 22 | 6,3 kg | IP68 | +40°C -20°C | 24 V PLC

WERMA SIGNALTECHNIK

741 Ex LED Signal Tower





- Zone 1 and 2
- Competitively priced Ex LED Signal Tower
- No additional zener barrier required
- Combination of encapsulation "m" and intrinsic safety "ib" with connection area "e"

Life duration up to 100,000 hrs

TECHNICAL SPECIFICATIONS:

Dimensions of the Zener Barrier (L x H x W):	76 mm x 110 mm x 75 mm
Dimensions total:	2 tier (L x B x H): 76 mm x 229 mm x 75 mm 3 tier (L x B x H): 76 mm x 263 mm x 75 mm
Housing:	Polyester, PC
Connection:	Screw terminal max. 2.5 mm² incl. approved cable gland "e"
Explosion protection:	⟨Ex⟩ II 2G EEx me [ib] IIC T6
Approval:	PTB 06 ATEX 2005

ORDER SPECIFICATIONS:

Voltage	24 V ⎓
Current consumption	< 90 mA
red / green	**741 110 55**
red / yellow	**741 120 55**
red / yellow / green	**741 130 55**

TECHNICAL DIAGRAMS:

see page 280



The Ex LED Signal Tower 741 warns of imminent danger in gas explosion endangered areas, e.g. in the chemical industry and paint shops

CE ⟨Ex⟩ | 2 G / Zone 1 + 2 | 2 tier: 690 g | 3 tier: 710 g | IP65 | +50°C / -20°C

770 Ex LED Installation Beacon





- **Ex LED Permanent Beacon with M 20 thread**
- **Suitable for use in gas and dust explosion endangered areas (Zone 2 and 22)**
- **Extremely high light intensity**
- **Ideal for installation in limited space due to short thread**

TECHNICAL SPECIFICATIONS:

Dimensions (Ø x Height):	29 mm x 32 mm (Protrusion from panel)
Housing:	PC, black
Lens:	PC, transparent
Connection:	2 wires, c. 115 mm long
Fixing:	Installation mounting for Ø 20.5 mm (M 20 x 1.5 mm)
Explosion protection:	Ex II 3G Ex nA II (fulfills T4, when temperature at place of operation lies between -20 and +50 °C)
	Ex II 3D IP65 (fulfills T 75 °C, when temperature at place of operation lies between -20 and +50 °C)
Approval:	BVS 05 E 041 U

Seal included in assembly.

ORDER SPECIFICATIONS:

Voltage	24 V ⎓
Current consumption	< 45 mA
red	**770 100 55**
green	**770 200 55**
yellow	**770 300 55**
clear	**770 400 55**

TECHNICAL DIAGRAMS:

see page 281



Mainly sidewards illumination

CE Ex | 3 G Zone 2 | 3 D Zone 22 | 12 g | IP65 | +50°C -20°C | PLC

WERMA SIGNALTECHNIK

771 Ex LED Installation Beacon







Mainly sidewards illumination

- **Ex LED Permanent Beacon with M 22 thread for the control panel programme**
- **Extremely high light intensity**
- **Suitable for use in gas and dust explosion endangered areas (Zone 2 and 22)**

TECHNICAL SPECIFICATIONS:

Dimensions (Ø x Height):	29 mm x 32 mm (Protrusion from panel)
Housing:	PC, black
Lens:	PC, transparent
Connection:	2 wires, c. 105 mm long
Fixing:	Installation mounting for Ø 22.5 mm (M 22 x 1.5 mm)
Explosion protection:	Ⓔx II 3G Ex nA II (fulfills T4, when temperature at place of operation lies between -20 and +50 °C)
	Ⓔx II 3D IP65 (fulfills T 75 °C, when temperature at place of operation lies between -20 and +50 °C)
Approval:	BVS 05 E 041 U

Seal included in assembly.

ORDER SPECIFICATIONS:

Voltage	24 V ⎓
Current consumption	< 45 mA
red	**771 100 55**
green	**771 200 55**
yellow	**771 300 55**
clear	**771 400 55**

TECHNICAL DIAGRAMS:

see page 281

CE Ⓔx | 3 G Zone 2 | 3 D Zone 22 | 16 g | IP65 | +50°C -20°C | PLC

782 Ex LED Permanent Beacon



- Suitable for use in gas and dust explosion endangered areas (Zone 1 and 2, Zone 21 and 22)
- Connection area "e" for simple connection
- Extremely high light intensitiy
- Can be mounted as required
- Salt water resistant

TECHNICAL SPECIFICATIONS:

Life duration up to 50,000 hrs

Dimensions (Ø x Height):	209 mm x 315 mm
Housing:	Aluminium
Lens:	Reinforced borosilicate glass
Mounting Plate:	VA stainless steel
Connection:	Screw terminal max. 2.5 mm²
Cable entry:	Cable gland M 20 x 1.5 mm Cable diameter 5-13 mm
Connection area:	Increased Safety "e"
Installation position:	As required
Fixing:	Base mounting, bracket mounting (accessory), tube mounting (accessory)
Duty cycle:	100 %
Explosion protection:	Ⓔx II 2G Ex de IIC T6 Ⓔx II 2D Ex tD A21 IP 66 T 80 °C
Approval:	PTB 06 ATEX 1039

ORDER SPECIFICATIONS:

Voltage	24 V ⎓	230 V ~
Current consumption	200 mA	50 mA
red	**782 100 55**	**782 100 68**
yellow	**782 300 55**	**782 300 68**



Wire guard (accessory)



Clamp for tube mounting (accessory)



Mounting plate (accessory)



Bracket (accessory)

ACCESSORIES:

Wire guard	**975 783 01**
Mounting plate	**975 783 02**
Clamp for tube mounting 1¼"	**975 783 03**
Clamp for tube mounting 1½"	**975 783 04**
Clamp for tube mounting 2"	**975 783 05**
Bracket	**975 783 06**

TECHNICAL DIAGRAMS:

see page 281



Excellent light intensity and long life duration

CE Ⓔx | 2 G Zone 1 + 2 | 2 D Zone 21 + 22 | 4,4 kg | IP66 | +50°C -20°C

Ex Signal Devices

WERMA SIGNALTECHNIK

783 Ex Rotating Mirror Beacon



- Suitable for use in gas and dust explosion endangered areas (Zone 1 and 2, Zone 21 and 22)
- Flame-proof enclosure "d" with "e" connection area
- High life duration thanks to low wear wheel and disc drive
- Can be mounted as required
- Salt water resistant

TECHNICAL SPECIFICATIONS:

Dimensions (Ø x Height):	209 mm x 315 mm
Housing:	Aluminium
Lens:	Reinforced borosilicate glass
Mounting Plate:	VA stainless steel
Connection:	Screw terminal max. 2.5 mm²
Cable gland:	Cable gland M 20 x 1.5 mm Cable diameter 5-13 mm
Connection area:	Increased Safety "e"
Drive:	Wheel and disc drive, motor in centre of gravity
Installation position:	As required
Mirror rotation rate:	180 r.p.m.
Service life of drive:	> 5,000 hrs
Duty cycle:	100 %
Fixing:	Base mounting, bracket mounting (accessory), tube mounting (accessory)
Explosion protection:	Ex II 2G Ex de IIC T3–T4 (depending on version) Ex II 2D Ex tD A21 IP 66 T 105 °C – T 150 °C (depending on version)
Approval:	PTB 06 ATEX 1039

Halogen bulb included in assembly. Bulb overview see pages P. 168 + 169.



Wire guard (accessory)



Clamp for tube mounting (accessory)



Mounting plate (accessory)



Bracket (accessory)

ORDER SPECIFICATIONS:

Voltage	24 V≂	24 V≂	115 V≂	230 V~	230 V~
Halogen bulb	20 W/24 V	35 W/24 V	35 W/12 V	20 W/12 V	35 W/12 V
Current consumption	900 mA	1,6 A	350 mA	110 mA	170 mA
Temperature Class (gas)	T4	T3	T3	T4	T3
Surface Temperature (dust)	105°C	150°C	150°C	105°C	150°C
red	**783 110 75**	**783 100 75**	**783 100 77**	**783 110 68**	**783 100 68**
yellow	**783 310 75**	**783 300 75**	**783 300 77**	**783 310 68**	**783 300 68**

ACCESSORIES:

Wire guard	**975 783 01**
Mounting plate	**975 783 02**
Clamp for tube mounting 1¼"	**975 783 03**
Clamp for tube mounting 1½"	**975 783 04**
Clamp for tube mounting 2"	**975 783 05**
Bracket	**975 783 06**

SPARE PARTS:

Halogen bulb 20 W/24 V for 24 V≂	**955 885 25**
Halogen bulb 20 W/12 V for 230 V~	**955 885 24**
Halogen bulb 35 W/24 V for 24 V≂	**955 883 35**
Halogen bulb 35 W/12 V for 115 V~, 230 V~	**955 883 34**

TECHNICAL DIAGRAMS:

see page 282

CE Ex | 2 G Zone 1 + 2 | 2 D Zone 21 + 22 | 4,6 kg | IP66 | +40°C -20°C

782 Ex LED Rotating Beacon



Ex LED Rotating Beacon
with wire guard (accessory)



- Suitable for use in gas and dust explosion endangered areas (Zone 1 and 2, Zone 21 and 22)
- Wear-free due to the absence of any moving mechanical components
- Intense rotating signal effect with low power consumption
- Connection area "e" for simple connection
- Can be mounted as required
- Salt water resistant

Life duration up to 50,000 hrs

TECHNICAL SPECIFICATIONS:

Dimensions (Ø x Height):	209 mm x 315 mm
Housing:	Aluminium
Lens:	Reinforced borosilicate glass
Mounting Plate:	VA stainless steel
Connection:	Screw terminal max. 2.5 mm²
Cable entry:	Cable gland M 20 x 1.5 mm Cable diameter 5-13 mm
Connection area:	Increased Safety "e"
Installation position:	As required
Fixing:	Base mounting, bracket mounting (accessory), tube mounting (accessory)
Rotation rate:	c. 180 r.p.m.
Duty cycle:	100 %
Explosion protection:	Ⓔx II 2G Ex de IIC T6 Ⓔx II 2D Ex tD A21 IP 66 T 80 °C
Approval:	PTB 06 ATEX 1039

ORDER SPECIFICATIONS:

Voltage	24 V ⎓	115-230 V ~
Current consumption	150 mA	70-180 mA
red	**782 120 55**	**782 120 68**
yellow	**782 320 55**	**782 320 68**

ACCESSORIES:

Wire guard	**975 783 01**
Mounting plate	**975 783 02**
Clamp for tube mounting 11/4"	**975 783 03**
Clamp for tube mounting 11/2"	**975 783 04**
Clamp for tube mounting 2"	**975 783 05**
Bracket	**975 783 06**

(Accessories see page 257)

TECHNICAL DIAGRAMS:

see page 281



Generates a distinctive rotating signal by triggering high output LEDs in sequence

CE Ⓔx | 2 G Zone 1 + 2 | 2 D Zone 21 + 22 | 4,4 kg | IP66 | +50°C -20°C

WERMA SIGNALTECHNIK

784 Ex Revolving Signal Beacon



- Suitable for use in gas and dust explosion endangered areas (Zone 1 and 2, Zone 21 and 22)
- 3 Fresnel lenses effect light convergence and optimise visibility
- Can be mounted as required
- Low rotation rate and long life duration thanks to low wear wheel and disc drive
- Flame-proof enclosure "d" with "e"connection area
- Salt water resistant

TECHNICAL SPECIFICATIONS:

Dimensions (Ø x Height):	209 mm x 315 mm
Housing:	Aluminium
Lens:	Reinforced borosilicate glass
Mounting Plate:	VA stainless steel
Connection:	Screw terminal max. 2.5 mm²
Cable gland:	Cable gland M 20 x 1.5 mm Cable diameter 5-13 mm
Connection area:	Increased Safety "e"
Drive:	Wheel and disc drive, motor in centre of gravity
Installation position:	As required
Halogen bulb:	GY 6.35 35 W 12 V / 24 V
Lens rotation rate:	60 r.p.m.
Service life of drive:	> 5,000 hrs
Duty cycle:	100 %
Fixing:	Base mounting, bracket mounting (accessory), tube mounting (accessory)
Explosion protection:	Ⓔx II 2G Ex de IIC T4 Ⓔx II 2D Ex tD A21 IP 66 T 105 °C
Approval :	PTB 06 ATEX 1039

Halogen bulb included in assembly. Bulb overview see pages 168 + 169.



Wire guard (accessory)



Clamp for tube mounting (accessory)



Mounting plate (accessory)



Bracket (accessory)

ORDER SPECIFICATIONS:

Voltage	24 V≂	115 V≂	230 V~
Current consumption	1,6 A	350 mA	170 mA
red	**784 100 75**	**784 100 77**	**784 100 68**
yellow	**784 300 75**	**784 300 77**	**784 300 68**

ACCESSORIES:

Wire guard	**975 783 01**
Mounting plate	**975 783 02**
Clamp for tube mounting 1¼"	**975 783 03**
Clamp for tube mounting 1½"	**975 783 04**
Clamp for tube mounting 2"	**975 783 05**
Bracket	**975 783 06**

SPARE PARTS:

Halogen bulb 35 W/24 V for 24 V≂	**955 883 35**
Halogen bulb 35 W/12 V for 115 V~, 230 V~	**955 883 34**

TECHNICAL DIAGRAMS:

see page 282

CE Ⓔx | 2 G Zone 1 + 2 | 2 D Zone 21 + 22 | 4,6 kg | IP66 | +40°C -20°C

738 Ex Double Flash Beacon



- Suitable for use in gas and dust explosion endangered areas (Zone 1 and 2, Zone 21 and 22)
- Flame-proof enclosure "d" with "e" connection area
- High flash power from two consecutive flashes
- Can be mounted as required
- Salt water resistant

TECHNICAL SPECIFICATIONS:

Dimensions (Ø x Height):	209 mm x 315 mm
Housing:	Aluminium
Lens:	Reinforced borosilicate glass
Mounting Plate:	VA stainless steel
Connection:	Screw terminal max. 2.5 mm^2
Cable gland:	Cable gland M 20 x 1.5 mm Cable diameter 5-13 mm
Connection area:	Increased Safety "e"
Installation position:	As required
Flash energy:	15 Ws
Flash frequency::	1 Hz
Life duration:	4 x 10^6 flashes
Fixing:	Base mounting, bracket mounting (accessory), tube mounting (accessory)
Explosion protection:	Ⓔx II 2G Ex de IIC T5 Ⓔx II 2D Ex tD A21 IP 66 T 85 °C – T 90 °C (depending on the voltage)
Approval:	PTB 06 ATEX 1039

ORDER SPECIFICATIONS:

Voltage	24 V ⎓	115 V ~	230 V ~
Current consumption	700 mA	300 mA	200 mA
Surface Temp. (dust)	85 °C	90 °C	85 °C
red	**738 100 55**	**738 100 67**	**738 100 68**
yellow	**738 300 55**	**738 300 67**	**738 300 68**



Wire guard (accessory)



Clamp for tube mounting (accessory)



Mounting plate (accessory)



Bracket (accessory)

ACCESSORIES:

Wire guard	**975 783 01**
Mounting plate	**975 783 02**
Clamp for tube mounting 1 1/4"	**975 783 03**
Clamp for tube mounting 1 1/2"	**975 783 04**
Clamp for tube mounting 2"	**975 783 05**
Bracket	**975 783 06**

TECHNICAL DIAGRAMS:

see page 282



The Ex Double Flash Beacon 782 provides signalling in a range of different explosion protected areas

CE Ⓔx | 2 G Zone 1 + 2 | 2 D Zone 21 + 22 | 4,4 kg | IP66 | +40°C -20°C | 15 Ws

WERMA SIGNALTECHNIK

720 Ex Flashing Beacon



NEW
- Zone 1 and 2
- Zone 21 and 22
- Compact flashing beacon
- Improved temperature range

TECHNICAL SPECIFICATIONS:

Dimensions (L x H x W):	110 mm x 285 mm x 129 mm
Housing:	Aluminium
Lens:	Reinforced borosilicate glass
Wire guard:	Rust-proof steel, powder-coated
Connection:	Screwable 1.5 mm² fine-strand, 2.5 mm² single-wire
Cable entry:	Cable gland M 20 x 1.5 mm Cable diameter 6-9 mm
Life duration:	5 x 10^6 flashes
Explosion protection:	Ⓔx II 2G Ex de IIC T*) *) T6 -40 °C ≤ Ta ≤ +40 °C *) T5 -40 °C ≤ Ta ≤ +55 °C Ⓔx II 2D Ex tD A21 IP 66 / IP 67 T80 °C
Approval:	PTB 01 ATEX 1057
Fixing:	Bracket mounting
Flash energy:	c. 15 Ws
Flash frequency:	1 Hz



ORDER SPECIFICATIONS:

Voltage	24 V⎓	230 V~
Current consumption	1 A	200 mA
red	**720 101 55**	**720 101 68**
yellow	**720 301 55**	**720 301 68**

TECHNICAL DIAGRAMS:

see page 280

CE Ⓔx | 2 G Zone 1 + 2 | 2 D Zone 21 + 22 | 2 kg | IP67 | +40°C -40°C | 15 Ws

718 Ex Electronic Installation Buzzer



- **Zone 1 and 2**
- **Intrinsically safe Ex installation buzzer**
- **For use with a Zener Barrier**
- **IP 43 with cap**
- **Low current consumption**
- **Continuous tone**

Play Sound www.werma.com

TECHNICAL SPECIFICATIONS:

Dimensions (Ø x Height):	43 mm x 13 mm (Protrusion from panel)		
Housing:	ABS		
Connection:	Spades 6.3 x 0.8 mm		
Audio frequency:	c. 2,400 Hz		
Duty cycle:	100 %		
Explosion protection:	Ex II 2G Ex ib IIC T4 / T5 / T6		
Approval:	DMT 98 ATEX E 005 X		
Maximum values of the Zener barrier:	Ui: 40 V ⎓ , Ii: 660 mA		
Minimum values of the Zener barrier:	for 24 V ⎓		
	15 V ⎓ / 20 mA		
Maximum Input Power Pi:	Temp.-classes	Max. surrounding temperature + 40°C	+ 50°C	+ 60°C
	T4	Pi = 1.3 W	Pi = 1.2 W	Pi = 1.0 W
	T5	Pi = 0.82 W	Pi = 0.66 W	Pi = 0.52 W
	T6	Pi = 0.6 W	Pi = 0.45 W	Pi = 0.3 W



Cap (accessory)

ORDER SPECIFICATIONS:

Voltage	24 V ⎓
Current consumption	20 mA
	718 000 55



Zener Barrier (accessory)

ACCESSORIES:

PC/ABS-Blend Cap (IP 43)	**975 118 00**
Zener Barrier	**975 714 01**

TECHNICAL DIAGRAMS:

see page 279

with cap

CE Ex | 2 G / Zone 1 + 2 | 50 g | IP30 | IP43 | +60°C / -20°C | 90 dB

WERMA SIGNALTECHNIK

714 Ex Multi-Tone Sounder

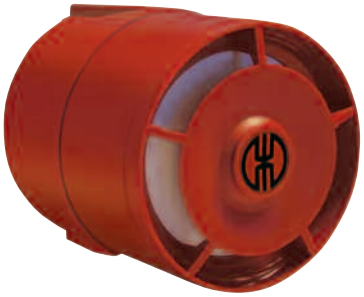





Zener Barrier (accessory)

- Zone 0, 1 and 2
- 26 tones for a diverse range of applications
- For use with a Zener Barrier
- Adjustable sound output to 103 dB
- High protection rating IP 65
- Direct external setting of two tones possible

TECHNICAL SPECIFICATIONS:

Dimensions (Ø x Height):	93 mm x 103 mm
Housing:	ABS
Connection:	Screw terminal max. 2.5 mm²
Cable entry:	Cable diameter max. 12 mm
Duty cycle:	100%
Tone types and frequencies:	Selectable via DIP switch, see table below
Fixing:	Wall mounting, base mounting
Installation position:	Sound outlet must not face upwards
Explosion protection:	Ⓔx II 1G EEx ia IIC T4
Approval:	BASEEFA 06 ATEX 0161

ORDER SPECIFICATIONS:

Voltage	24 V ⎓
Current consumption	14 mA
	714 000 55

ACCESSORIES:

Zener Barrier	**975 714 01**

TONE TYPES AND FREQUENCIES:

Play Sound www.werma.com

selectable via DIP switch

Ton A No.	Tone type	Ton A No.	Tone type
1	alternating 800/970 Hz in 2 Hz stroke	14	continuous 970 Hz
2	rising 800/970 Hz in 7 Hz stroke	15	554 Hz/100 ms alternating 440 Hz/400 ms
3	rising 800/970 Hz in 1 Hz stroke	16	660 Hz pulse: 150 ms ON, 150 ms OFF
4	continuous 2,850 Hz	17	660 Hz pulse: 1.8 sec. ON, 1.8 sec OFF
5	rising 2,400-2,850 Hz in 7 Hz stroke	18	660 Hz pulse: 6.5 sec. ON, 13 sec OFF
6	rising 2,400-2,850 Hz in 1 Hz stroke	19	continuous 660 Hz
7	500-1,200 Hz rising in 3 sec., 0.5 sec OFF	20	alternating 554/440 Hz in 0.5 Hz stroke
8	falling 1,200-500 Hz in 1 Hz stroke	21	pulse 660 Hz in 1Hz stroke
9	alternating 2,400/2,850 Hz in 2 Hz stroke	22	2,850 Hz pulse: 150 ms ON / 100 ms OFF
10	pulse 970 Hz in 0.5 Hz stroke	23	rising 800/970 Hz in 50 Hz stroke
11	alternating 800/970 Hz in 1 Hz stroke	24	rising 2,400-2,850 Hz in 50 Hz stroke
12	pulse 2,850 Hz in 0.5 Hz stroke	25	970 Hz pulse: 3 x 500 ms ON, 500 ms OFF, 1.5 sec. pause
13	970 Hz pulse: 0.25 sec. ON / 1 sec. OFF	26	2,850 Hz pulse: 3 x 500 ms ON, 500 ms OFF, 1.5 sec. pause

TECHNICAL DIAGRAMS:

see page 279

CE Ⓔx | 1 G Zone 0, 1 + 2 | 300 g | IP 65 | +55°C -20°C | 103 dB | 26

750 Ex Signal Horn



- Zone 1 and 2
- Fully encapsulated
- Silicone free

TECHNICAL SPECIFICATIONS:

Play Sound www.werma.com

Dimensions (L x H x W):	148 mm x 360 mm x 152 mm
Housing:	PC / ABS-Blend
Connection:	Cable 3 m, 2 x 0.75 mm²
Fixing:	Bracket mounting, sound outlet facing downwards
Explosion protection	Ex II 2G Ex mb II T5
Approval:	BVS 03 ATEX E 118X

ORDER SPECIFICATIONS:

Voltage	24 V ⎓	24 V ~	48 V ~	115 V ~		230 V ~
Voltage range	21,6 V ... 26,4 V	21,6 V ... 26,4 V	37,8 V ... 52,8 V	102,5 V ... 126,5 V (50 Hz)	108 V ... 131 V (60 Hz)	208 V ... 250 V (50 Hz)
Current consumpt.	350 mA	450 mA	220 mA	205 mA		70 mA
	750 000 55	**750 000 65**	**750 000 66**	**750 000 67**		**750 000 68**

TECHNICAL DIAGRAMS:

see page 281



The Ex Signal Horn 750 warns of imminent danger in the chemical industry and paint shops

CE Ex | 2 G / Zone 1 + 2 | 1,3 kg | IP55 | +50°C / -40°C | 105 dB

761 Ex Signal Horn



- Zone 1 and 2, Zone 21 and 22
- IP 65 for indoor and outdoor applications
- Flexible mounting possibilities
- Suitable for use in areas liable to explosion caused by both gas or dust without the need for additional accessories

TECHNICAL SPECIFICATIONS:

Play Sound www.werma.com

Dimensions (L x H x W):	178 mm x 104 mm x 207 mm
Fixing dimensions (L x H):	130 mm x 160 mm
Housing:	PC
Connection:	CAGE CLAMP® max. 2.5 mm²
Cable entry:	Cable gland M 16 x 1.5 mm Cable diameter 6.5-9.5 mm
Fixing:	Wall mounting, base mounting
Explosion protection:	Ex II 2G Ex emb II T5 Ex II 2D Ex td A21 IP65 T70°C
Approval:	BVS 03 ATEX E 118X

ORDER SPECIFICATIONS:

Voltage	24 V ⎓	24 V ~	48 V ~	115 V ~		230 V ~
Voltage range	21.6 V ... 26.4 V	21.6 V ... 26.4 V	37.8 V ... 52.8 V	102.5 V ... 126.5 V (50 Hz)	108 V ... 131 V (60 Hz)	208 V ... 250 V (50 Hz)
Current consumpt.	350 mA	450 mA	220 mA	205 mA		70 mA
	761 000 55	**761 000 65**	**761 000 66**	**761 000 67**		**761 000 68**

TECHNICAL DIAGRAMS:

see page 281



The Ex signal horn 761 can be used for a range of applications in gas and dust explosion endangered areas, e.g. in joinery and wood processing plants.

CE Ex | 2 G Zone 1 + 2 | 2 D Zone 21 + 22 | 1,3 kg | IP65 | +50°C -40°C | max. 105 dB


Datum
Name
Werkstoff
K10/246/246/27/1730
HASCO
Aufspannplatte AS
0778.0
Maße ohne Toleranzangabe:
Bohrungskoordinaten: ±0.01
Stiftbohrungskoordinaten: ±0.01
SIGNALTECH
6 800 201 51
Ersatz für –
Ersetzt durch –

Our Technical Diagrams

On the following pages you will find the technical diagrams for our products. The dimensions are always stated in millimetres. Please note that the diagrams are not to scale.

Reference on the product page

In order to be able to find the technical diagrams for your desired product even more quickly, there is a reference on the relevant product page stating the page number for the corresponding diagram located in the "Technical diagrams" section



Layout of the technical diagrams

The technical diagrams are in the numerical order of the first three digits of the article number.

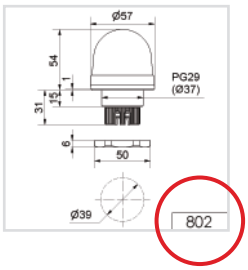

Technical diagrams for accessories

The technical diagrams for our extensive accessories are in numerical order of to the full article number (from page 292 onwards).

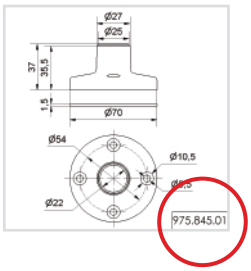

Digital data

You are welcome to request the technical diagrams in digital form. The relevant 3D models, instruction leaflets and connection diagrams can be obtained from us or downloaded from our homepage at any time.

Simply select the desired product or search for it by article number, then download the file and save it locally for your further use.



Technical Diagrams

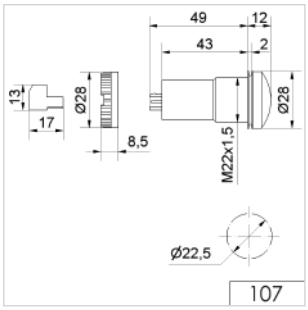

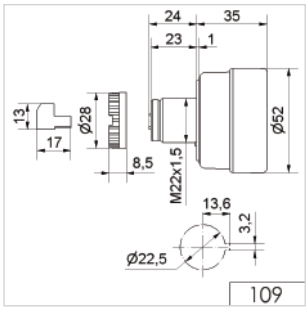

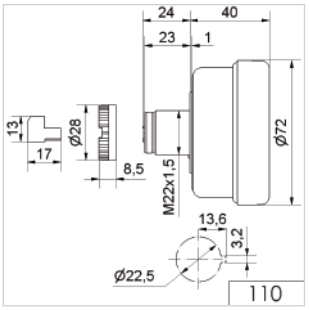

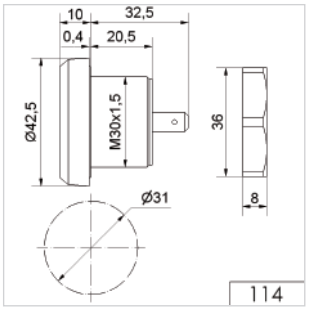

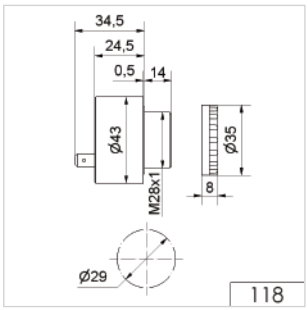

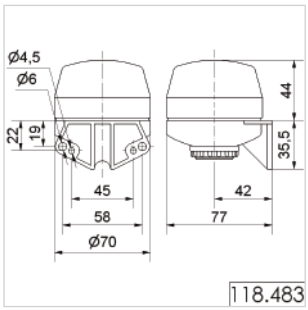

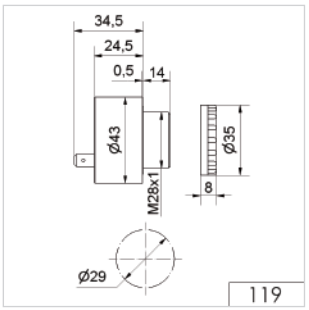

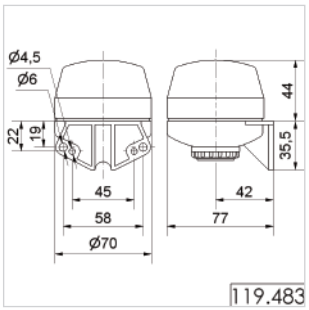

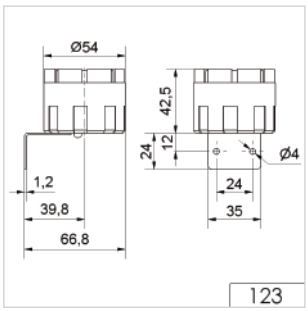

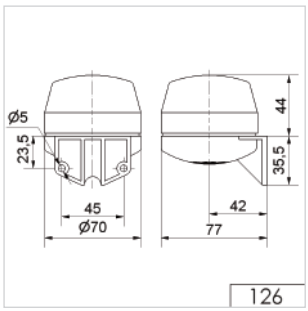

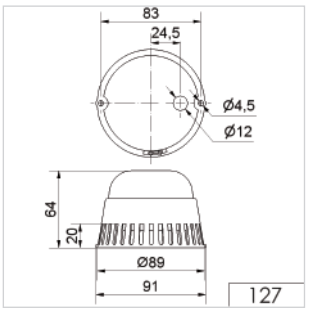

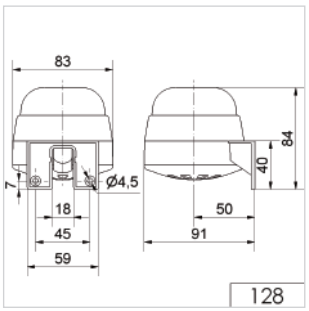

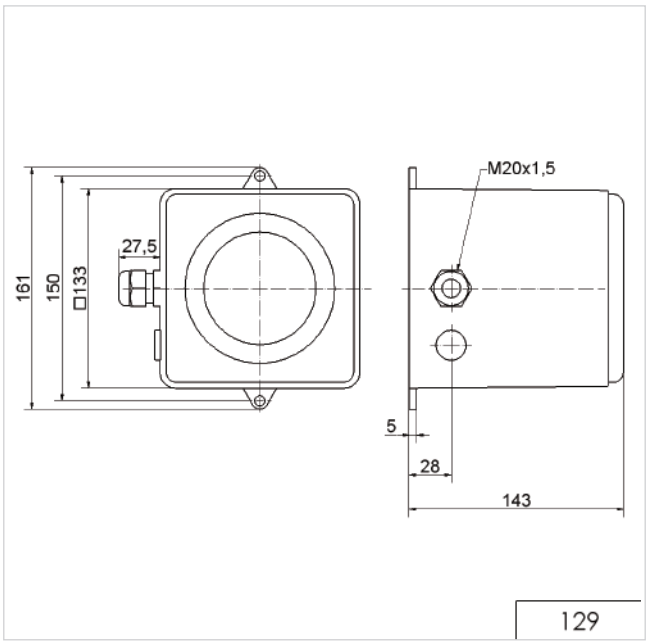

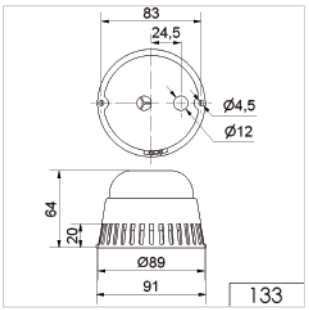

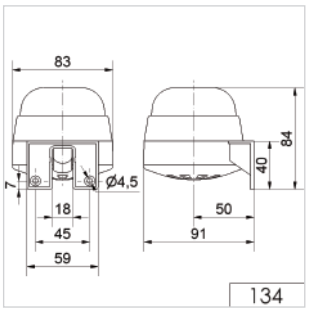

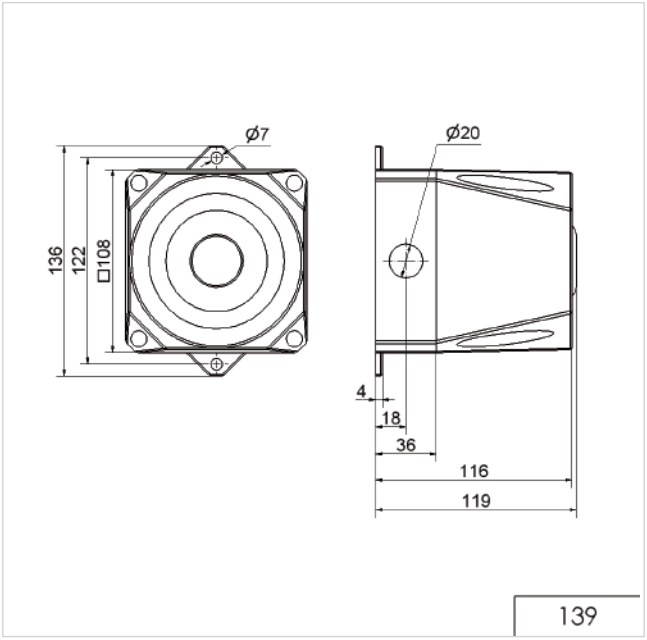

139

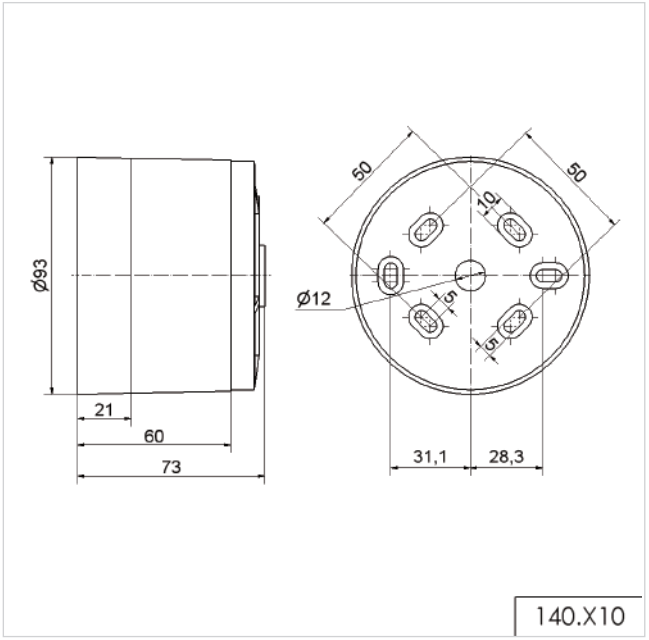

140.X10

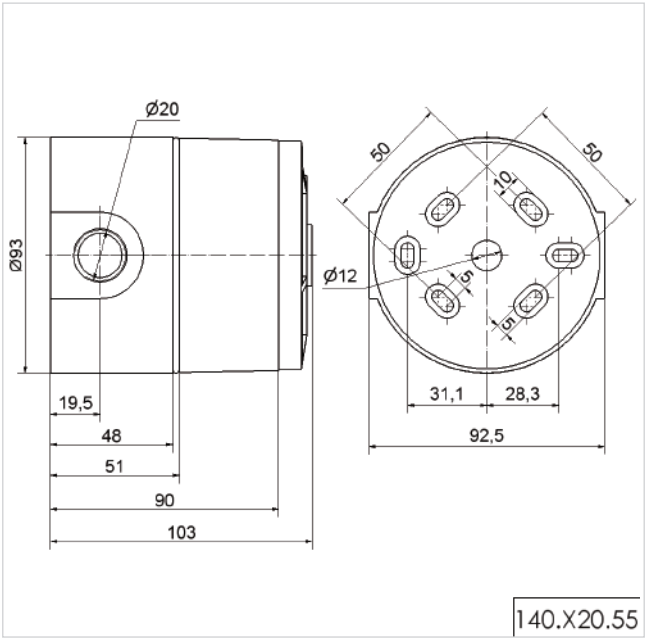

140.X20.55

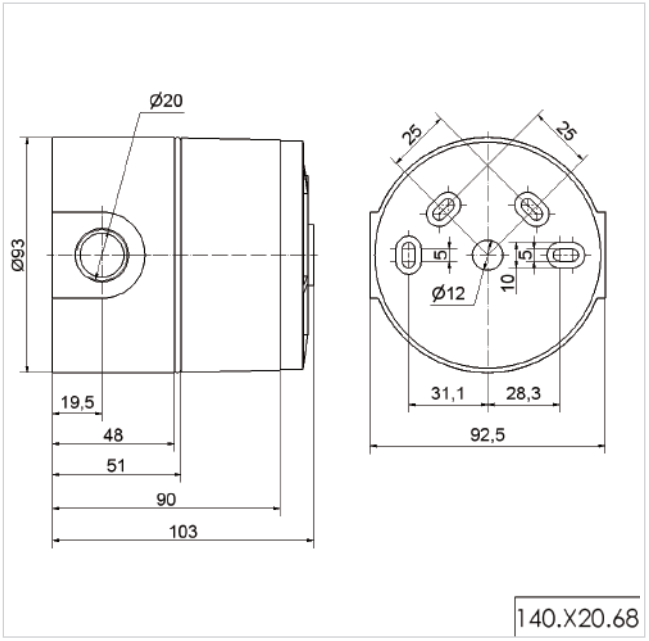

140.X20.68

ADDITIONAL INFORMATION:

You are welcome to request the technical diagrams in digital form. The relevant 3D models, instruction leaflets and connection diagrams can be obtained from us or downloaded from our homepage at any time.

Technical Diagrams

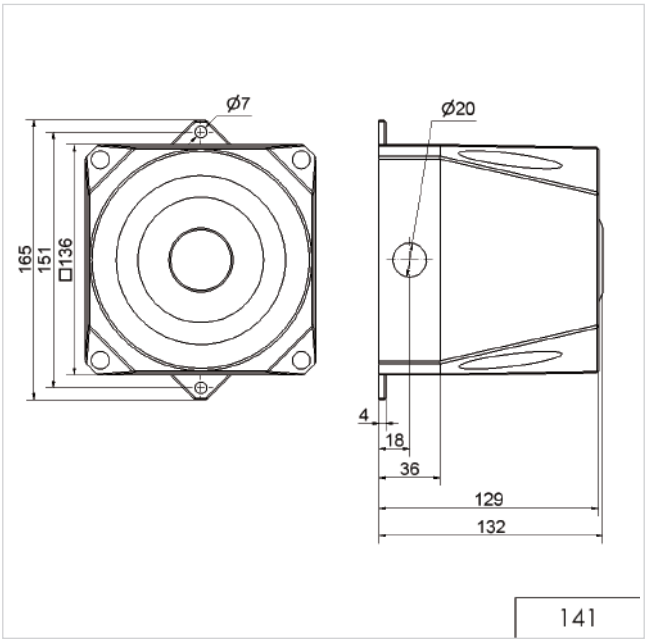

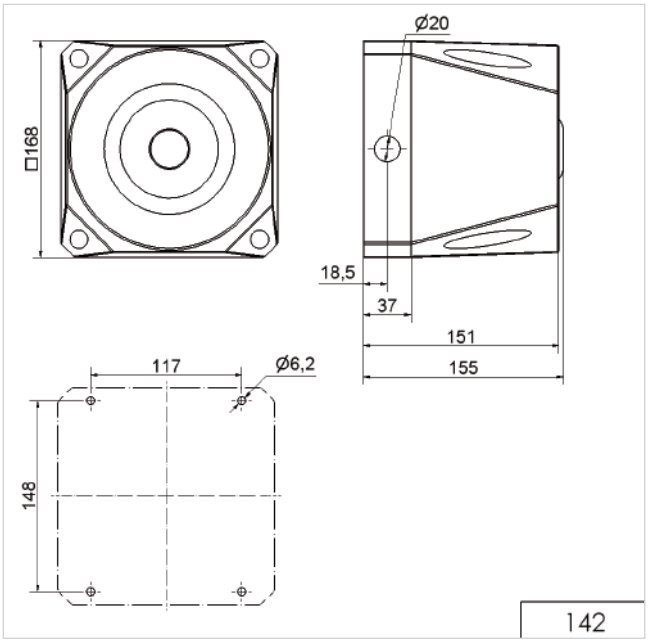

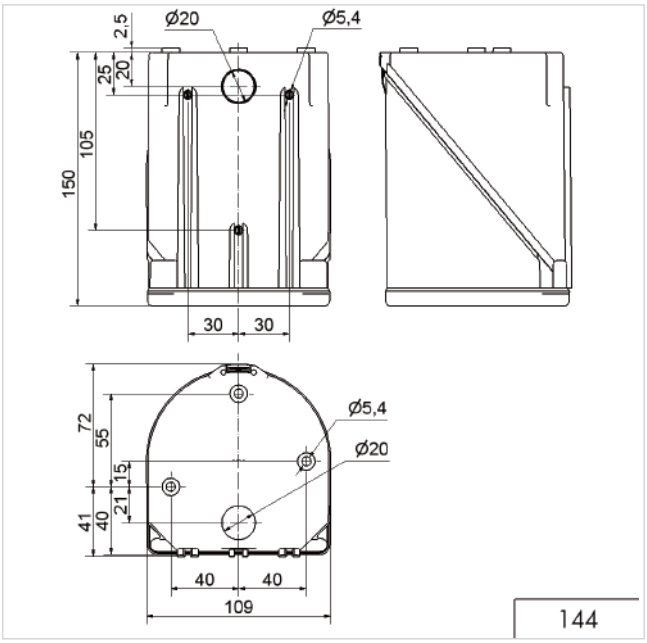

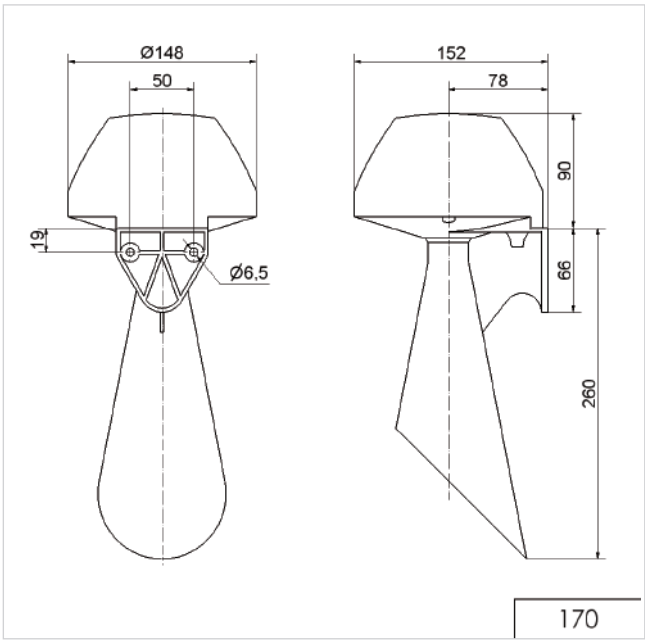

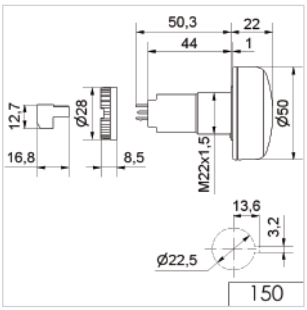

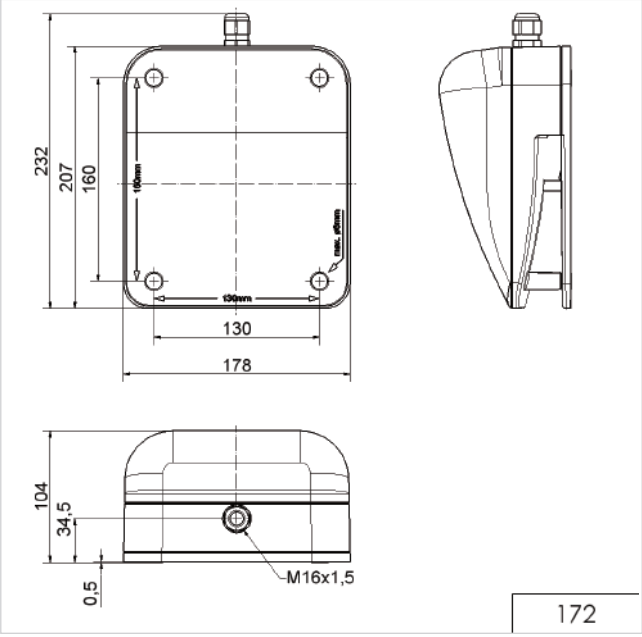

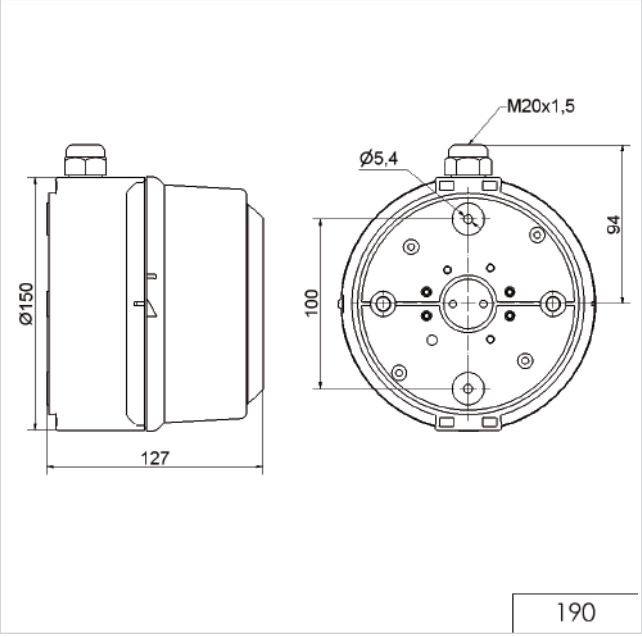

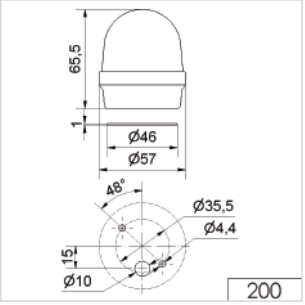

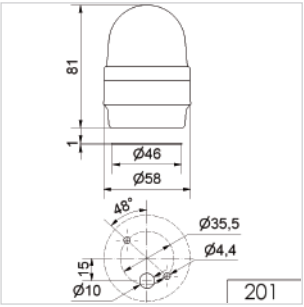

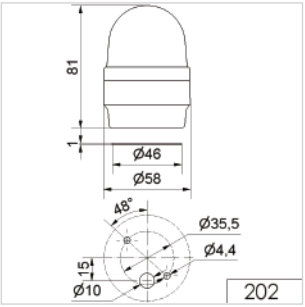

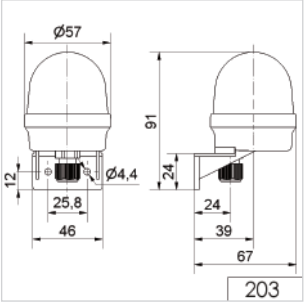

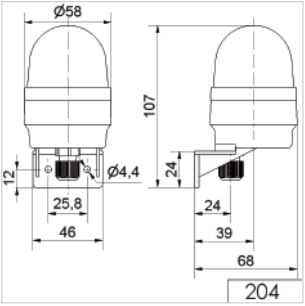

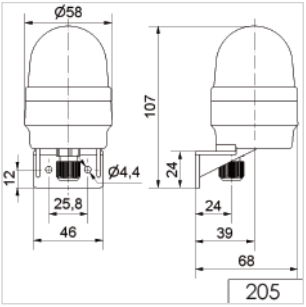

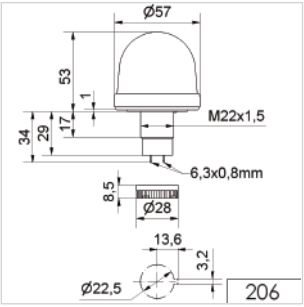

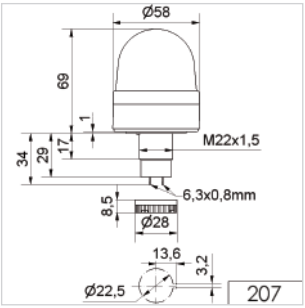

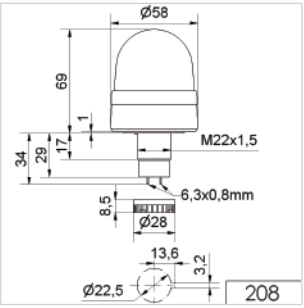

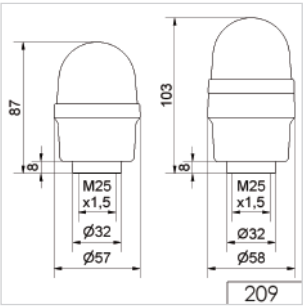

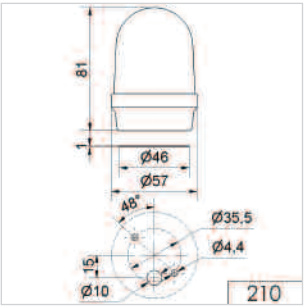

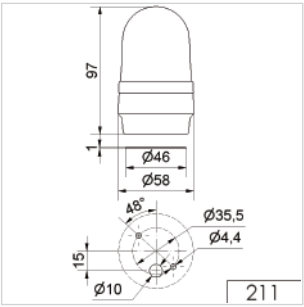

ADDITIONAL INFORMATION:

You are welcome to request the technical diagrams in digital form. The relevant 3D models, instruction leaflets and connection diagrams can be obtained from us or downloaded from our homepage at any time.

Technical Diagrams

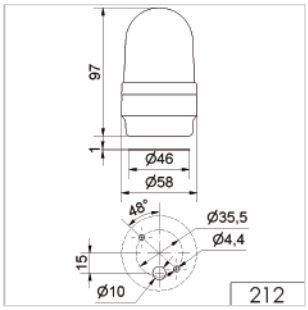

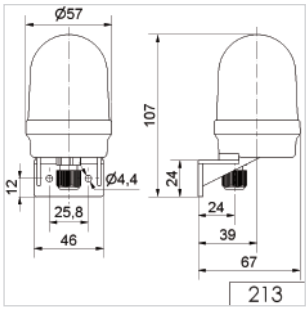

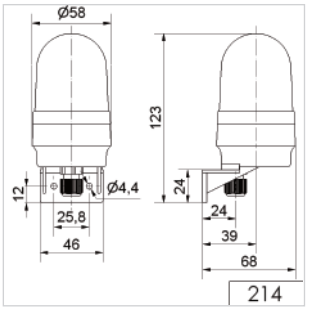

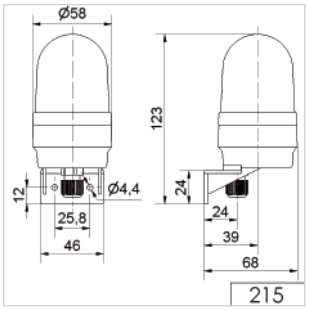

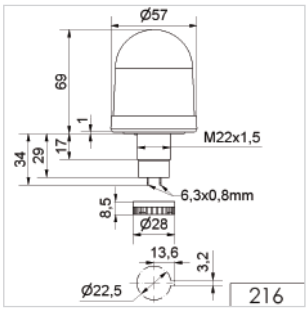

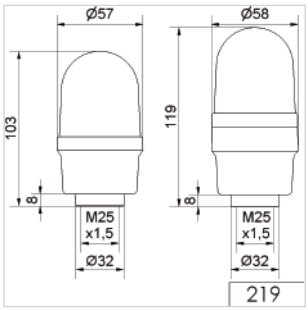

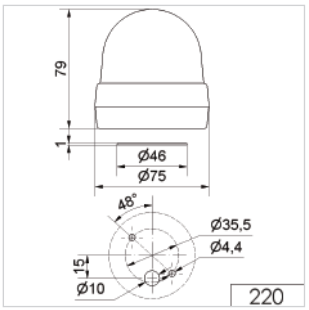

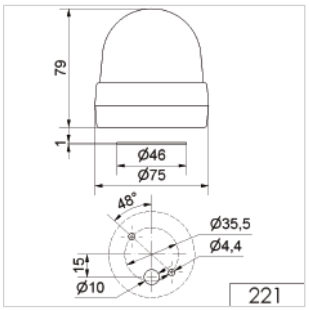

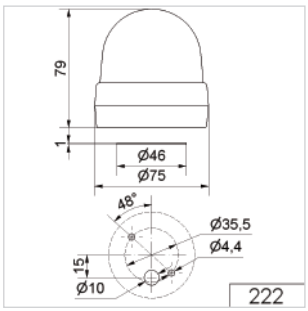

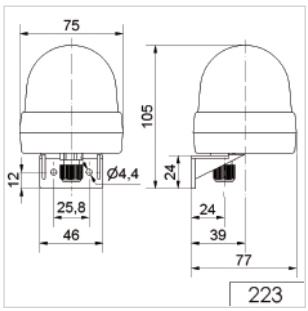

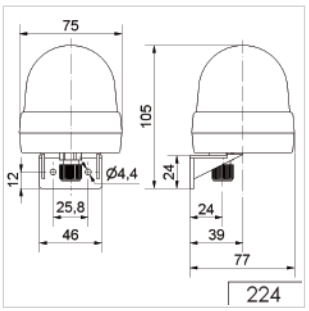

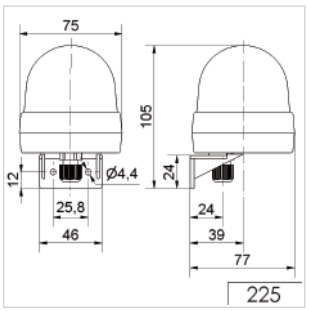

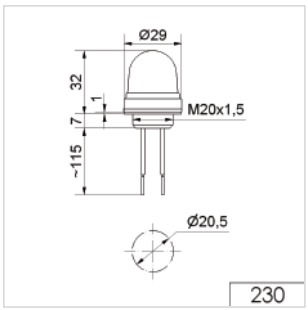

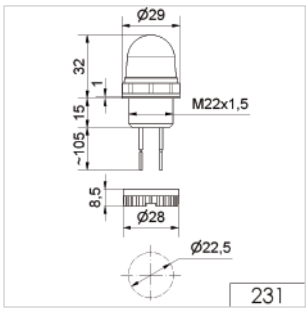

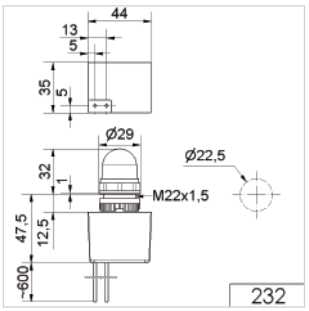

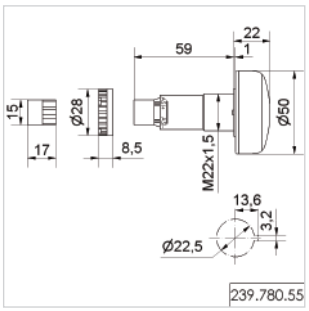

WERMA SIGNALTECHNIK

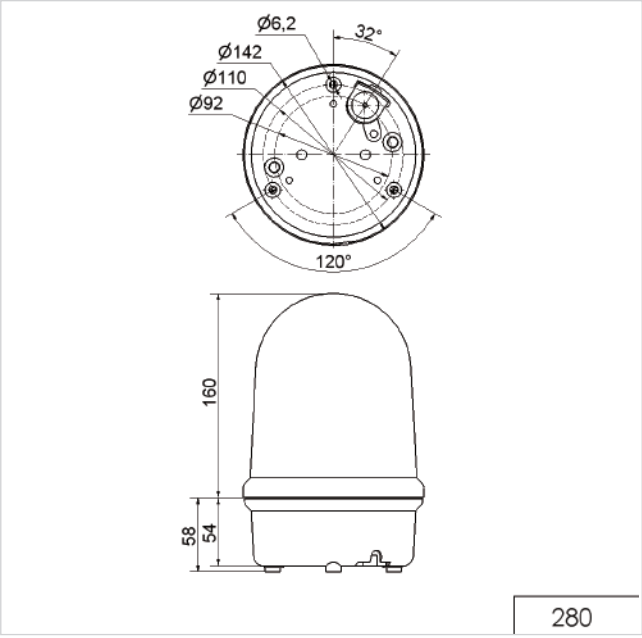

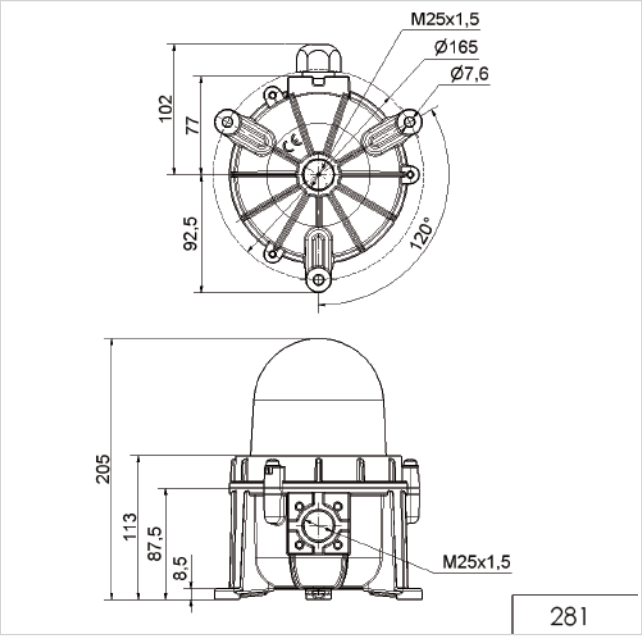

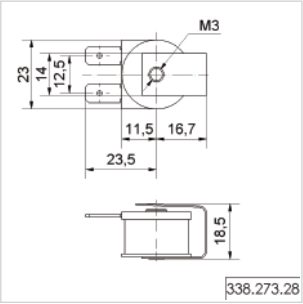

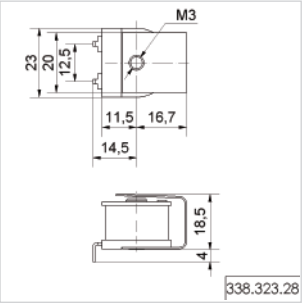

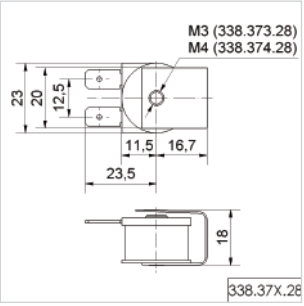

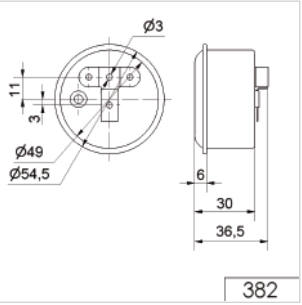

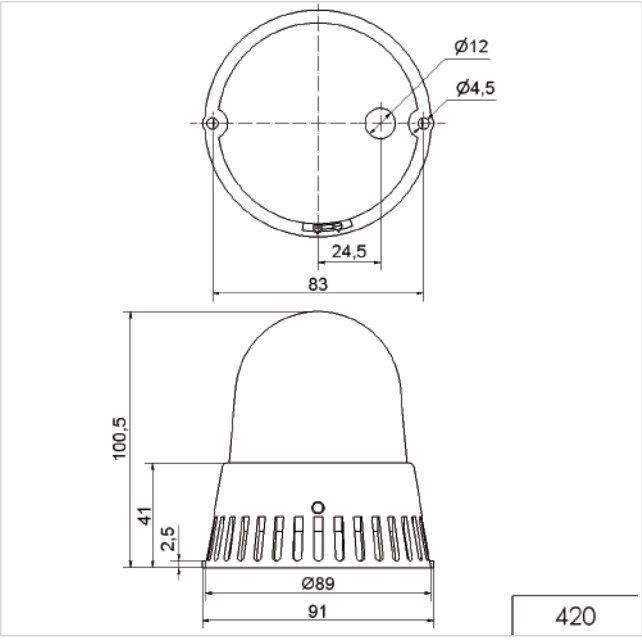

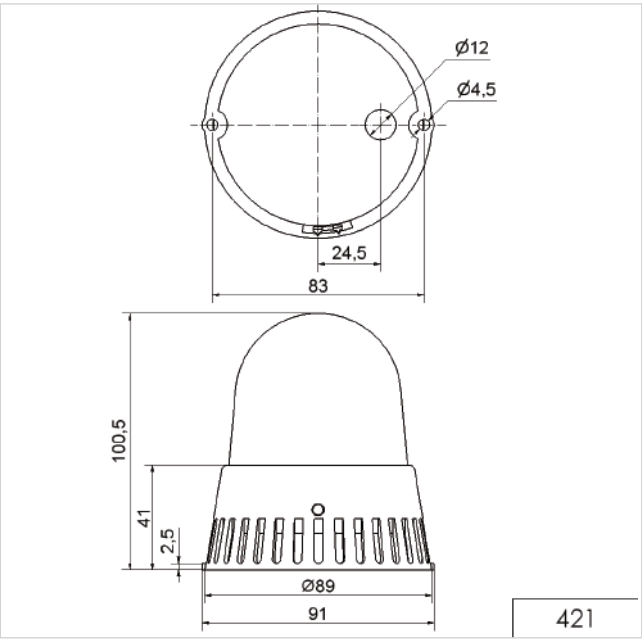

ADDITIONAL INFORMATION:

You are welcome to request the technical diagrams in digital form. The relevant 3D models, instruction leaflets and connection diagrams can be obtained from us or downloaded from our homepage at any time.

Technical Diagrams

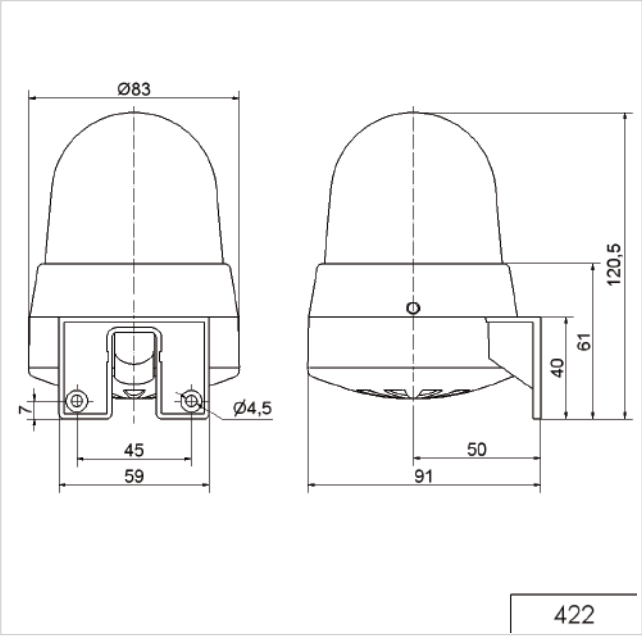

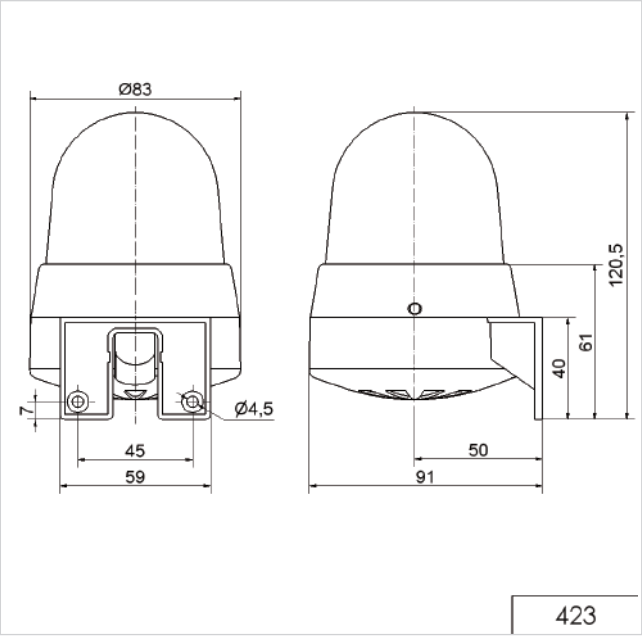

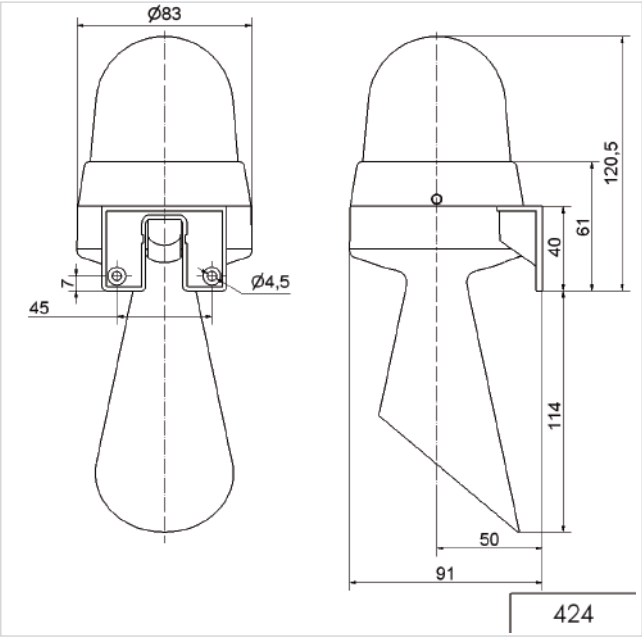

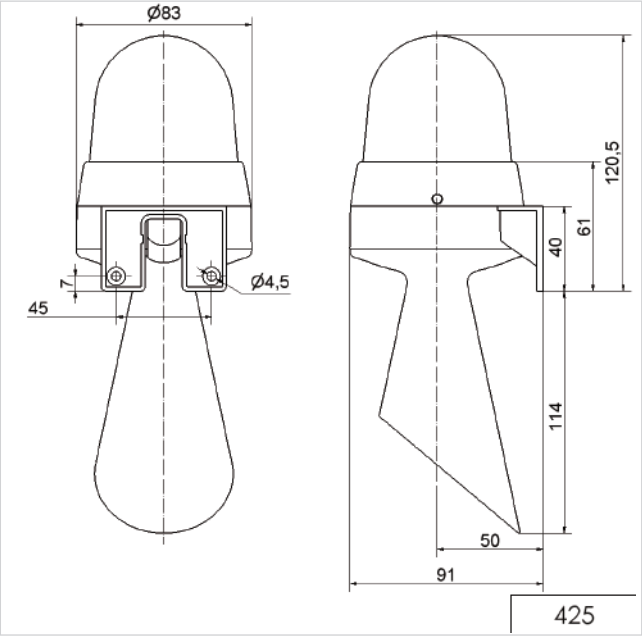

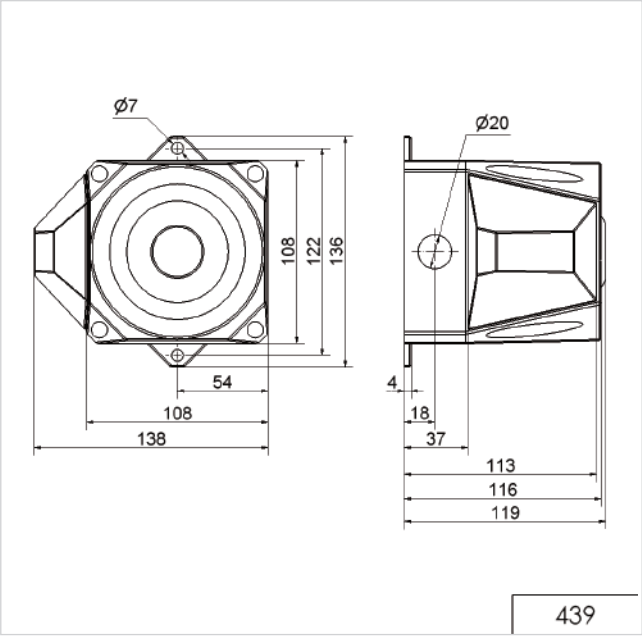

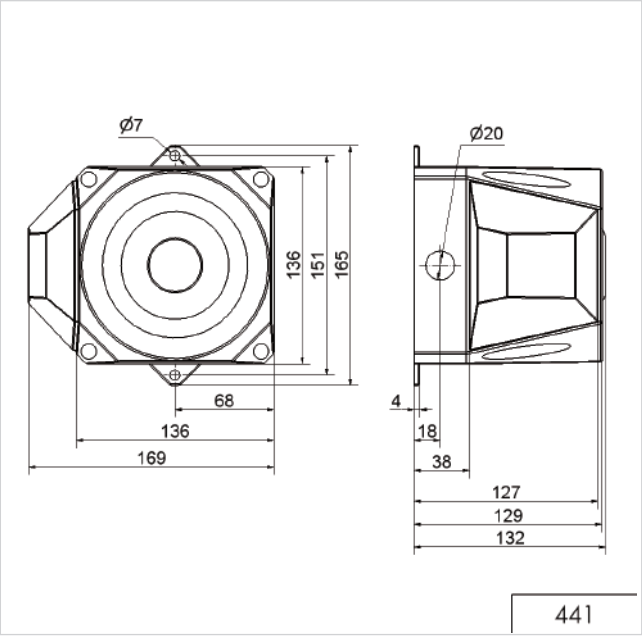

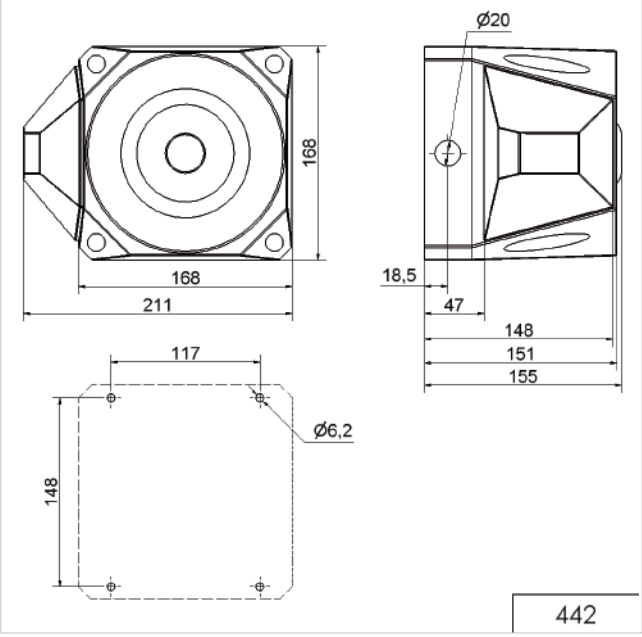

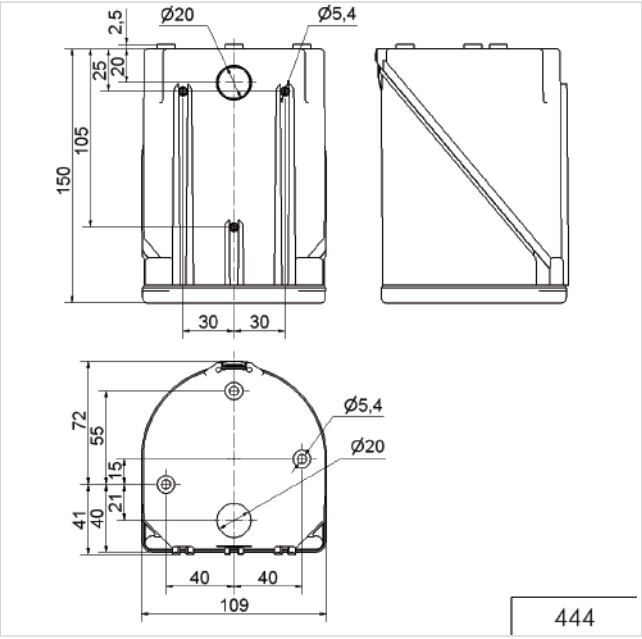

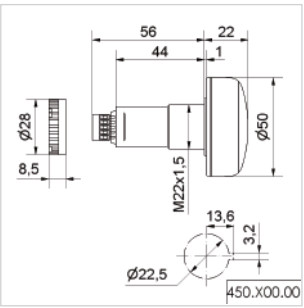

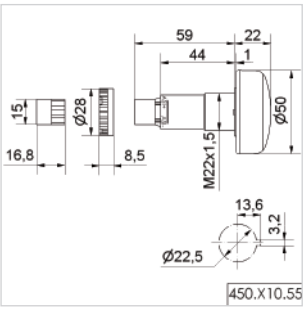

ADDITIONAL INFORMATION:

You are welcome to request the technical diagrams in digital form. The relevant 3D models, instruction leaflets and connection diagrams can be obtained from us or downloaded from our homepage at any time.

Technical Diagrams

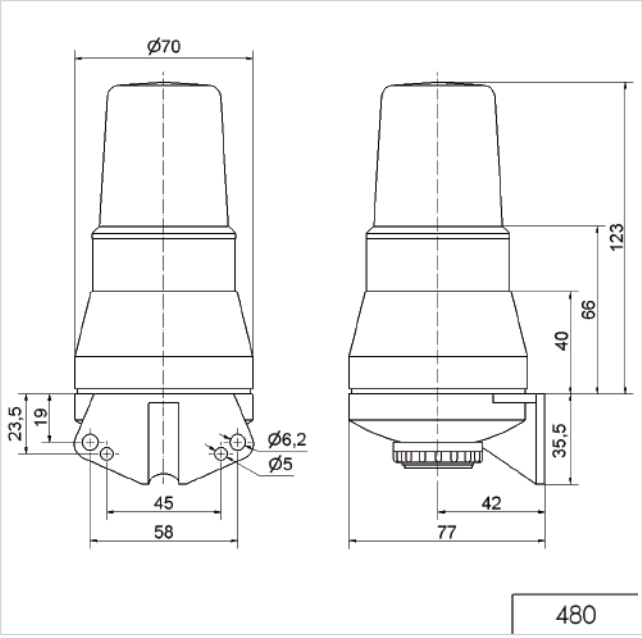

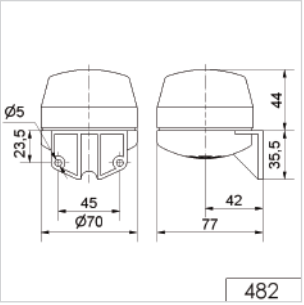

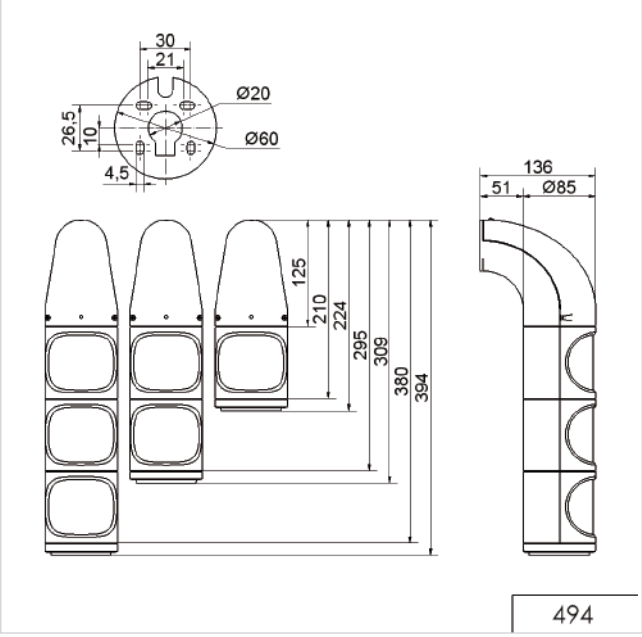

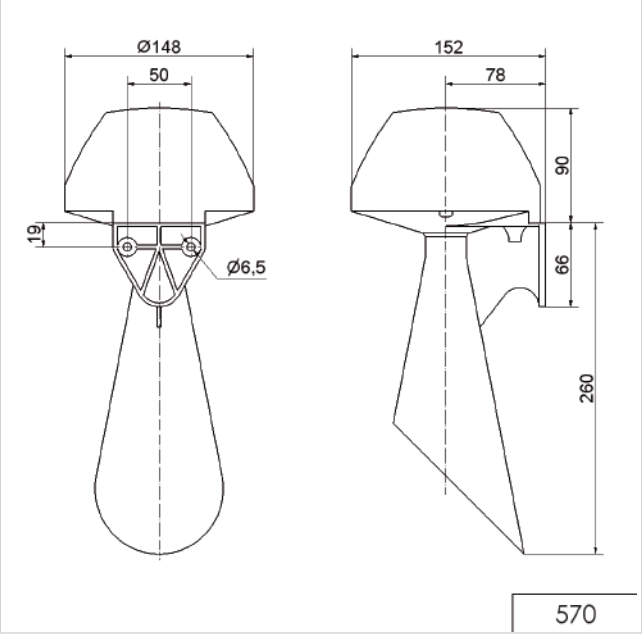

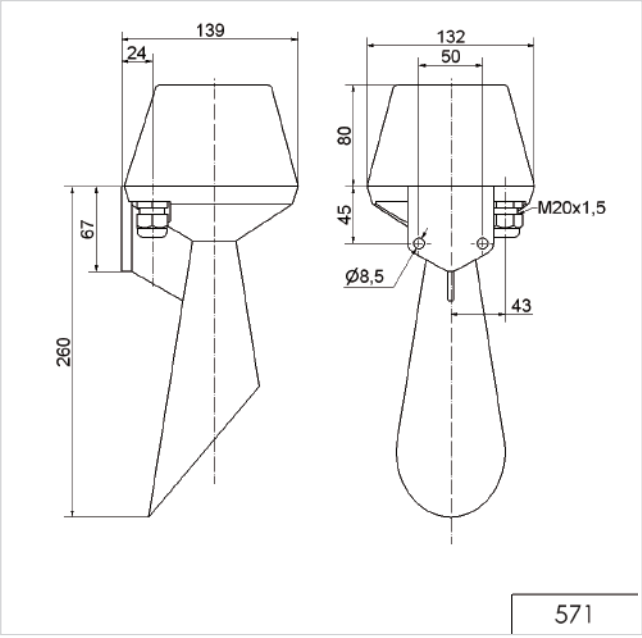

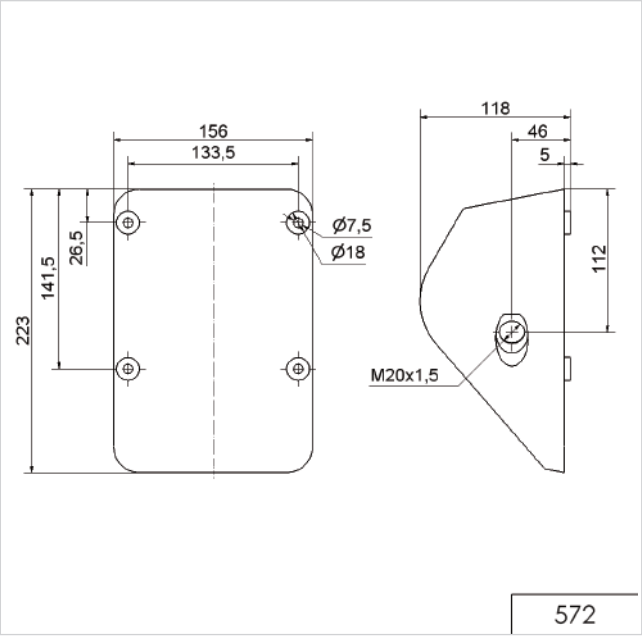

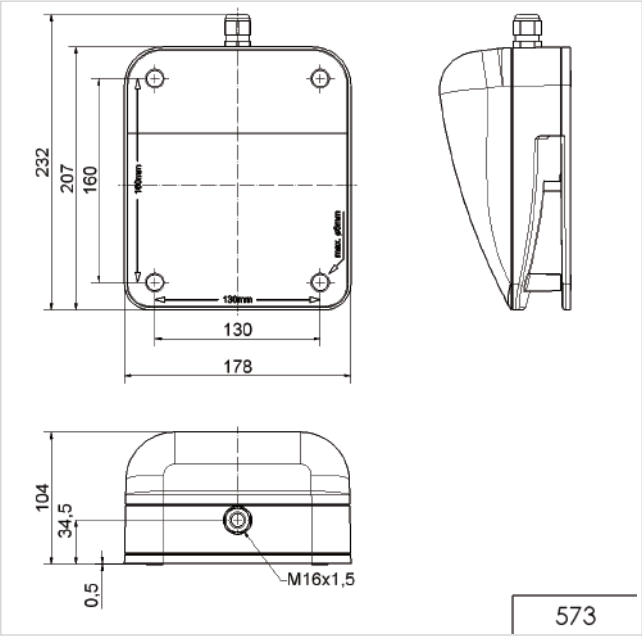

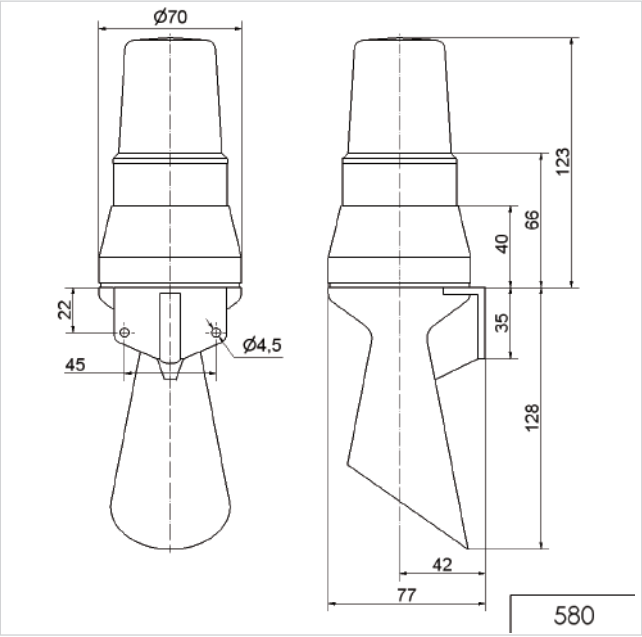

Technical Diagrams

ADDITIONAL INFORMATION:

You are welcome to request the technical diagrams in digital form. The relevant 3D models, instruction leaflets and connection diagrams can be obtained from us or downloaded from our homepage at any time.

Technical Diagrams

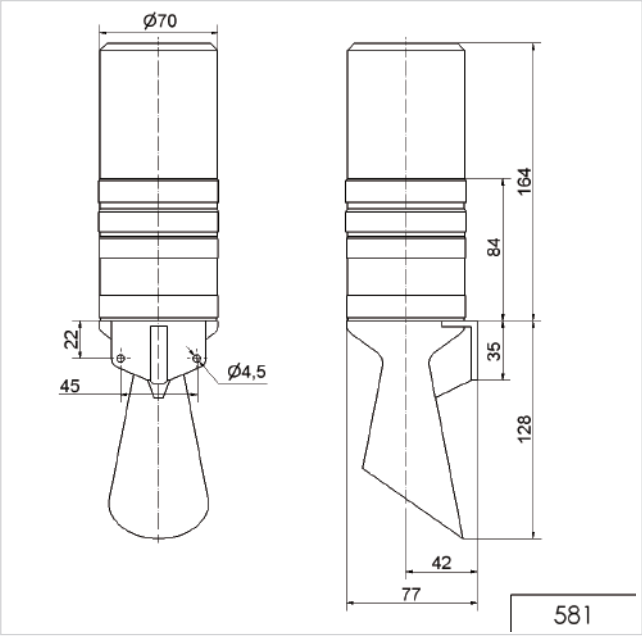

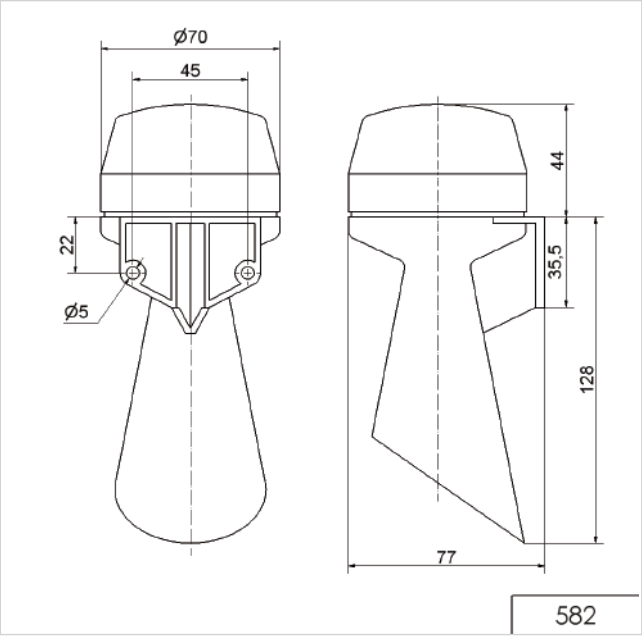

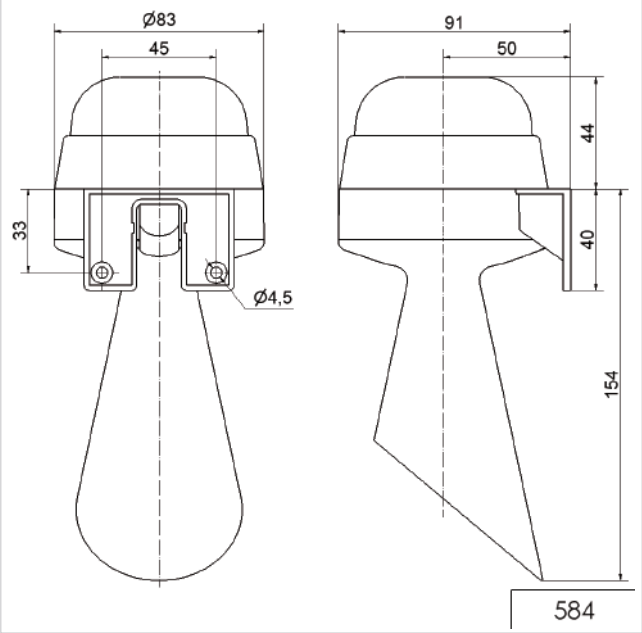

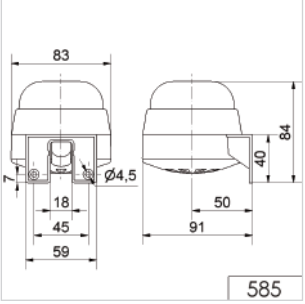

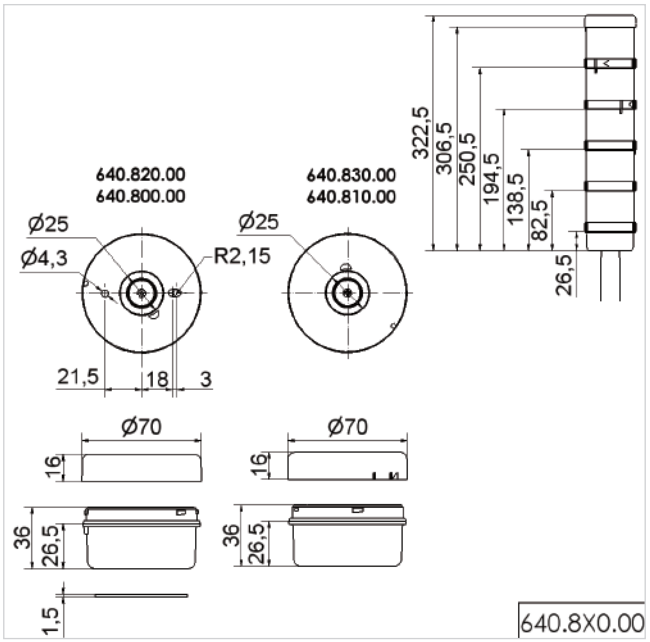

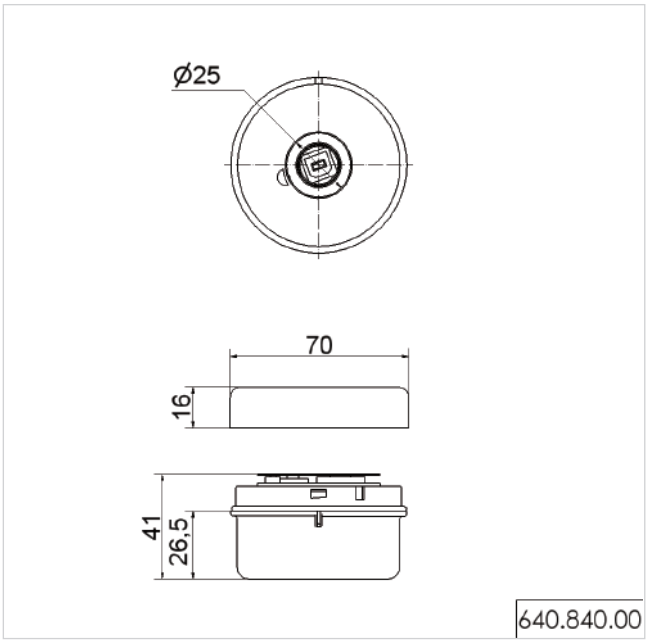

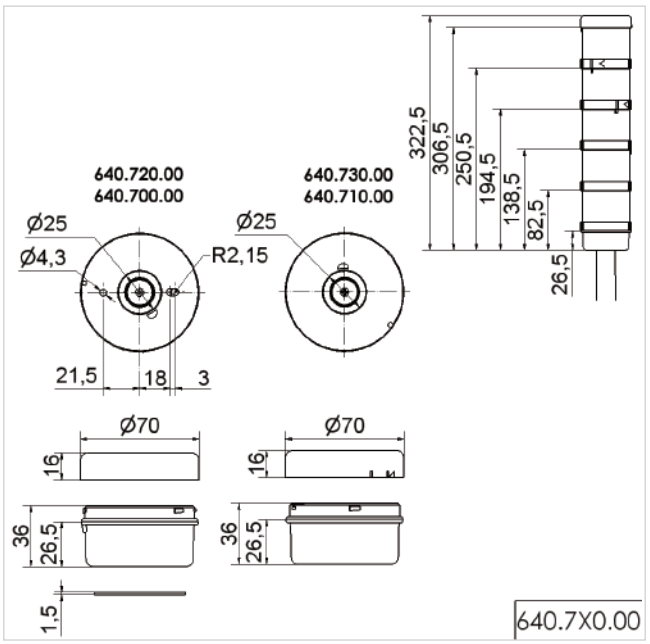

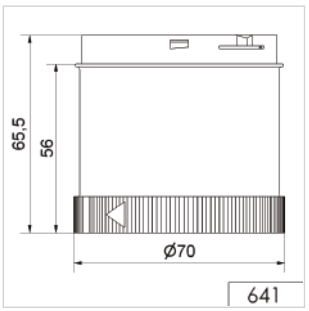

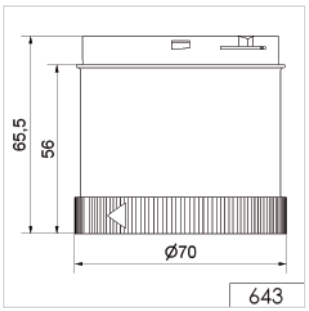

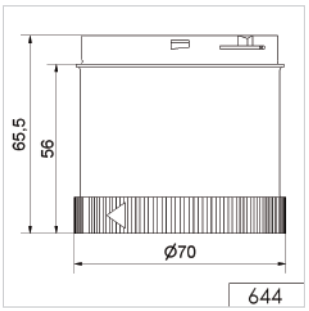

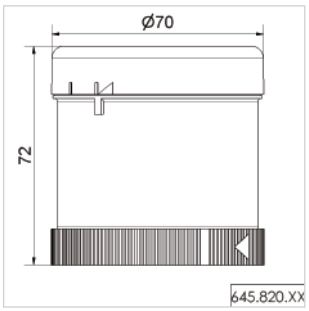

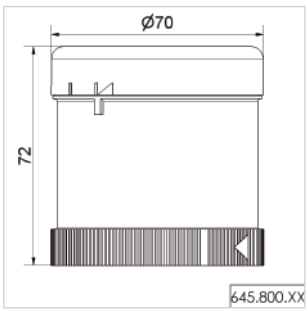

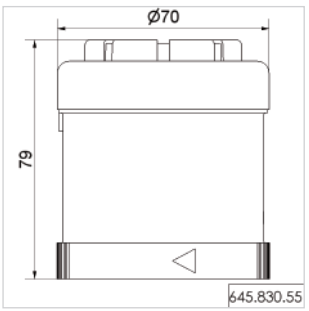

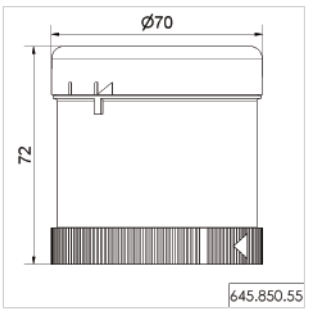

ADDITIONAL INFORMATION:

You are welcome to request the technical diagrams in digital form. The relevant 3D models, instruction leaflets and connection diagrams can be obtained from us or downloaded from our homepage at any time.

Technical Diagrams

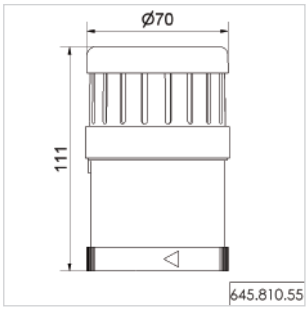

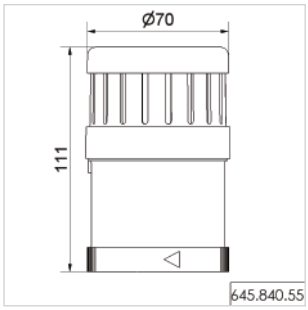

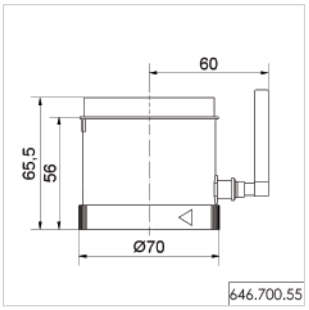

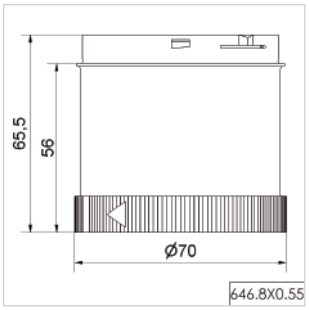

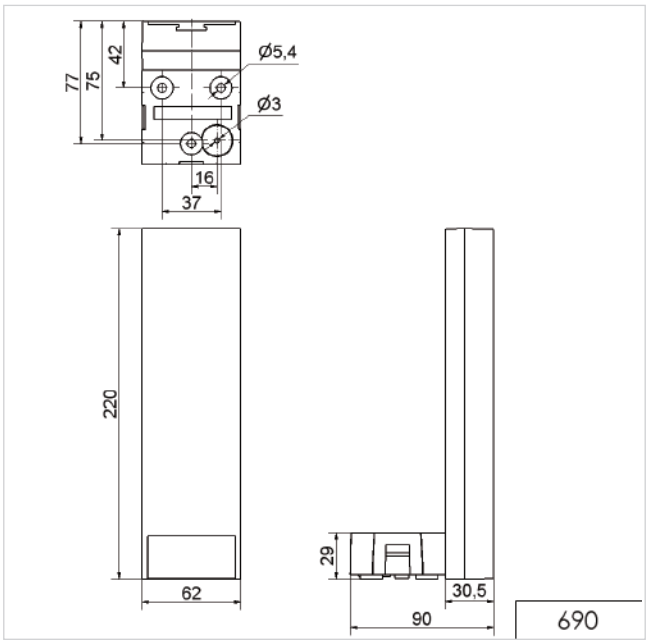

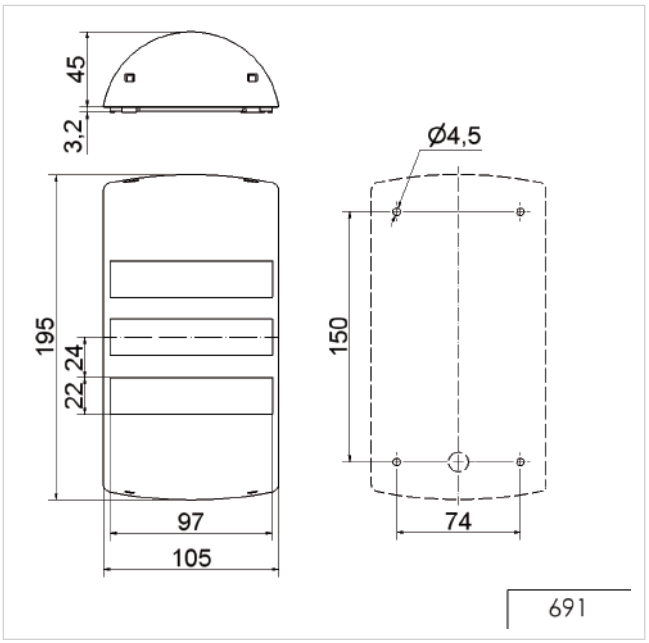

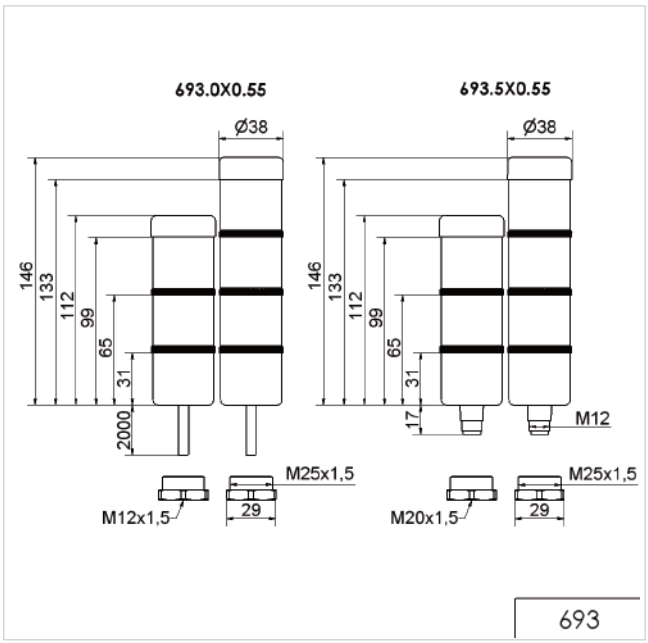

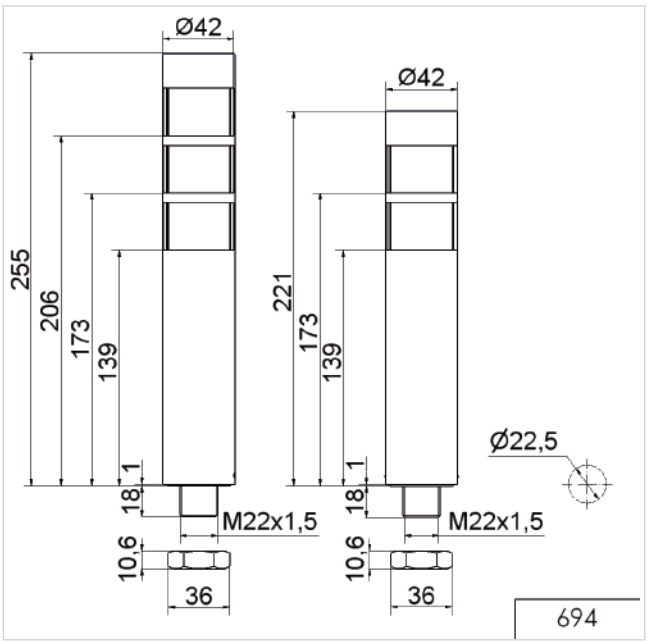

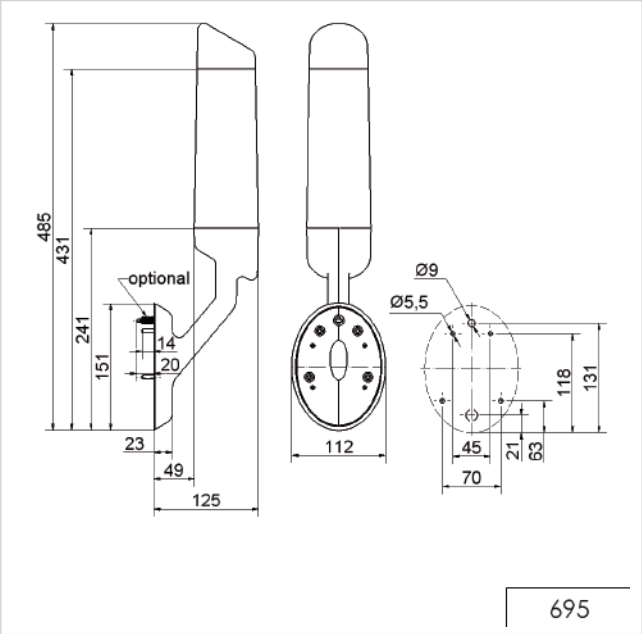

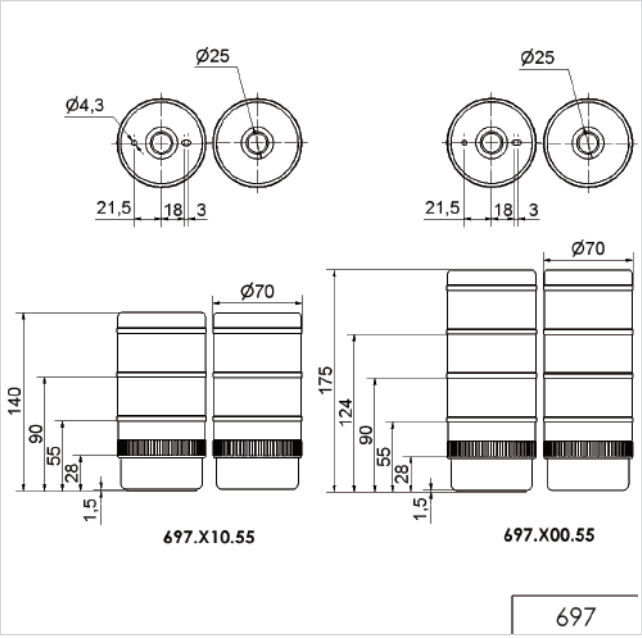

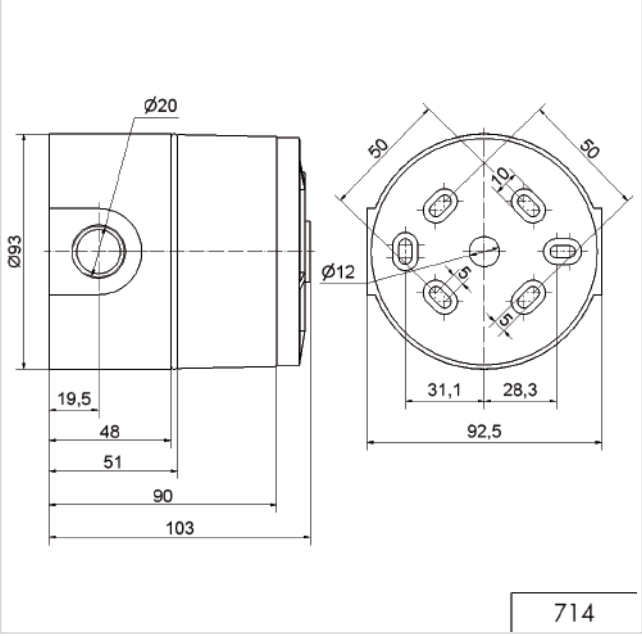

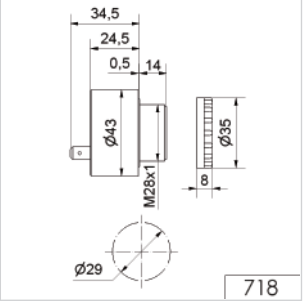

ADDITIONAL INFORMATION:

You are welcome to request the technical diagrams in digital form. The relevant 3D models, instruction leaflets and connection diagrams can be obtained from us or downloaded from our homepage at any time.

Technical Diagrams

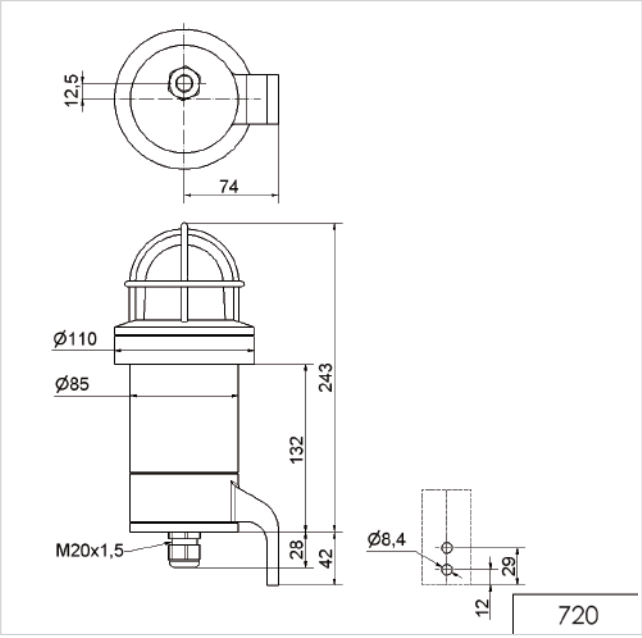

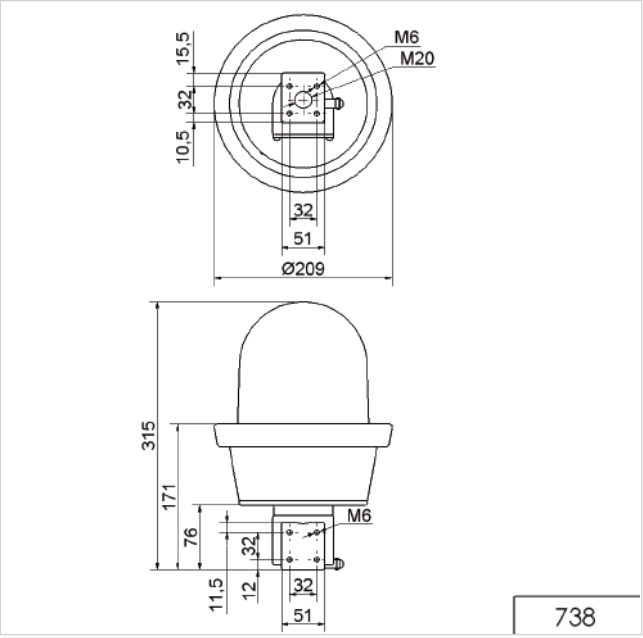

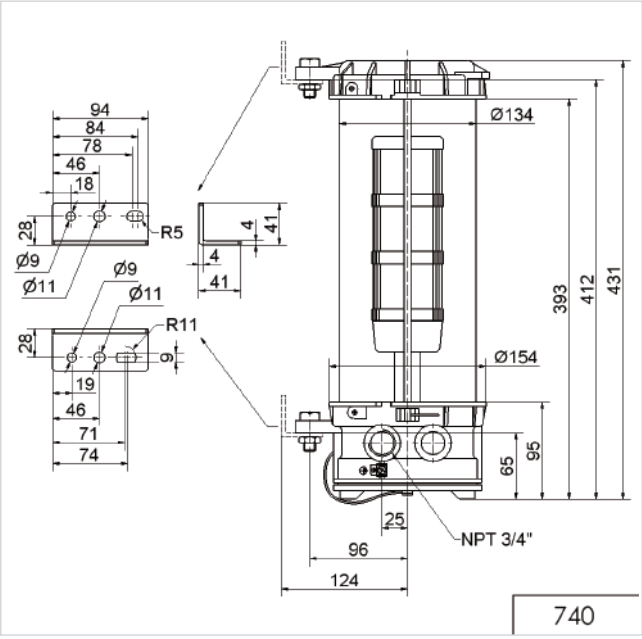

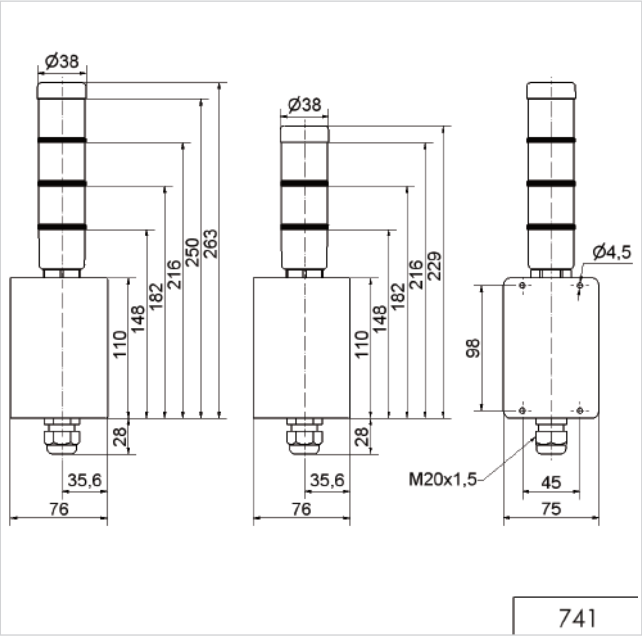

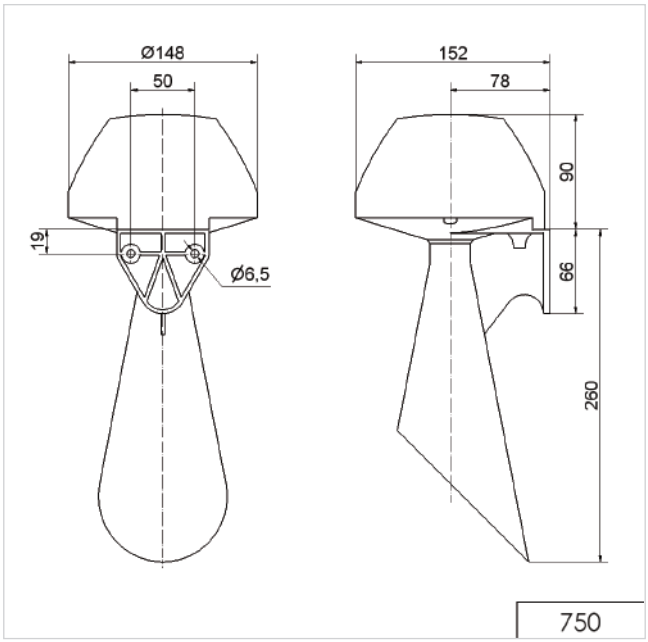

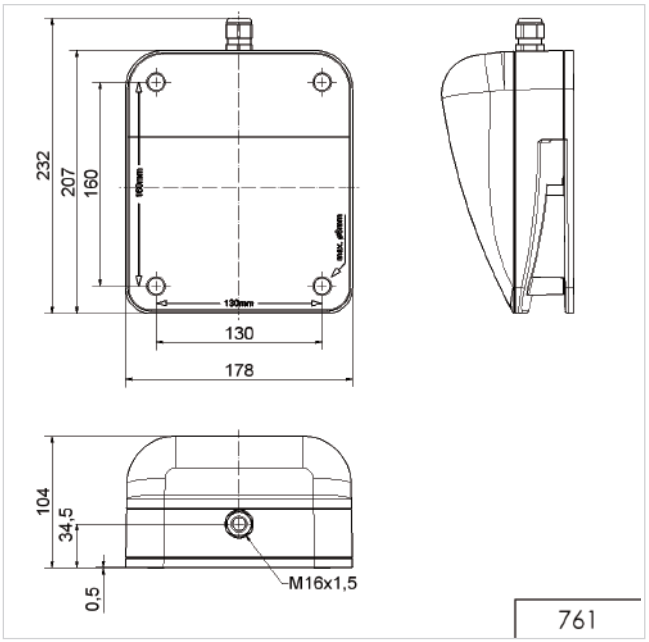

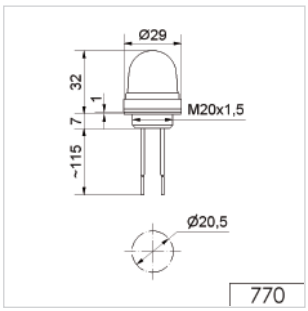

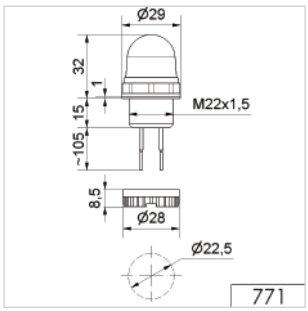

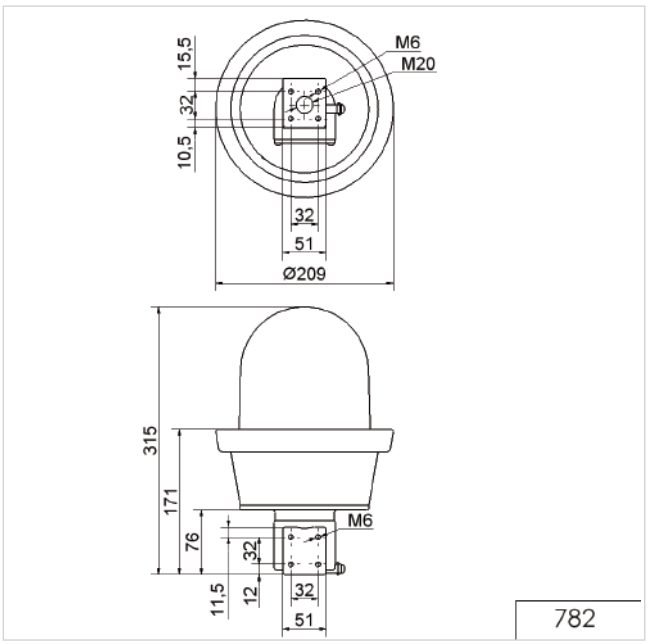

ADDITIONAL INFORMATION:

You are welcome to request the technical diagrams in digital form. The relevant 3D models, instruction leaflets and connection diagrams can be obtained from us or downloaded from our homepage at any time.

Technical Diagrams

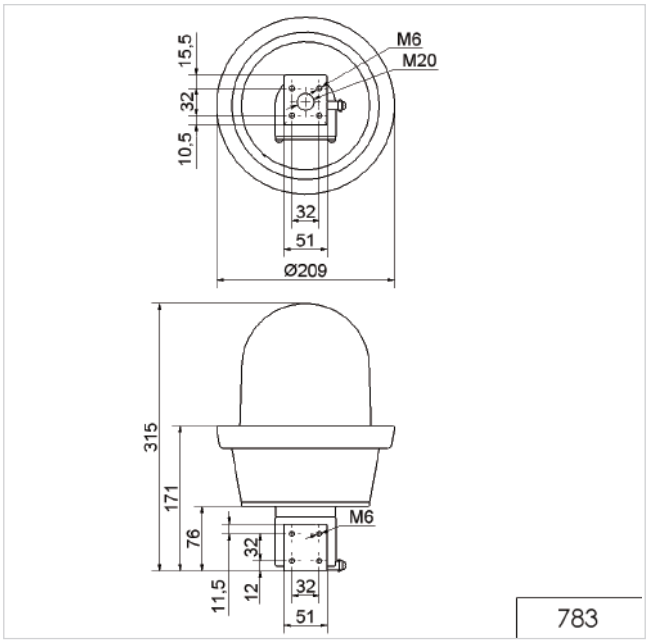

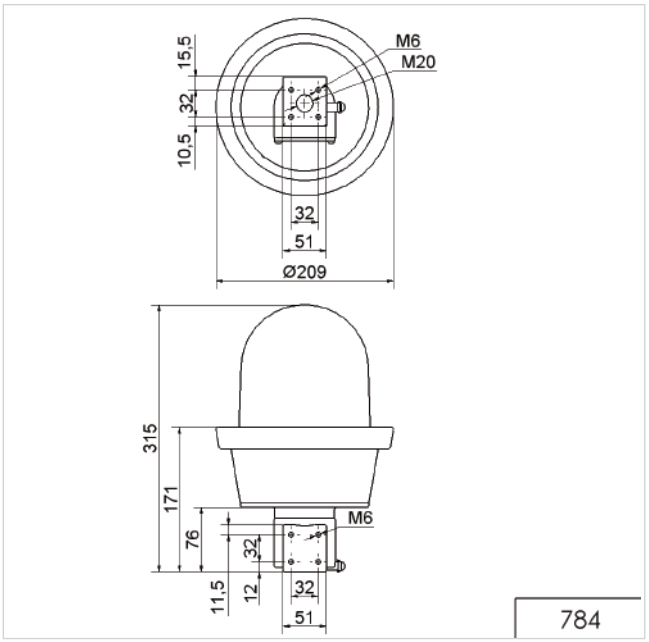

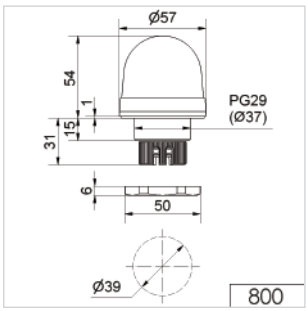

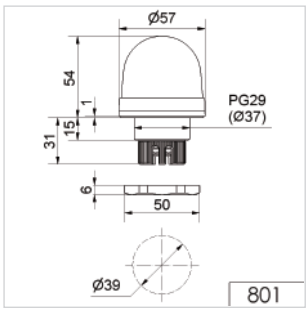

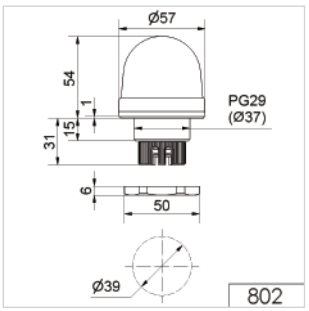

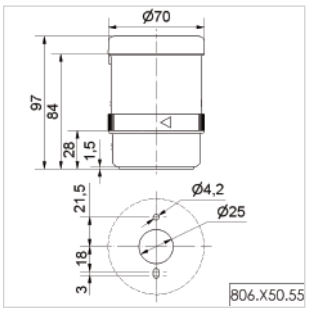

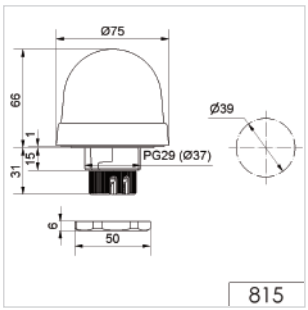

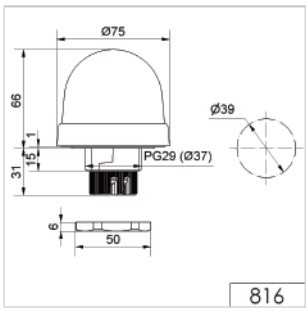

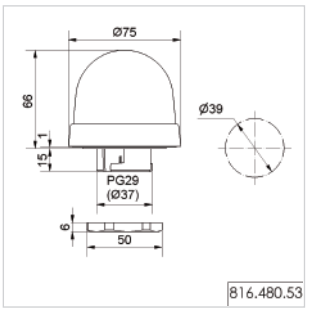

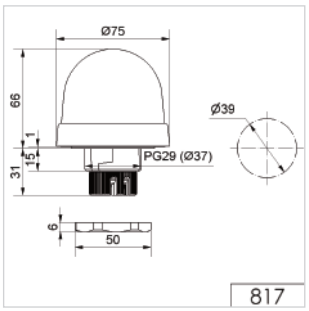

WERMA SIGNALTECHNIK

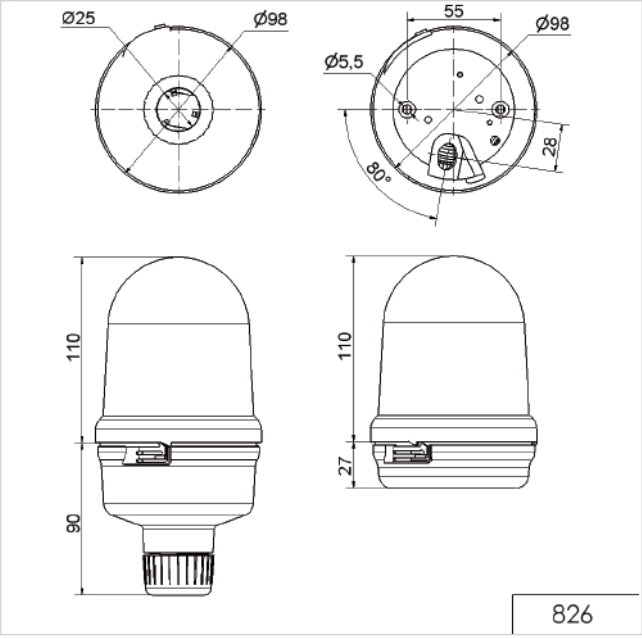

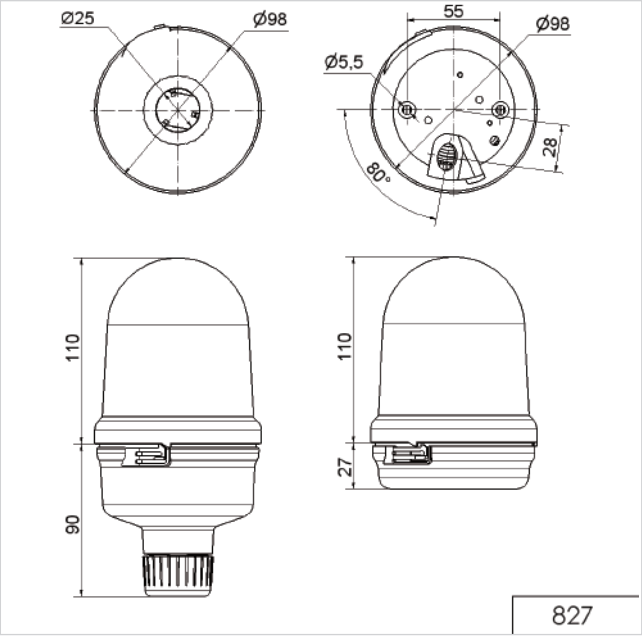

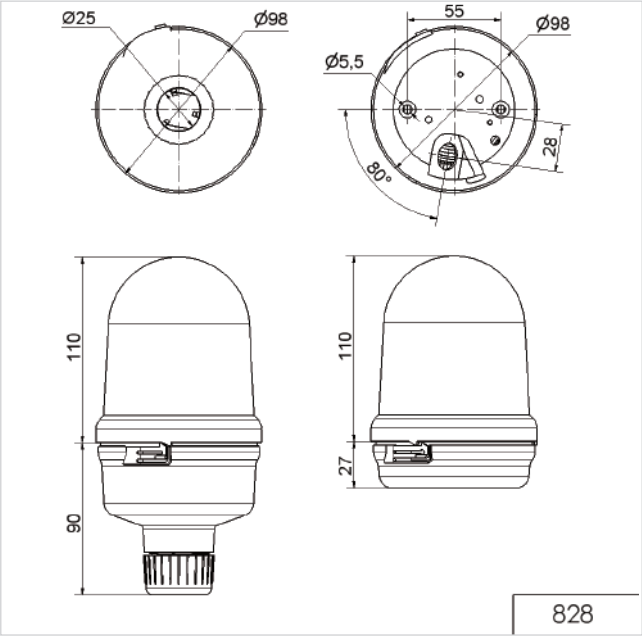

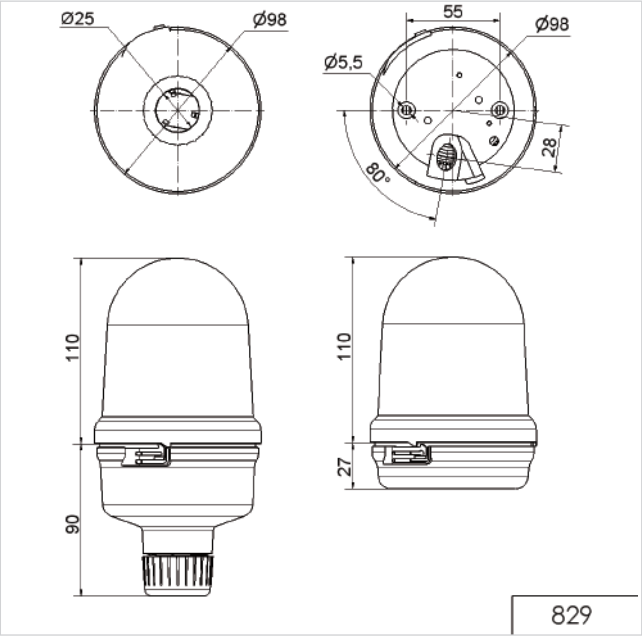

ADDITIONAL INFORMATION:

You are welcome to request the technical diagrams in digital form. The relevant 3D models, instruction leaflets and connection diagrams can be obtained from us or downloaded from our homepage at any time.

Technical Diagrams

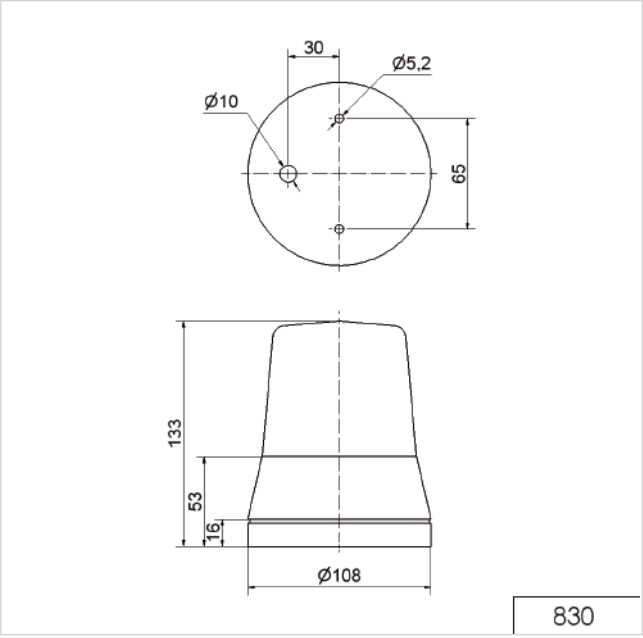

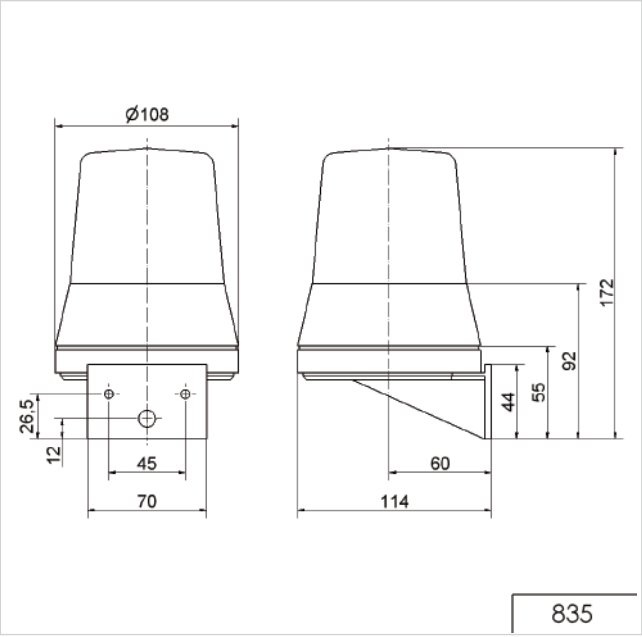

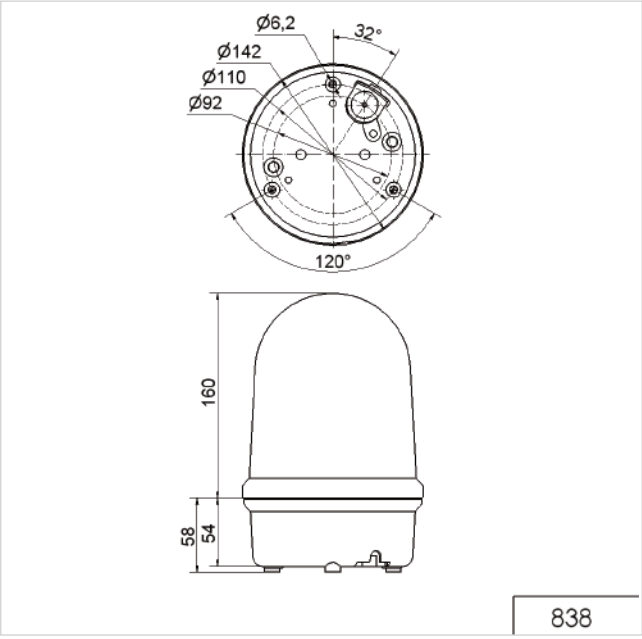

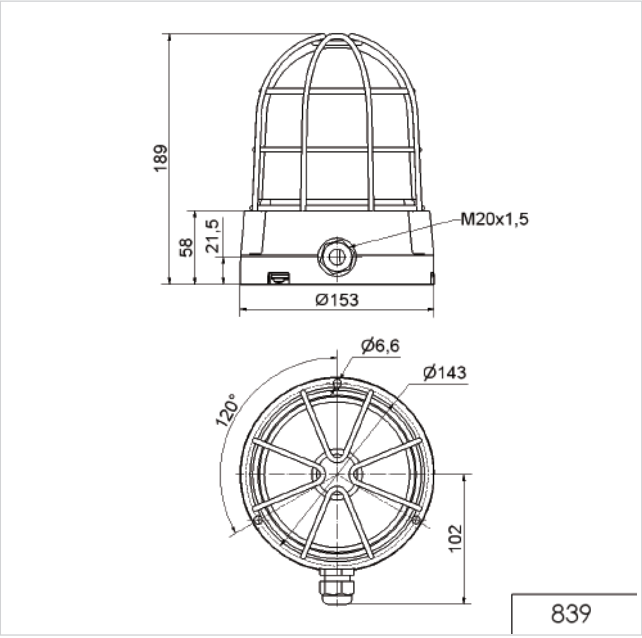

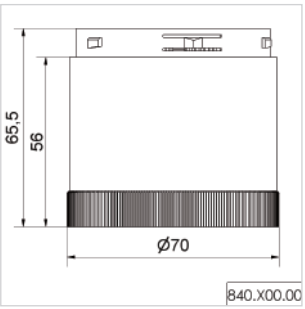

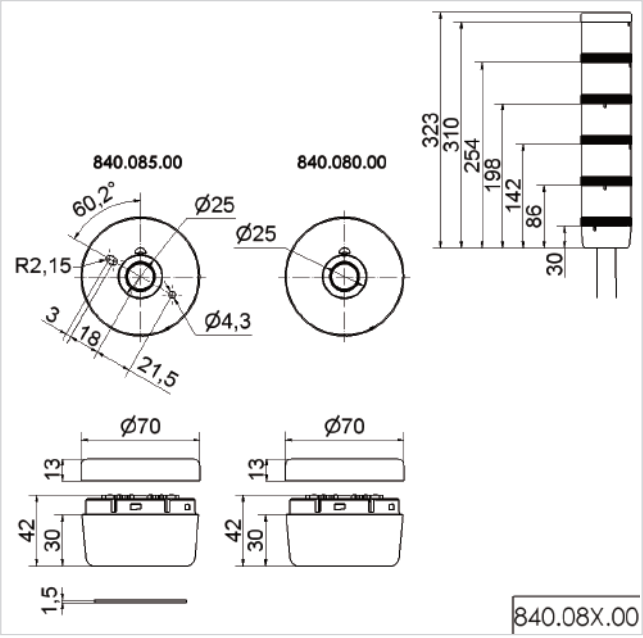

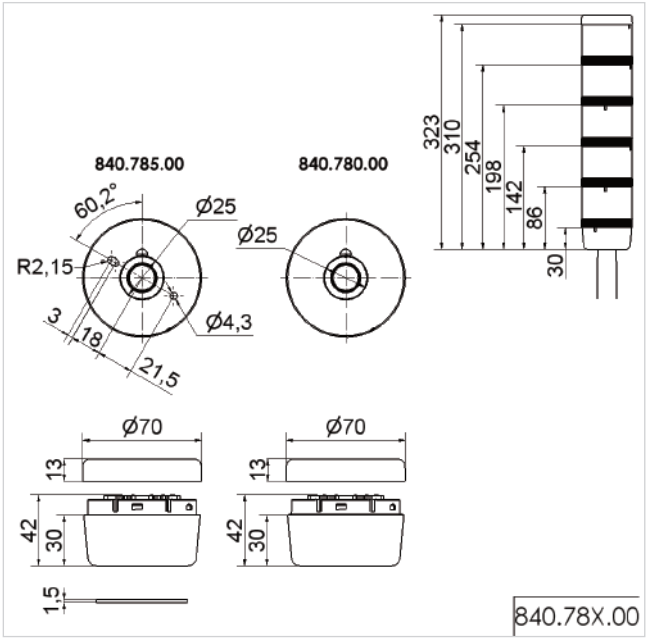

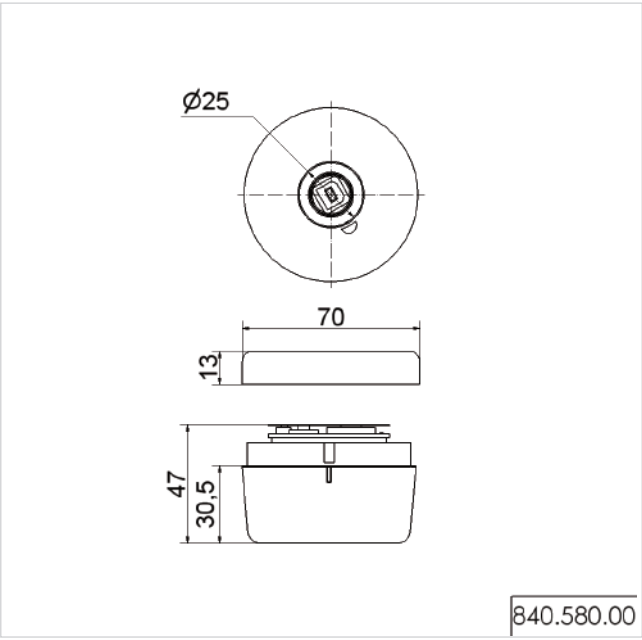

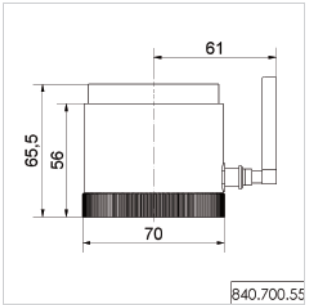

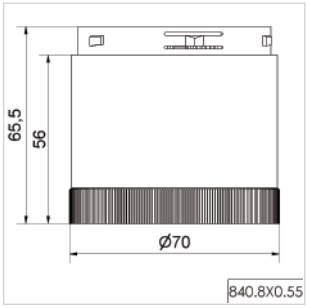

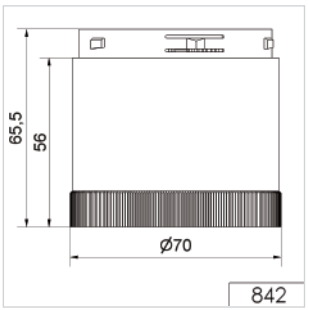

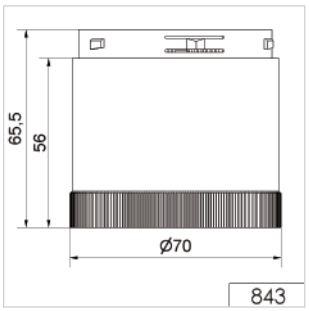

ADDITIONAL INFORMATION:

You are welcome to request the technical diagrams in digital form. The relevant 3D models, instruction leaflets and connection diagrams can be obtained from us or downloaded from our homepage at any time.

Technical Diagrams

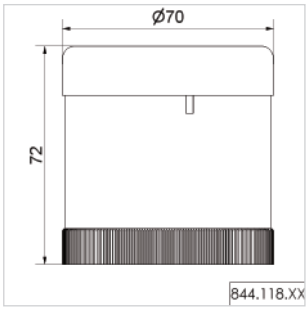

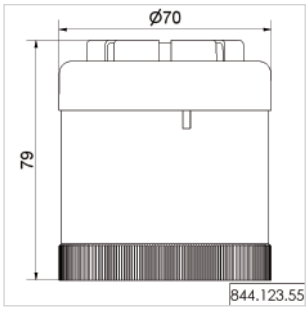

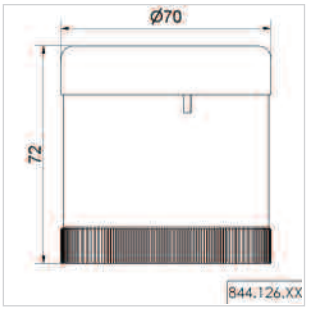

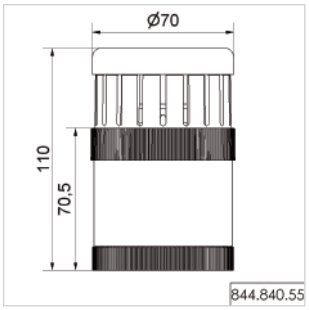

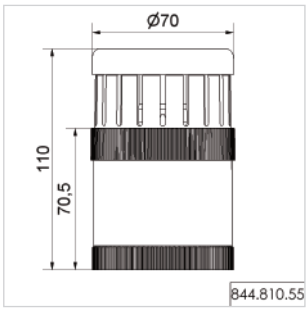

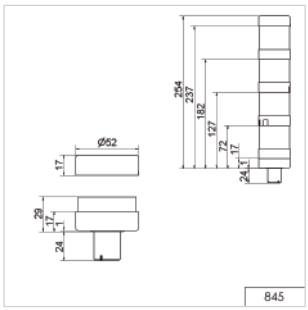

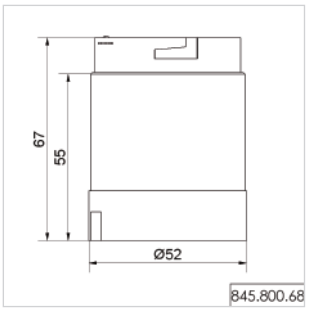

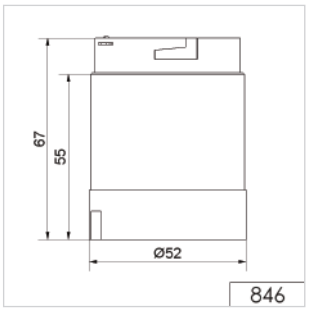

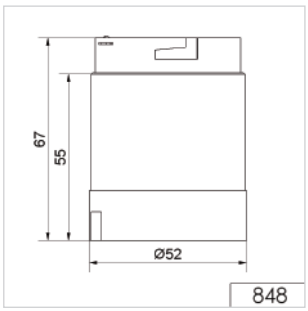

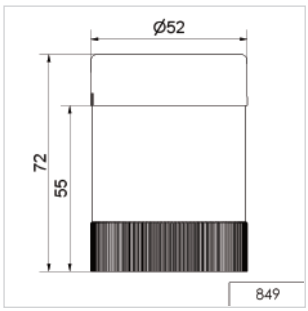

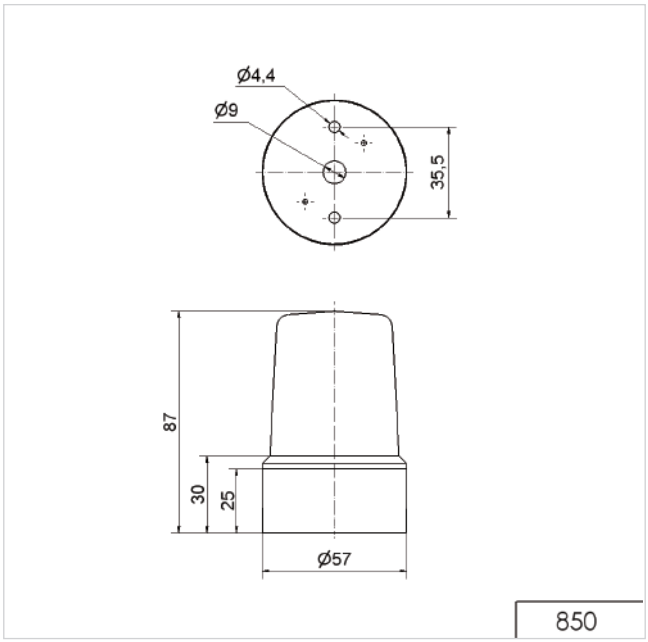

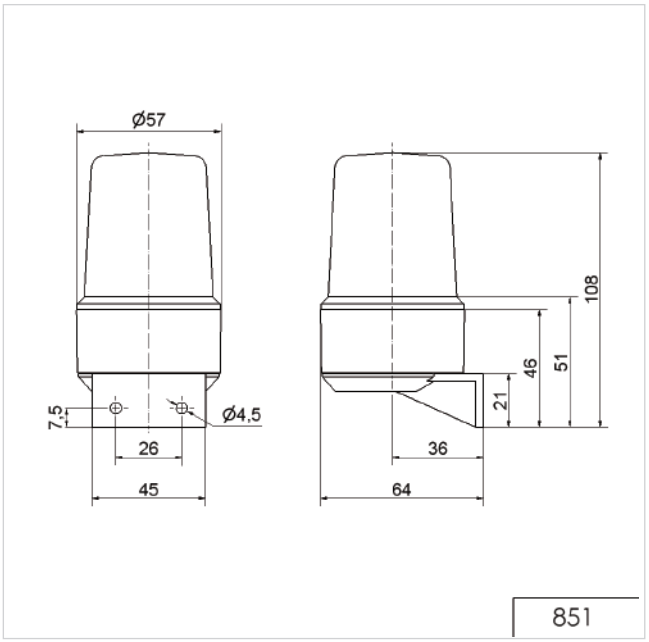

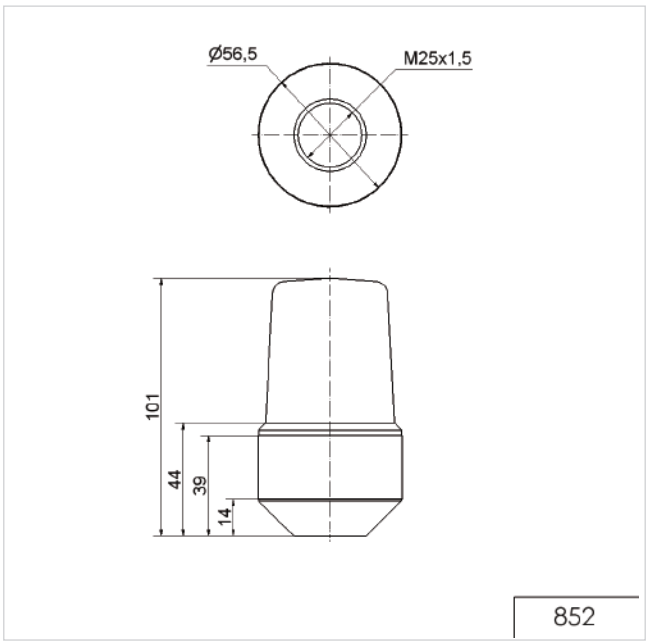

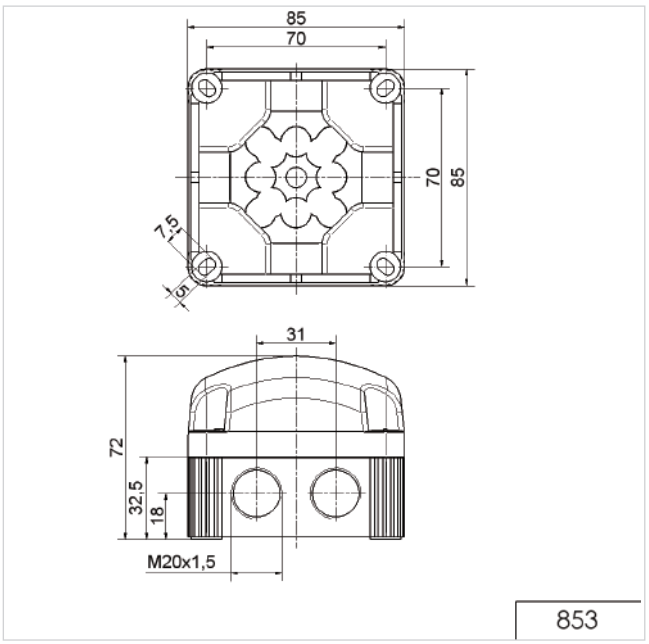

ADDITIONAL INFORMATION:

You are welcome to request the technical diagrams in digital form. The relevant 3D models, instruction leaflets and connection diagrams can be obtained from us or downloaded from our homepage at any time.

Technical Diagrams

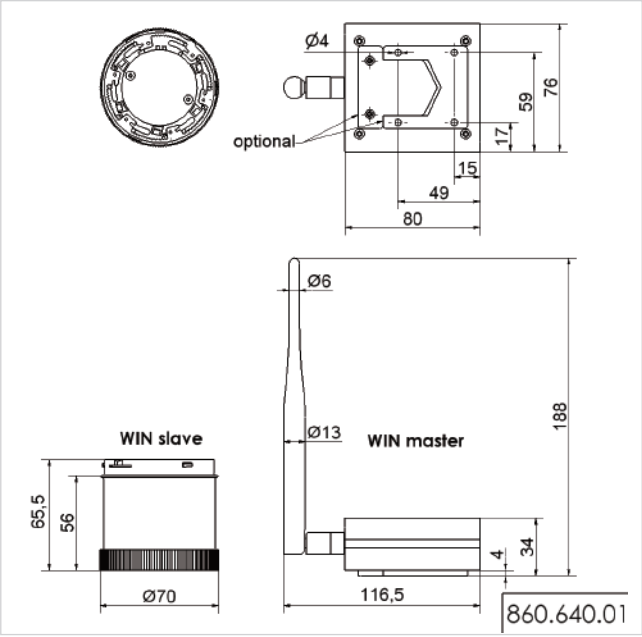

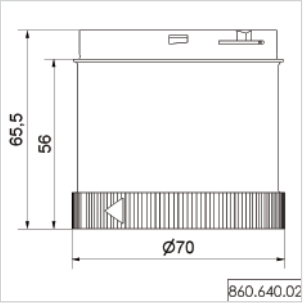

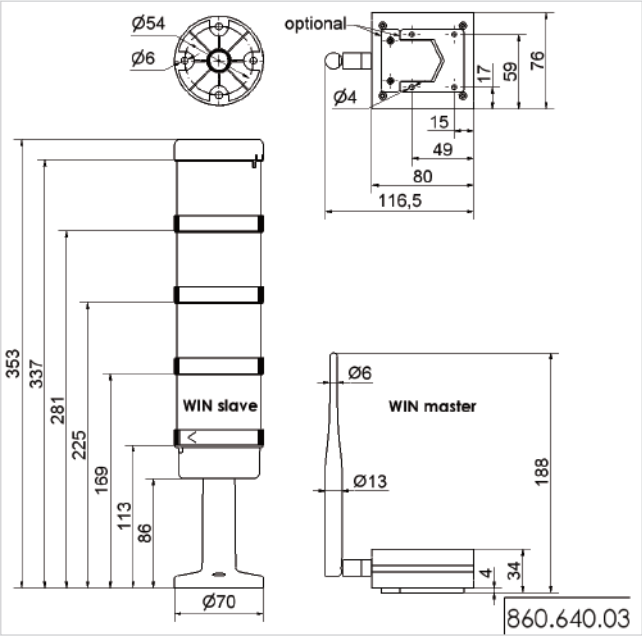

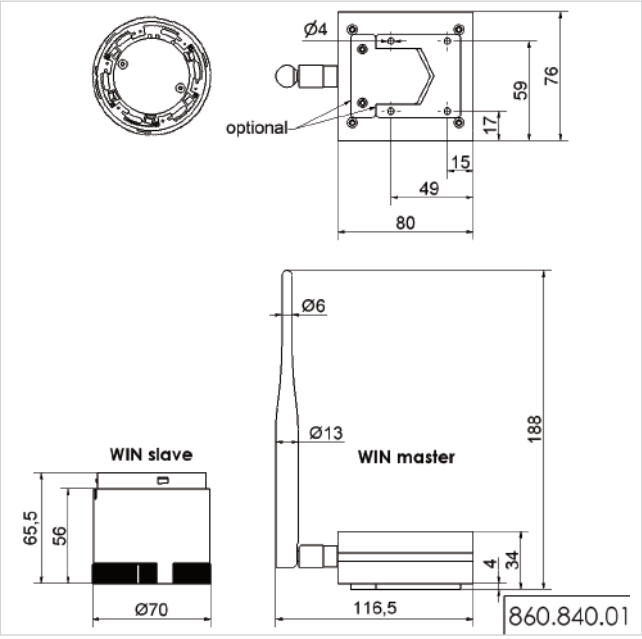

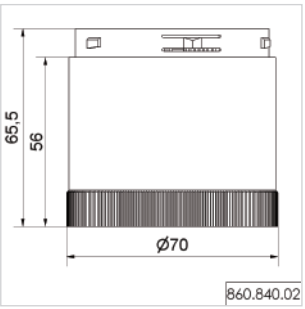

WERMA SIGNALTECHNIK

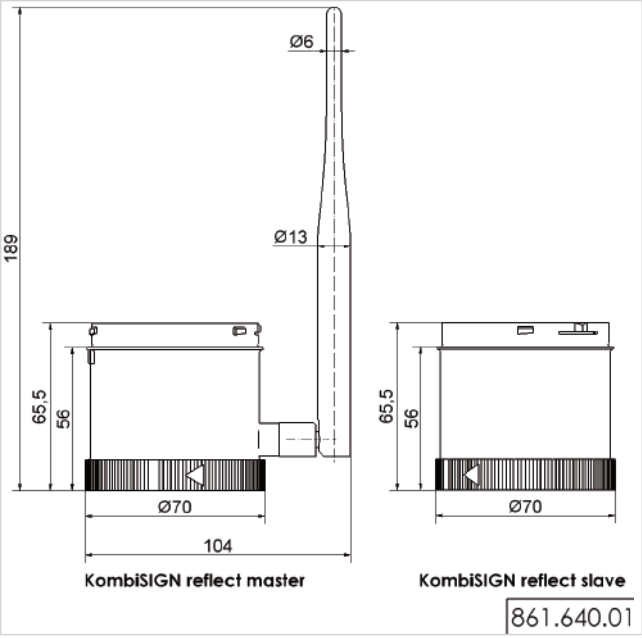

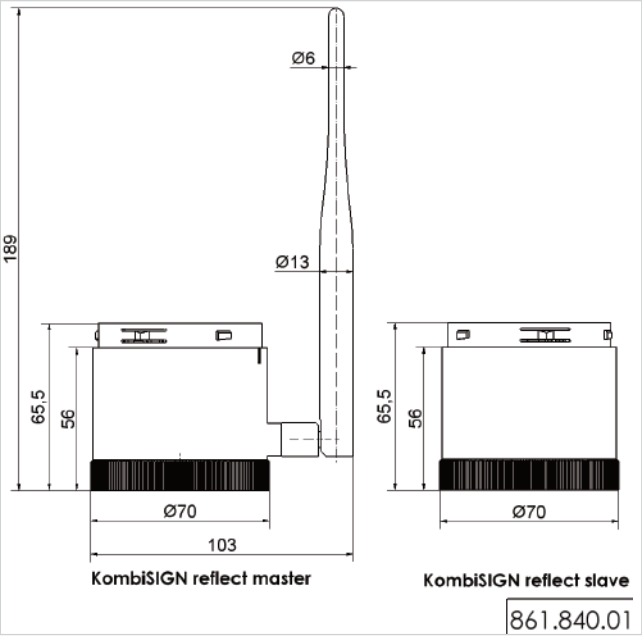

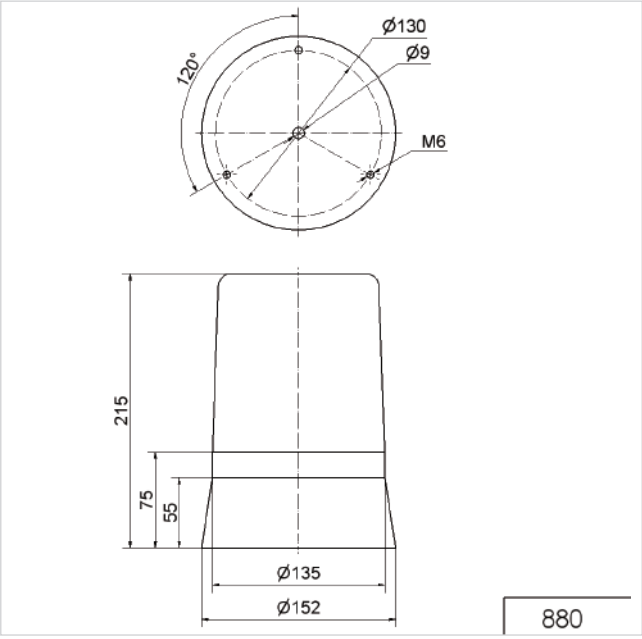

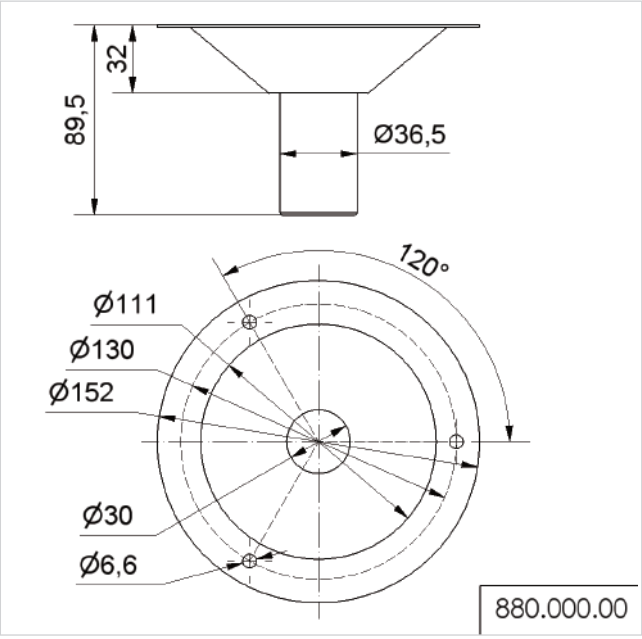

Technical Diagrams

ADDITIONAL INFORMATION:

You are welcome to request the technical diagrams in digital form. The relevant 3D models, instruction leaflets and connection diagrams can be obtained from us or downloaded from our homepage at any time.

Technical Diagrams

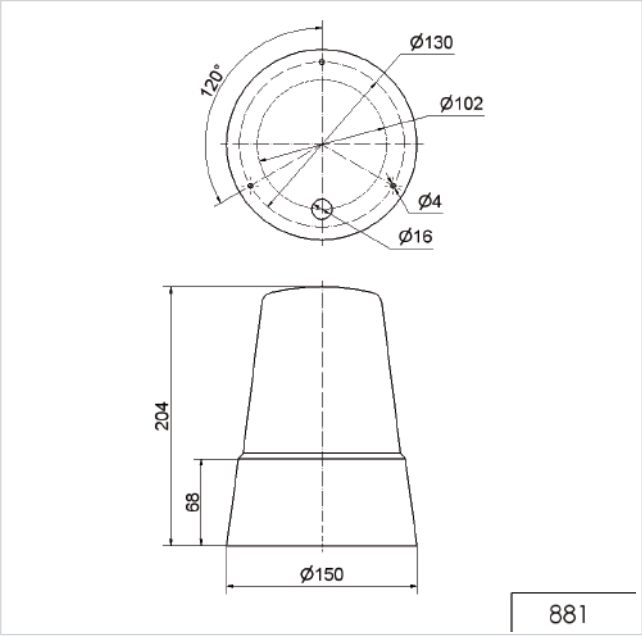

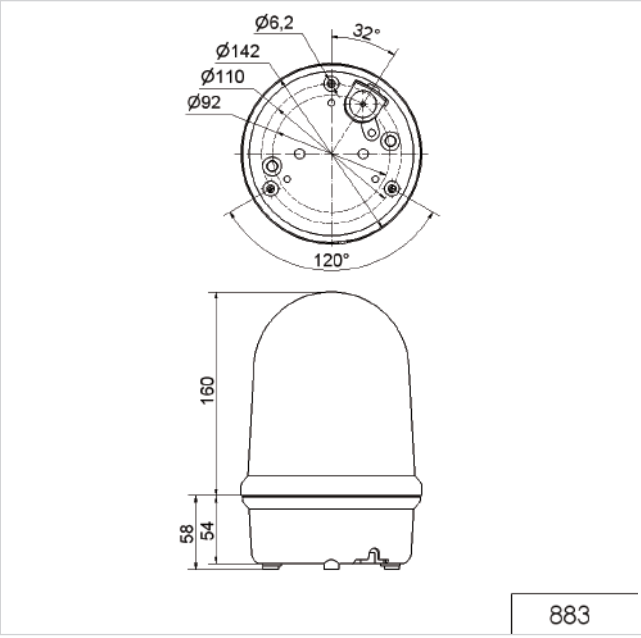

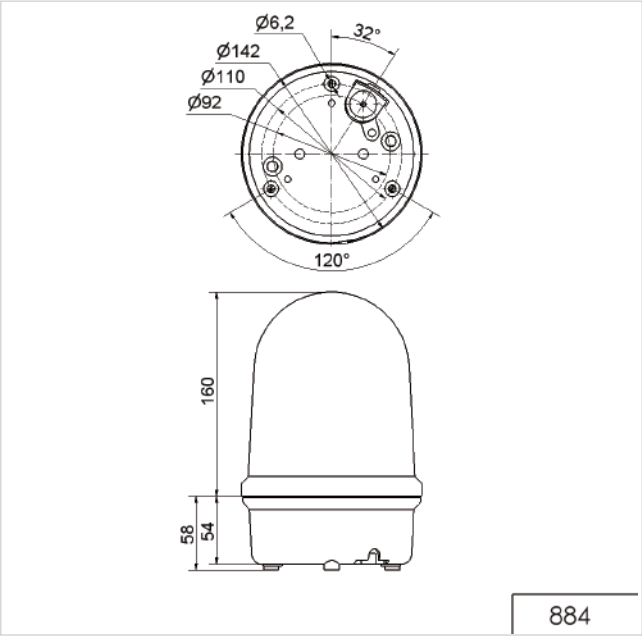

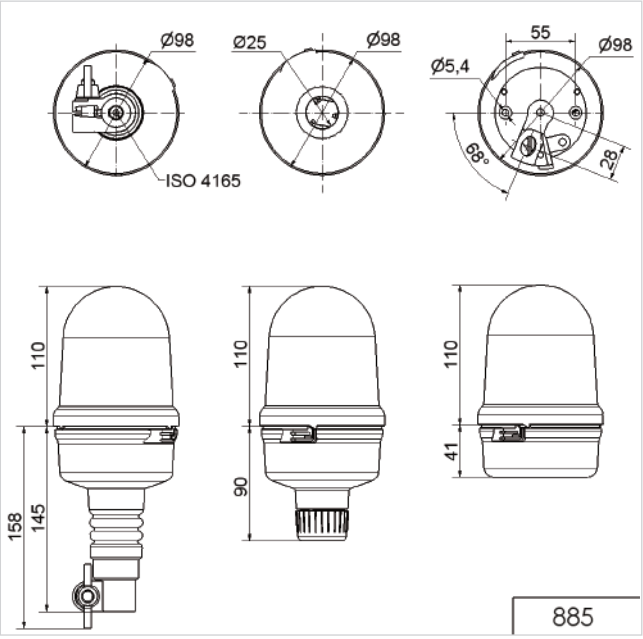

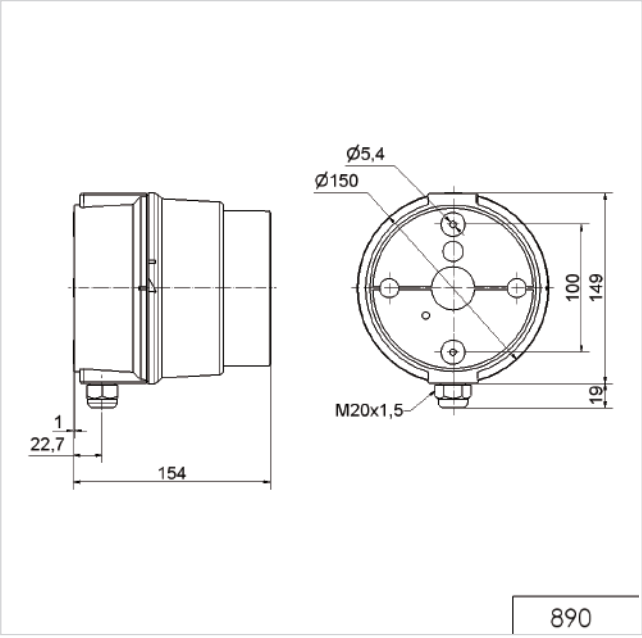

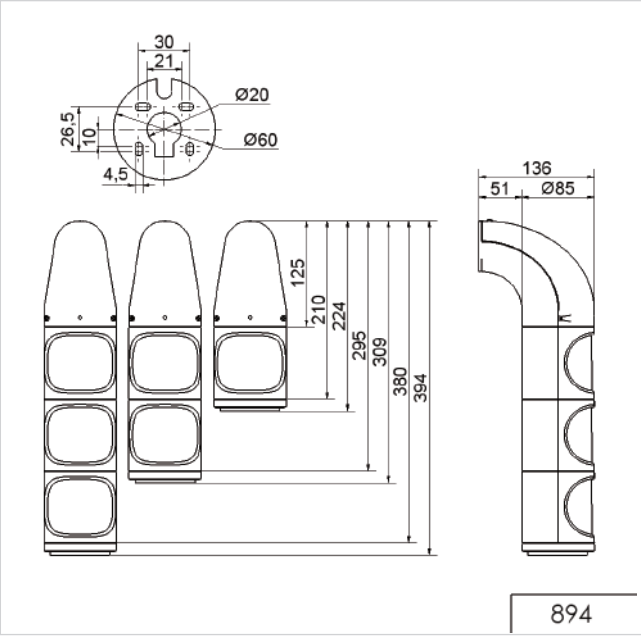

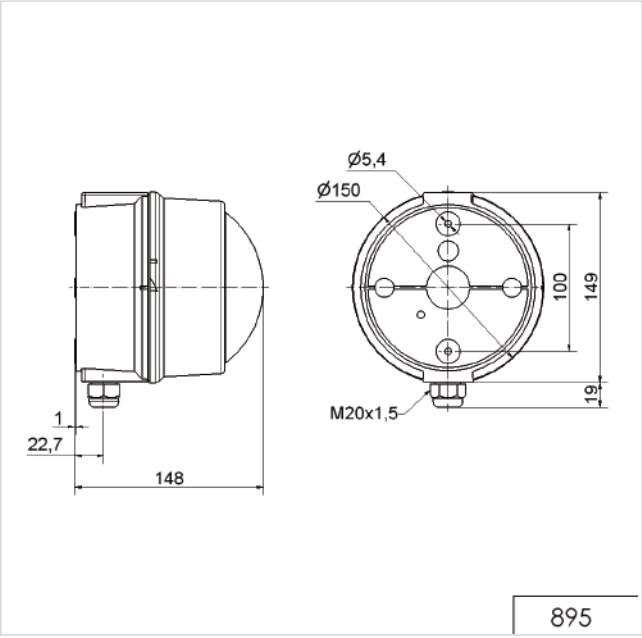

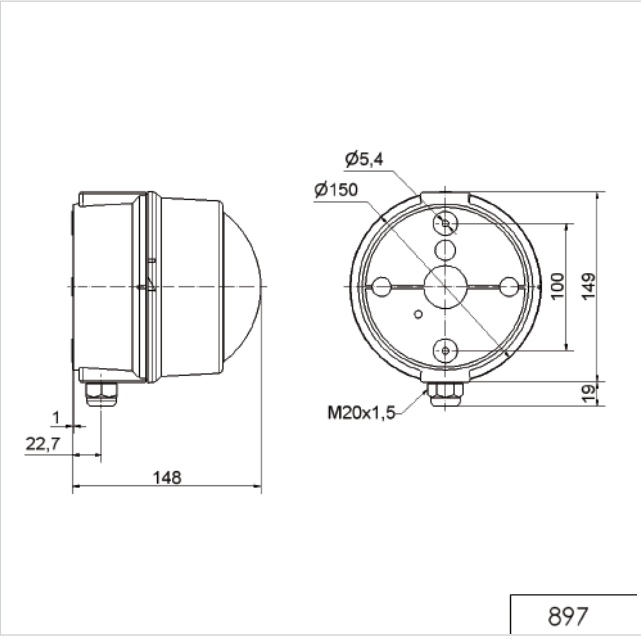

ADDITIONAL INFORMATION:

You are welcome to request the technical diagrams in digital form. The relevant 3D models, instruction leaflets and connection diagrams can be obtained from us or downloaded from our homepage at any time.

Technical Diagrams

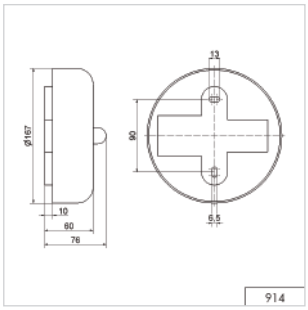

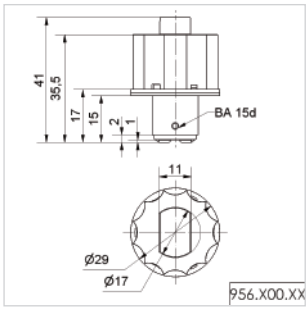

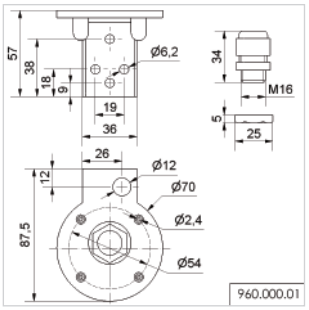

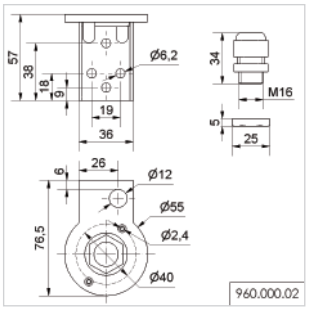

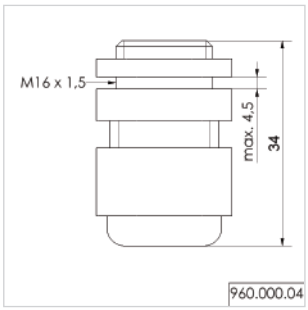

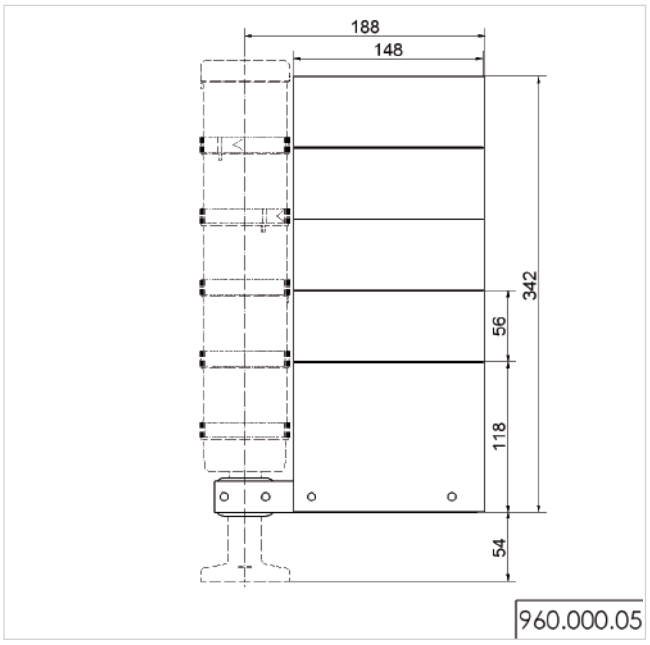

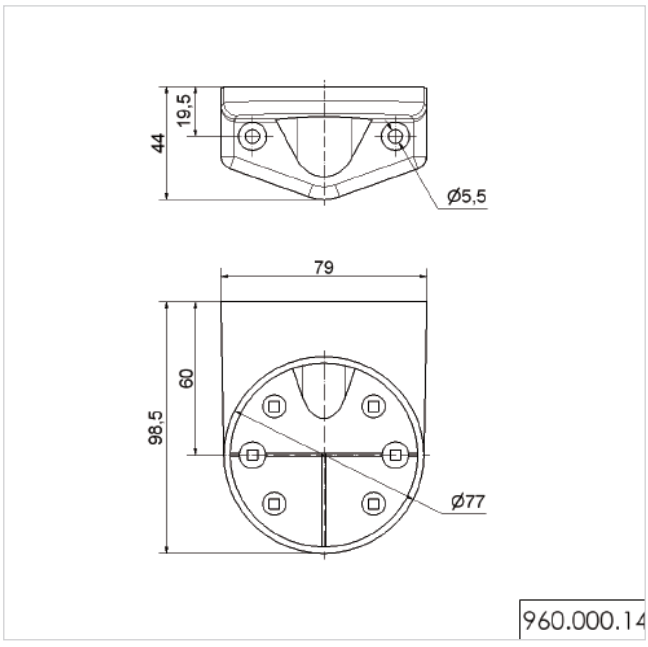

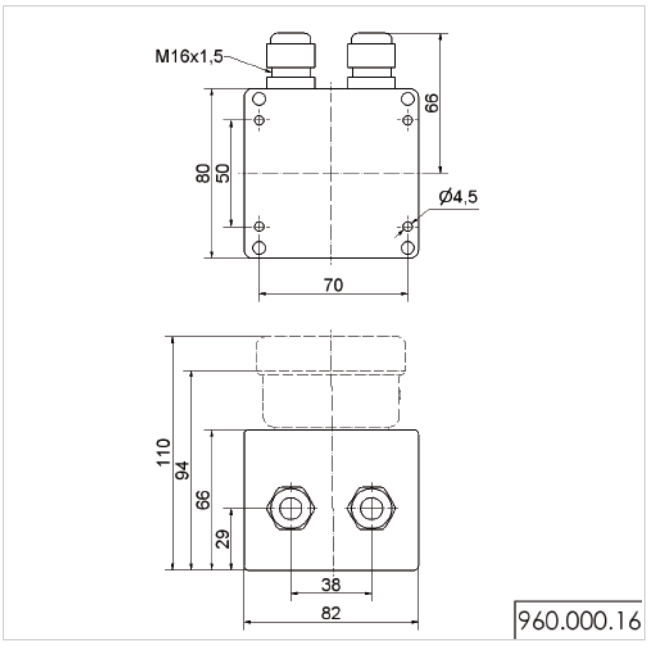

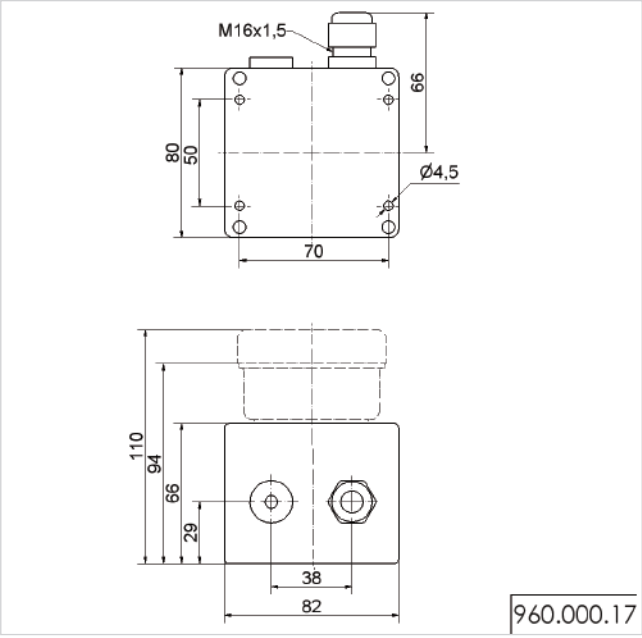

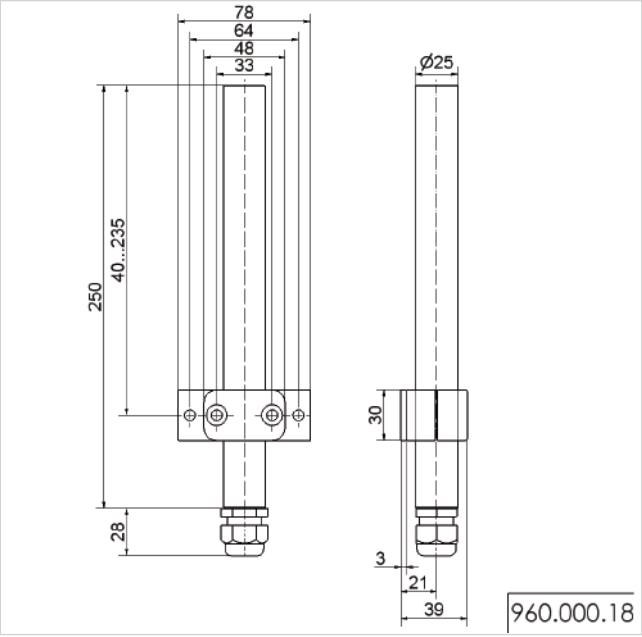

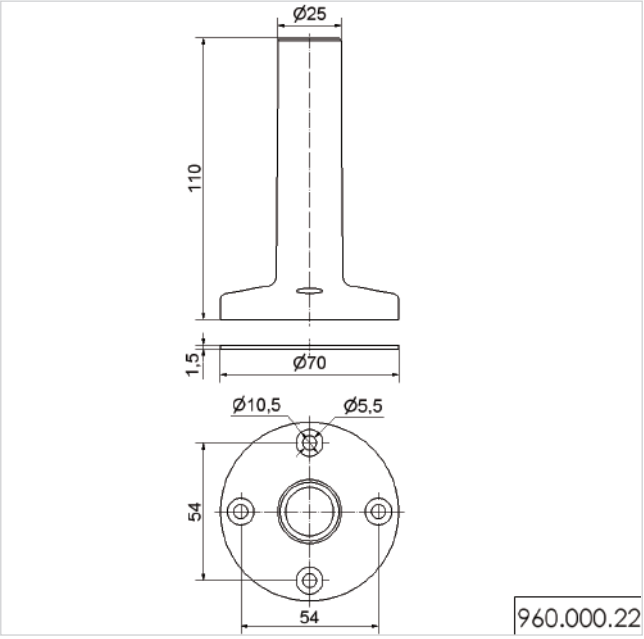

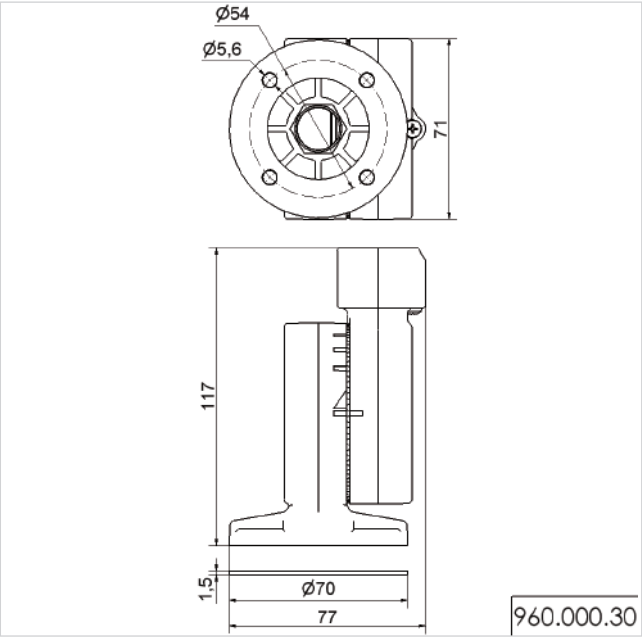

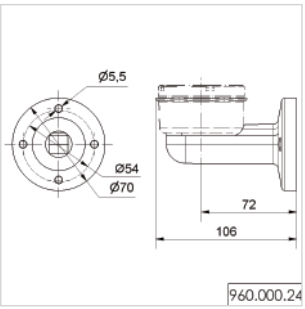

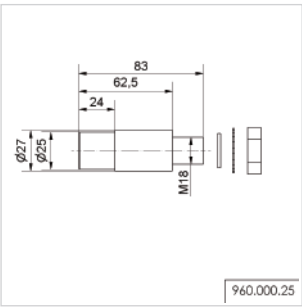

ADDITIONAL INFORMATION:

You are welcome to request the technical diagrams in digital form. The relevant 3D models, instruction leaflets and connection diagrams can be obtained from us or downloaded from our homepage at any time.

Technical Diagrams

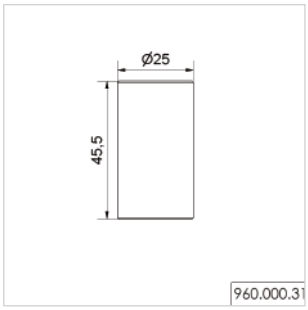

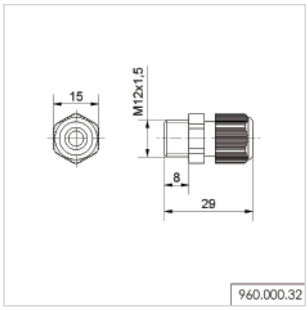

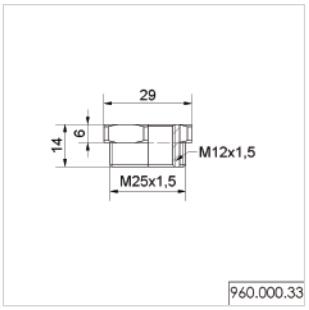

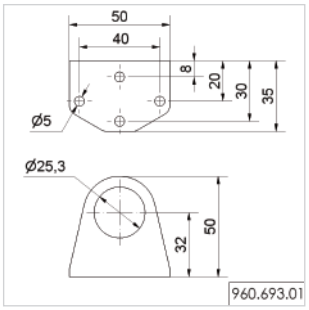

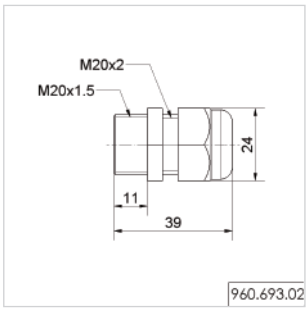

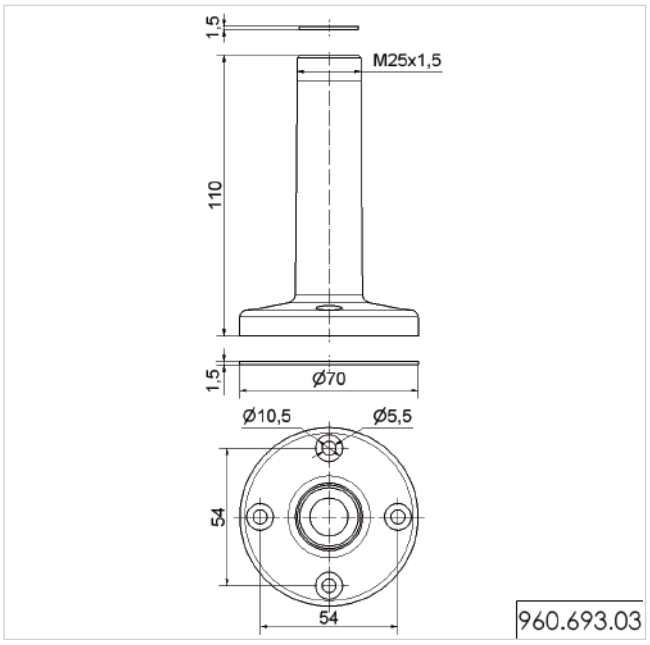

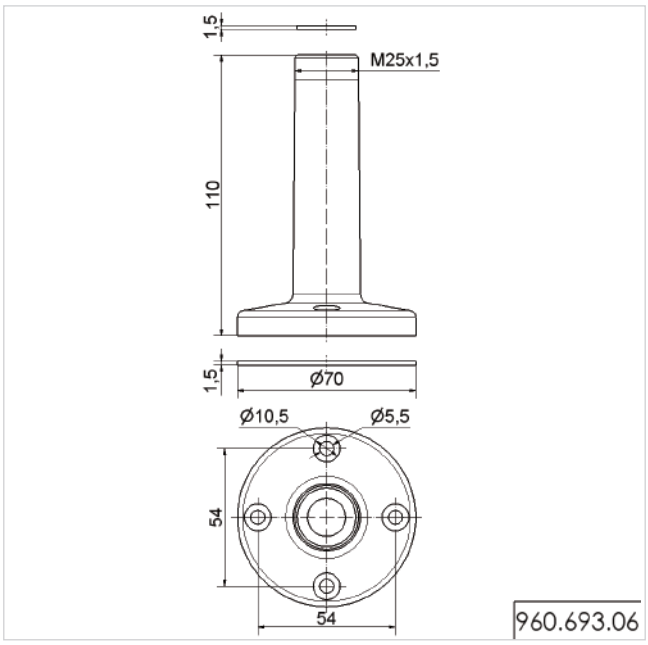

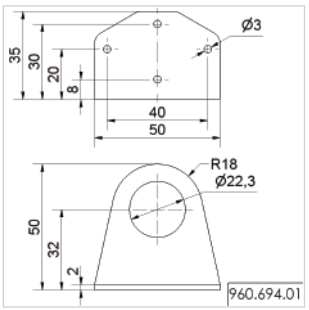

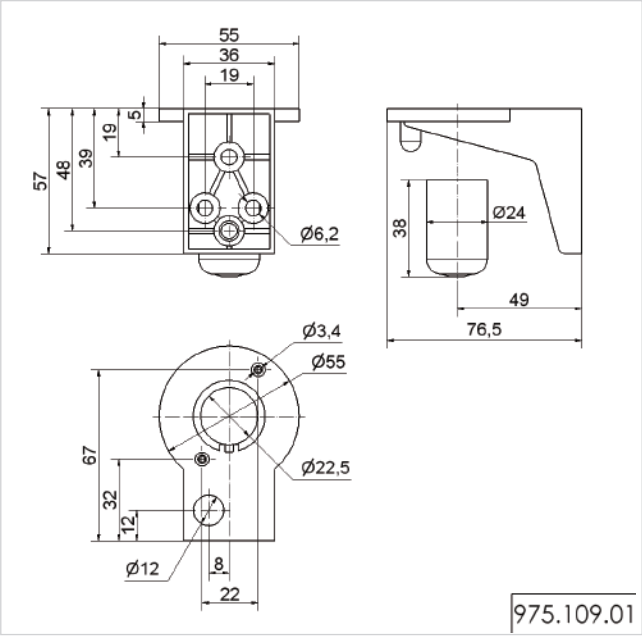

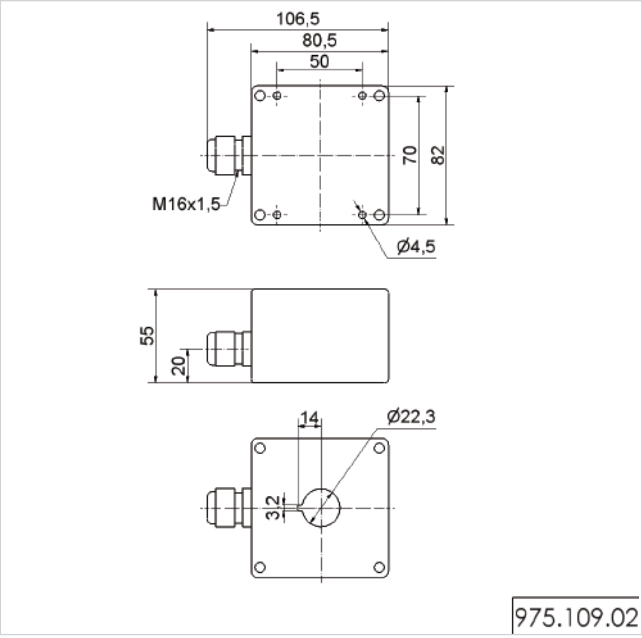

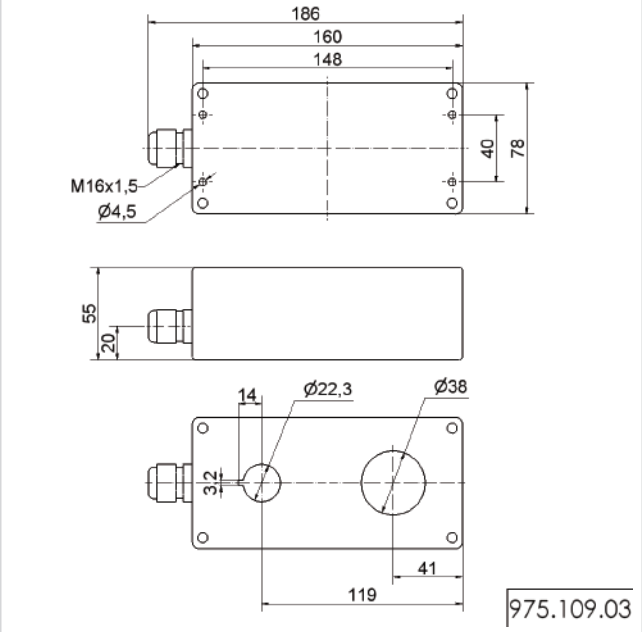

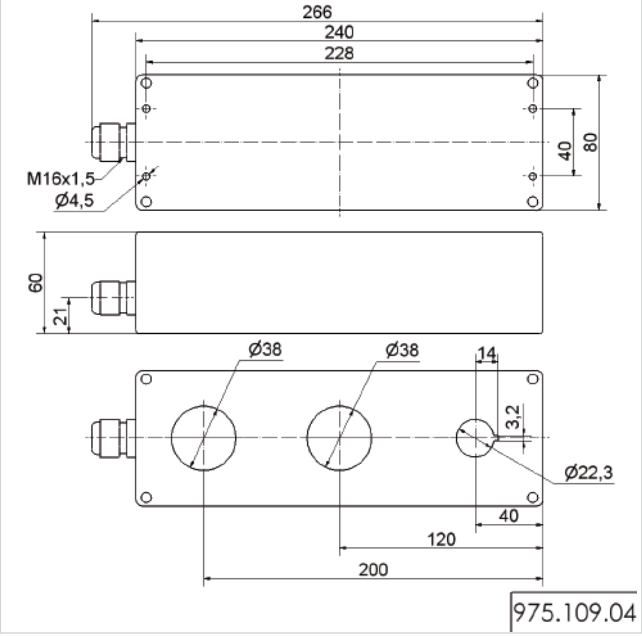

ADDITIONAL INFORMATION:

You are welcome to request the technical diagrams in digital form. The relevant 3D models, instruction leaflets and connection diagrams can be obtained from us or downloaded from our homepage at any time.

Technical Diagrams

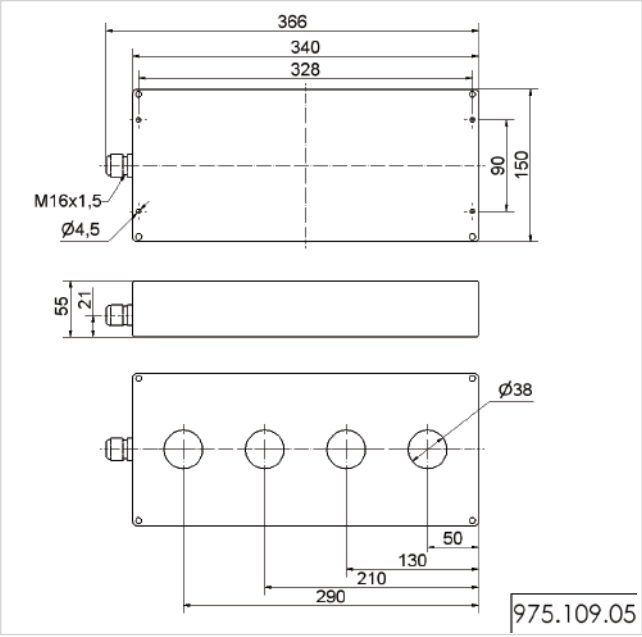

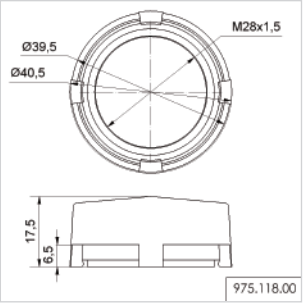

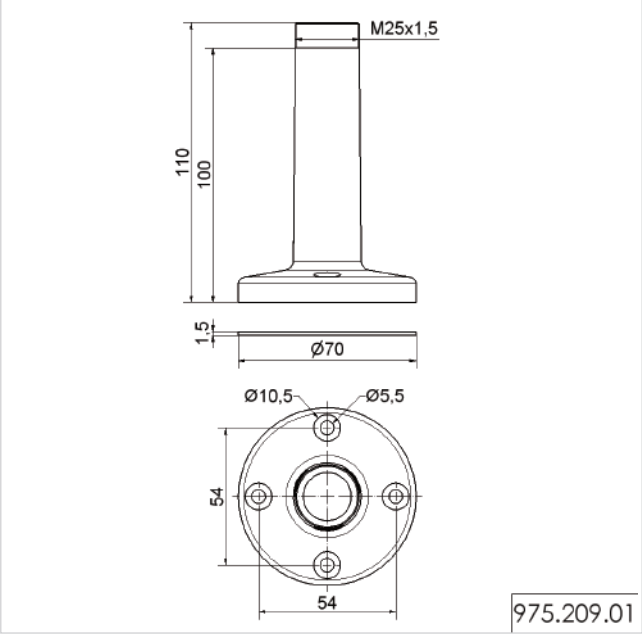

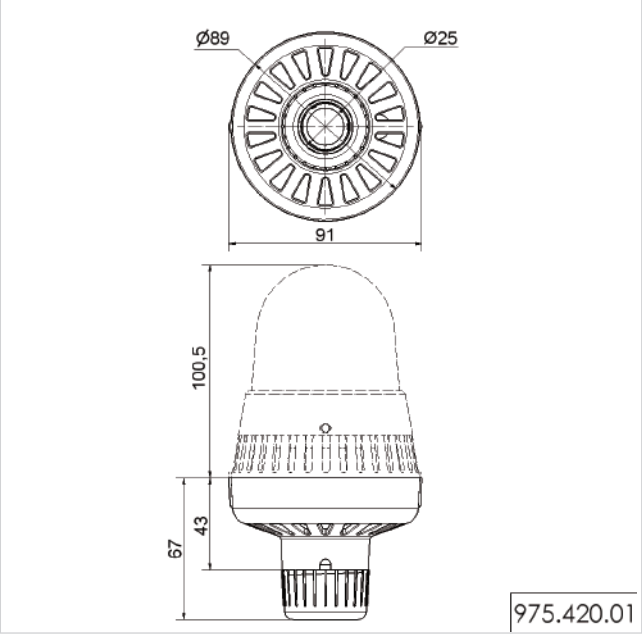

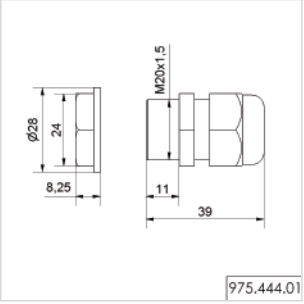

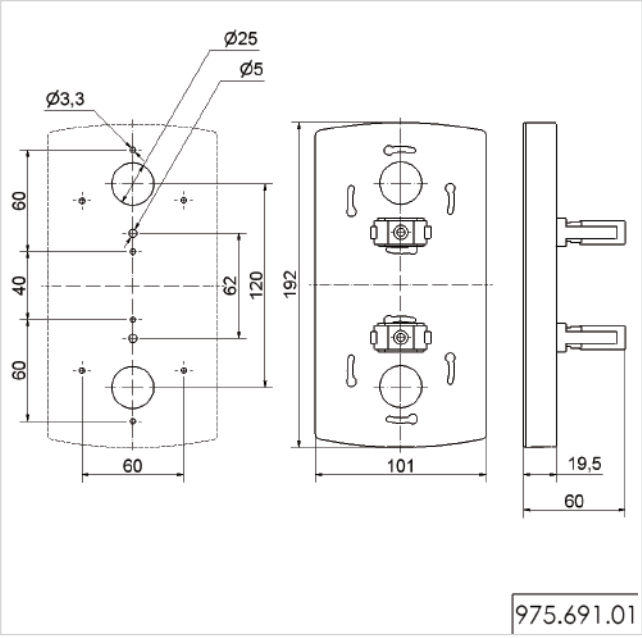

975.691.01

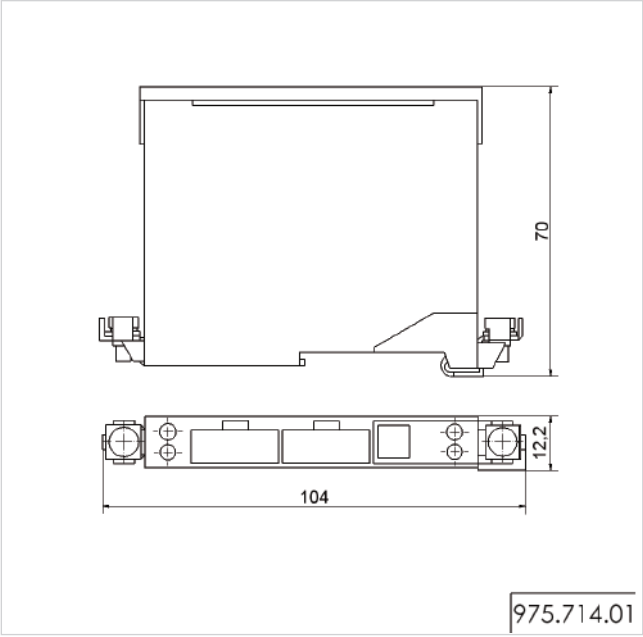

975.714.01

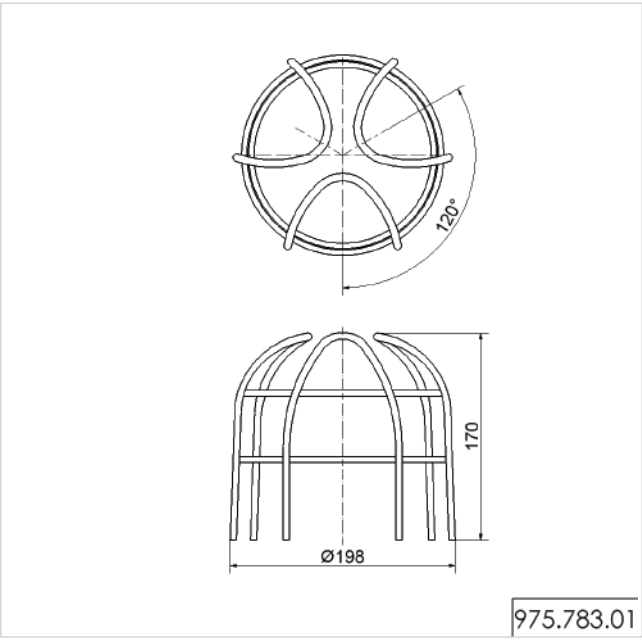

975.783.01

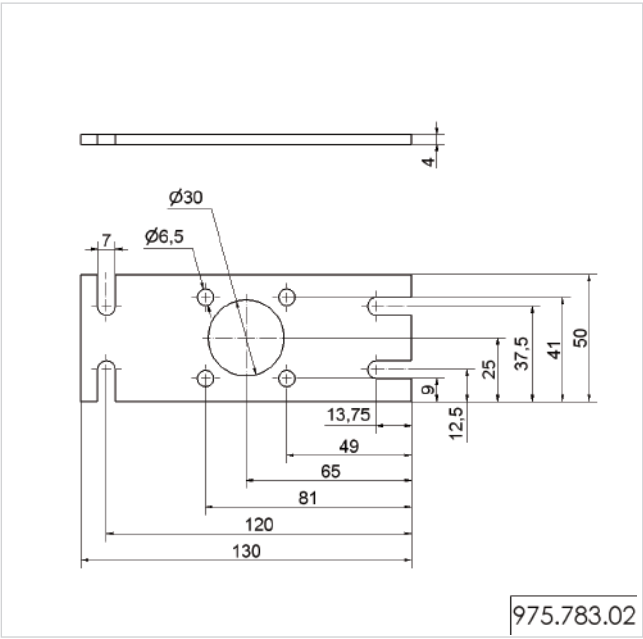

975.783.02

Technical Diagrams

ADDITIONAL INFORMATION:

You are welcome to request the technical diagrams in digital form. The relevant 3D models, instruction leaflets and connection diagrams can be obtained from us or downloaded from our homepage at any time.

Technical Diagrams

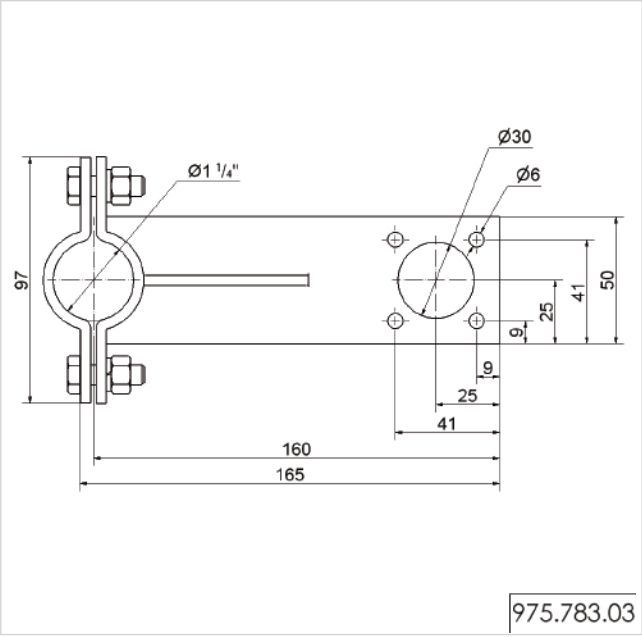

975.783.03

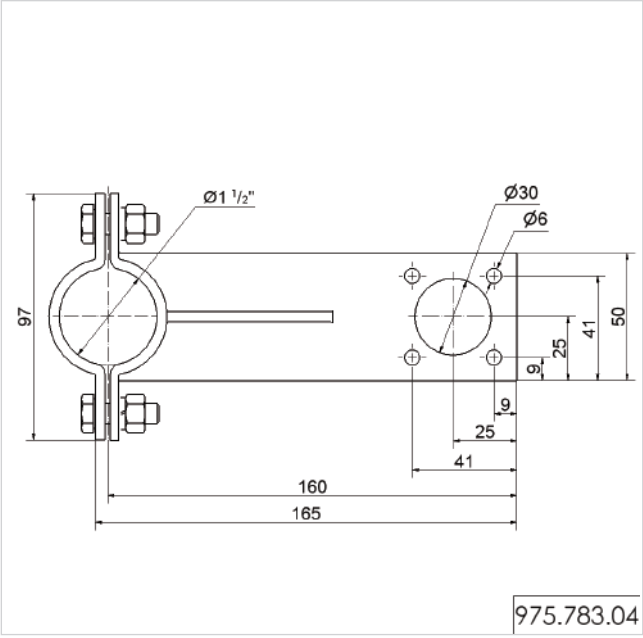

975.783.04

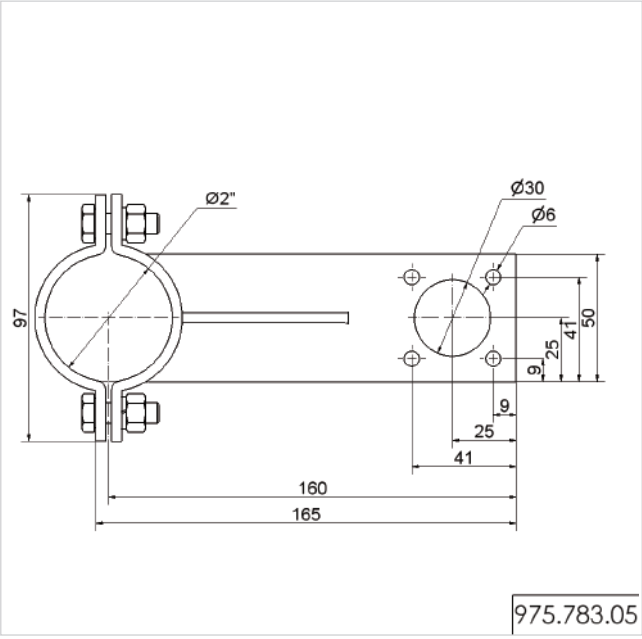

975.783.05

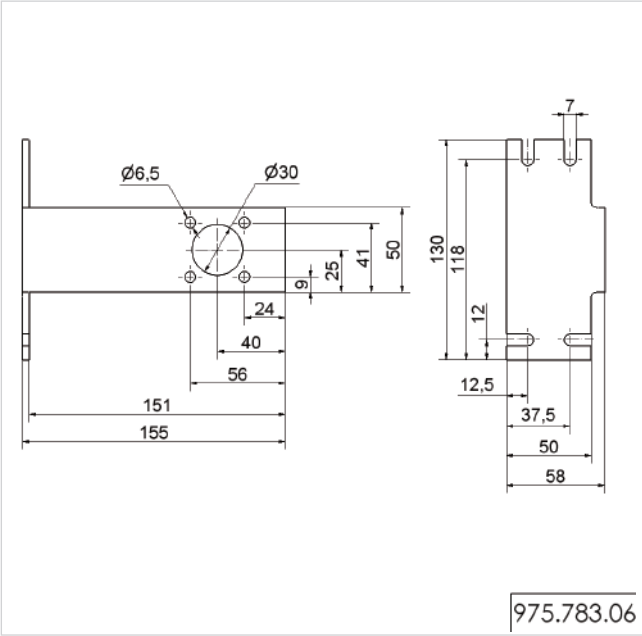

975.783.06

WERMA SIGNALTECHNIK

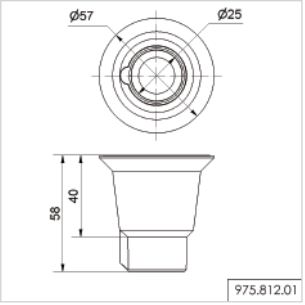

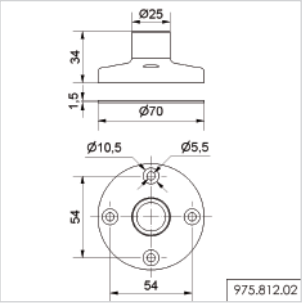

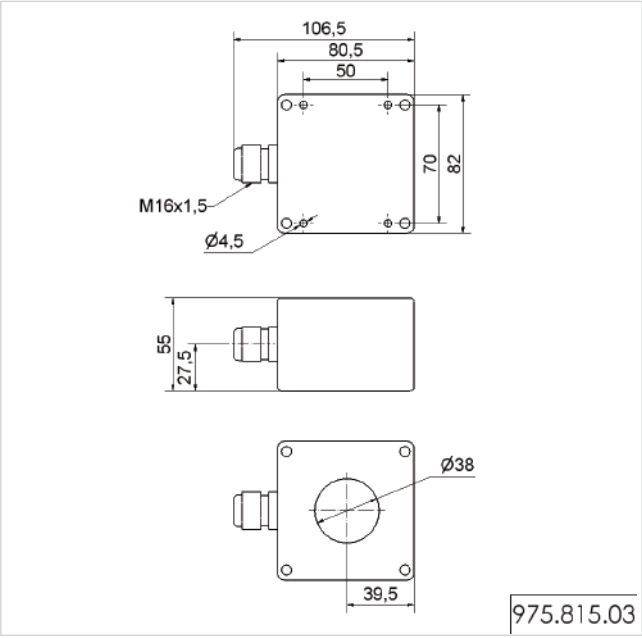

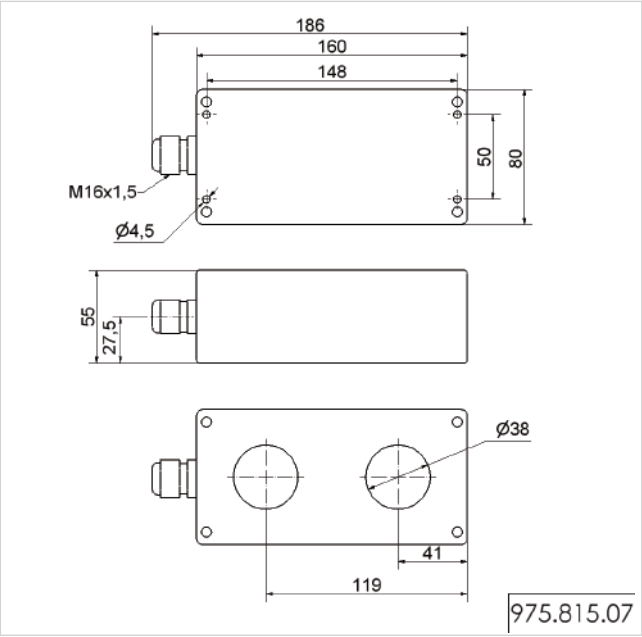

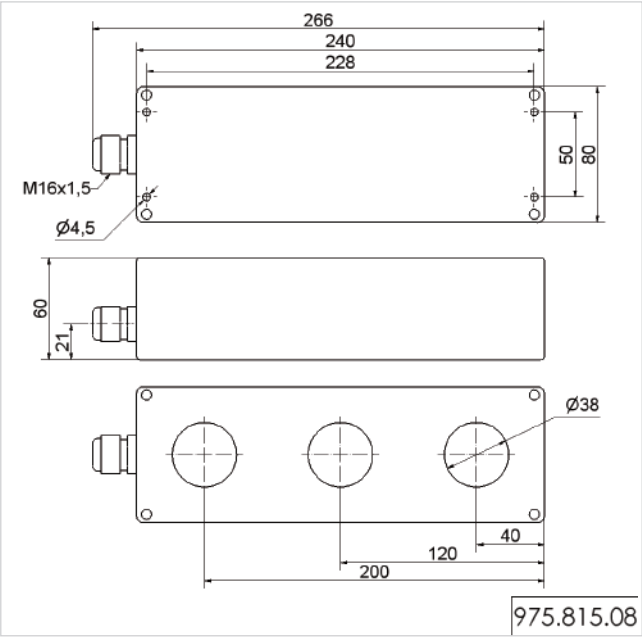

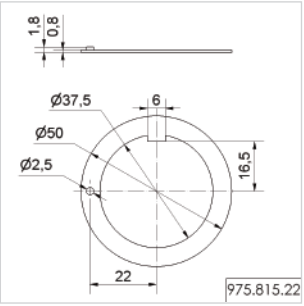

ADDITIONAL INFORMATION:

You are welcome to request the technical diagrams in digital form. The relevant 3D models, instruction leaflets and connection diagrams can be obtained from us or downloaded from our homepage at any time.

Technical Diagrams

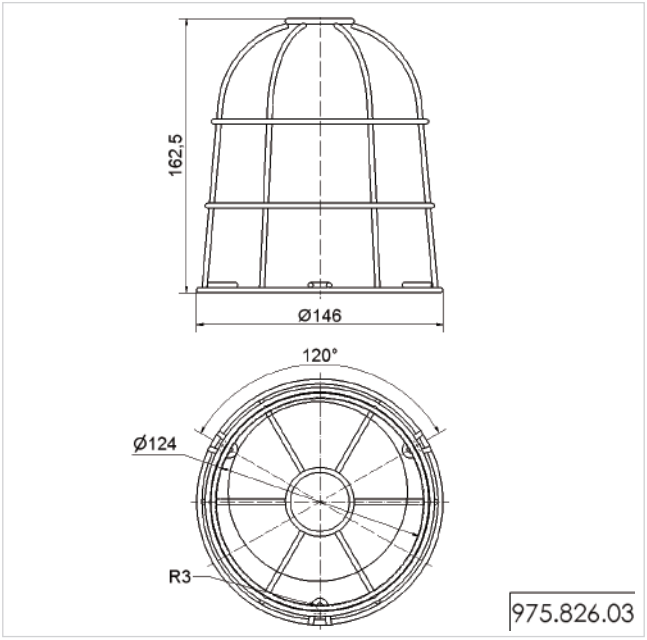

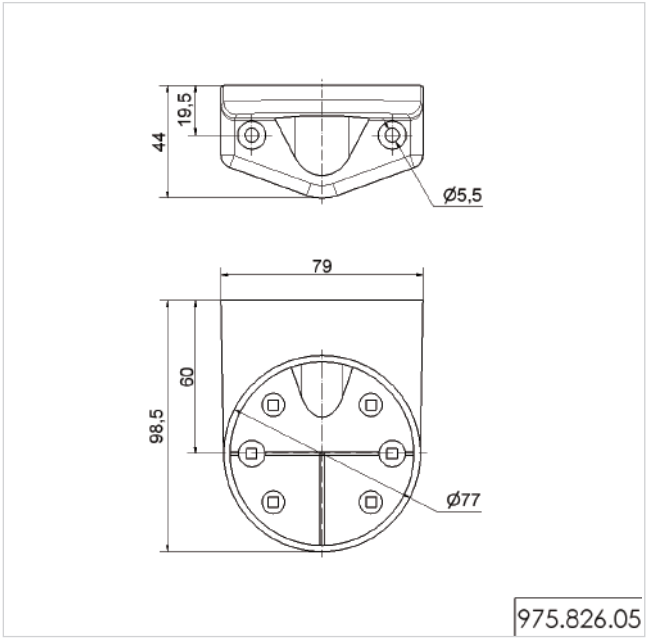

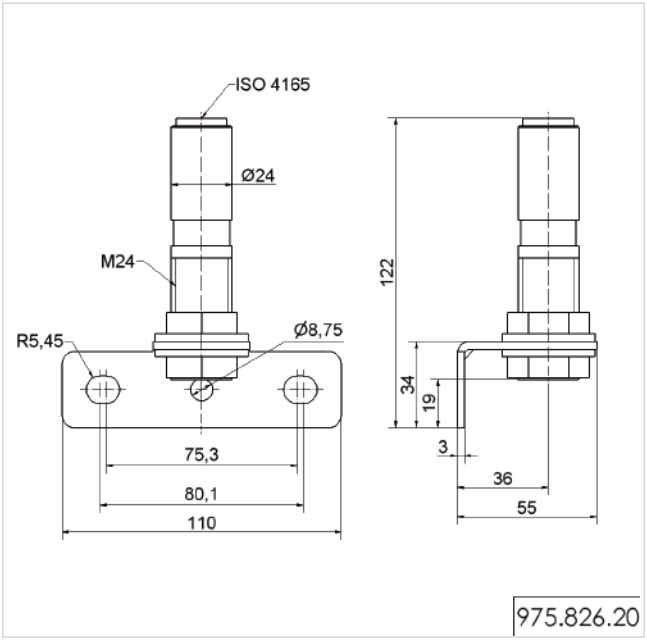

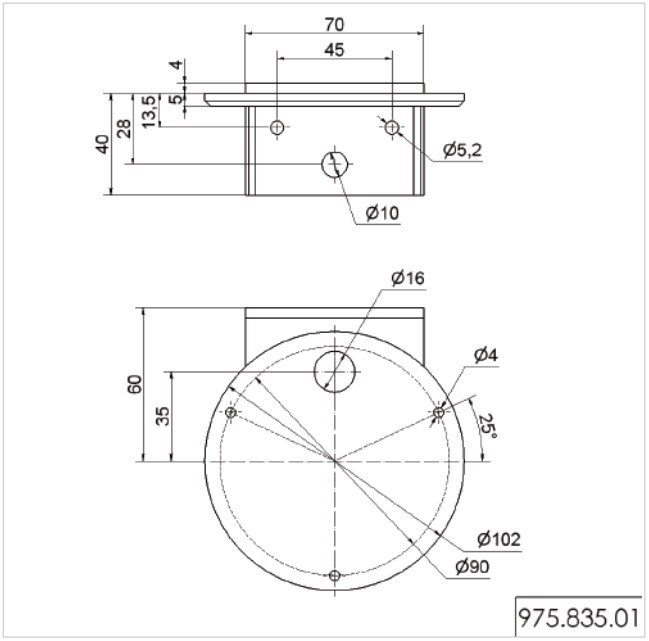

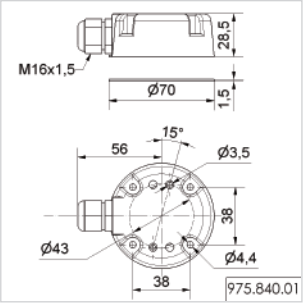

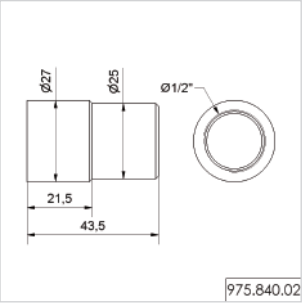

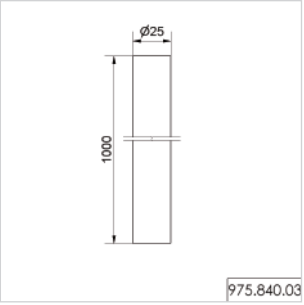

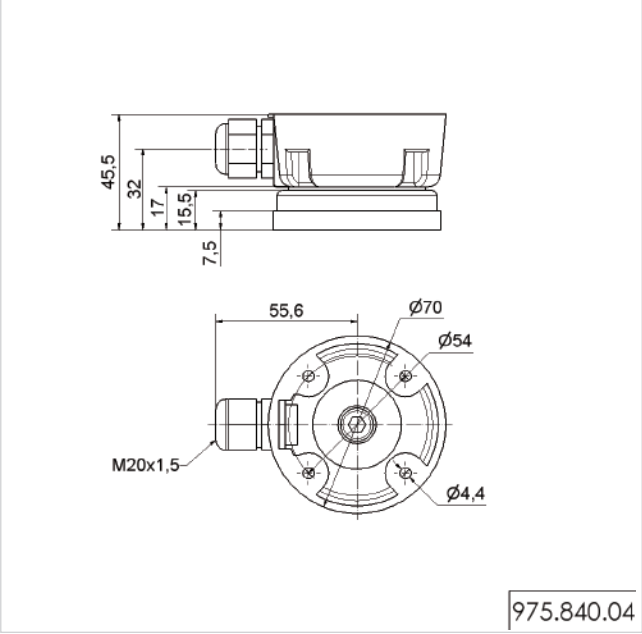

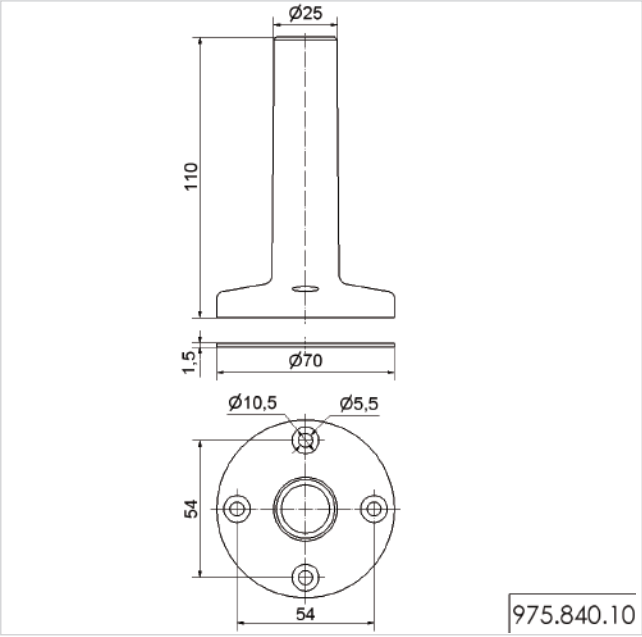

ADDITIONAL INFORMATION:

You are welcome to request the technical diagrams in digital form. The relevant 3D models, instruction leaflets and connection diagrams can be obtained from us or downloaded from our homepage at any time.

Technical Diagrams

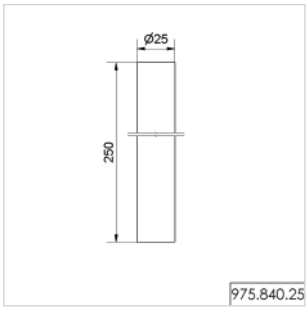

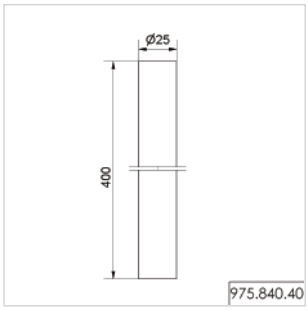

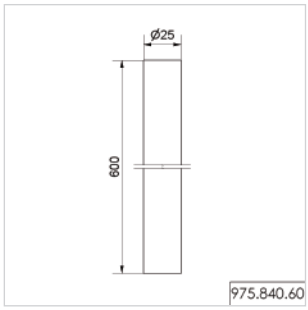

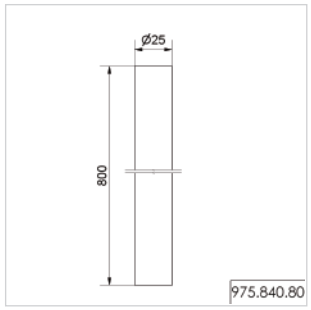

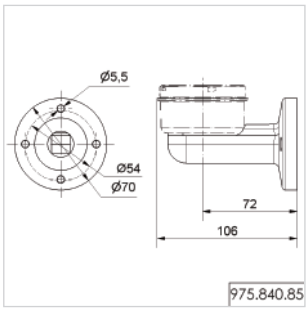

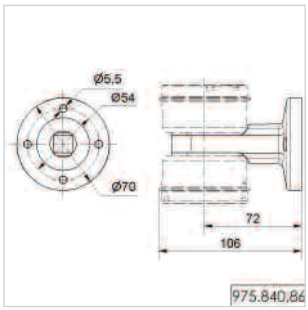

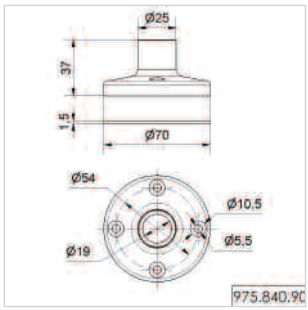

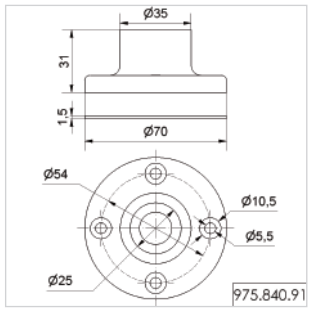

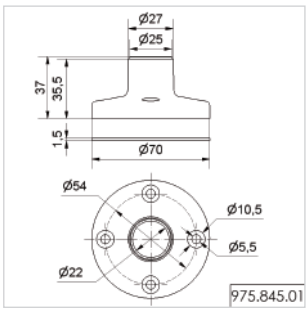

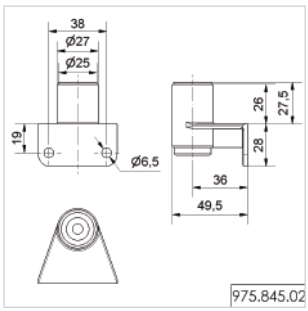

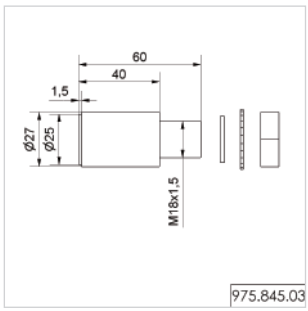

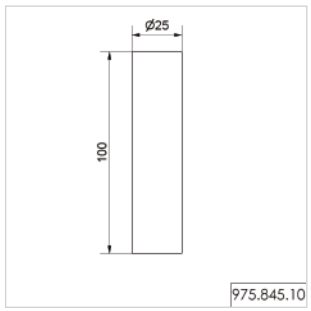

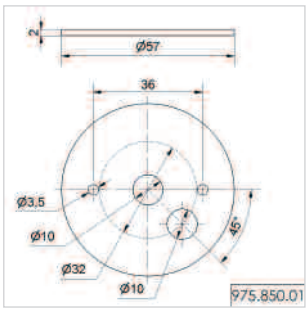

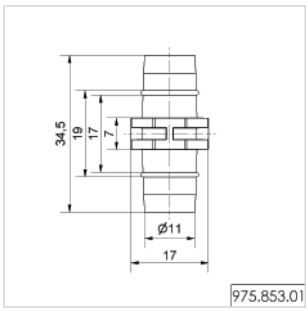

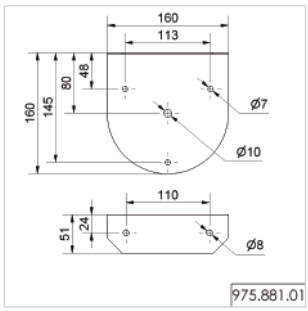

WERMA SIGNALTECHNIK

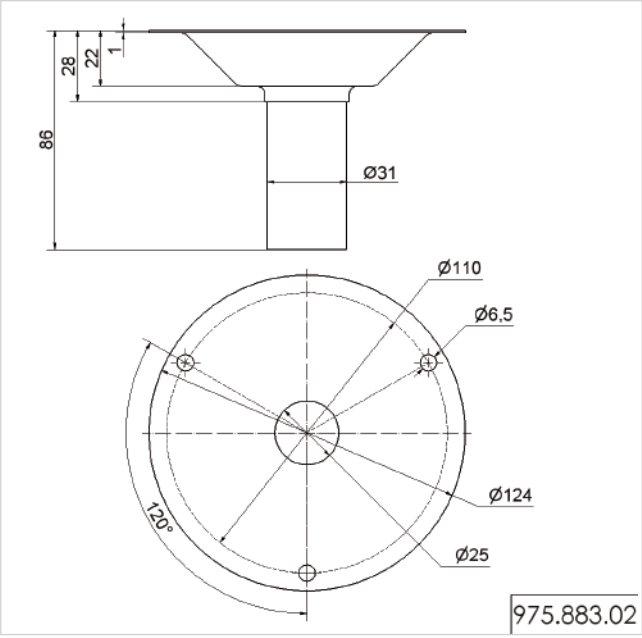

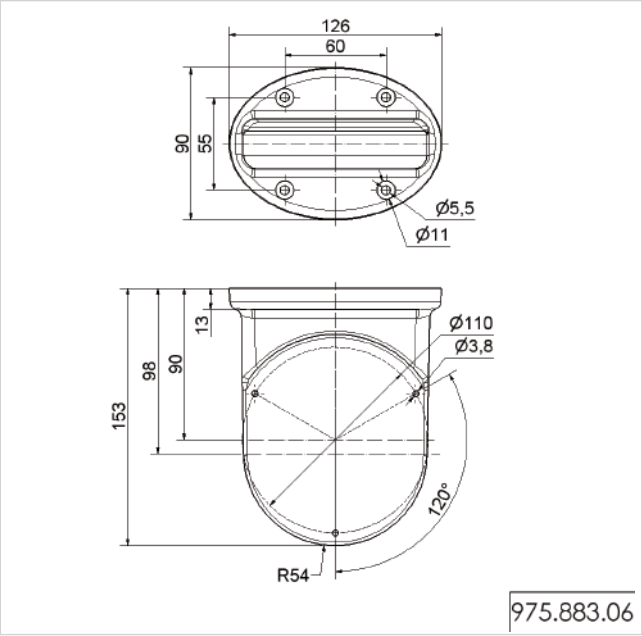

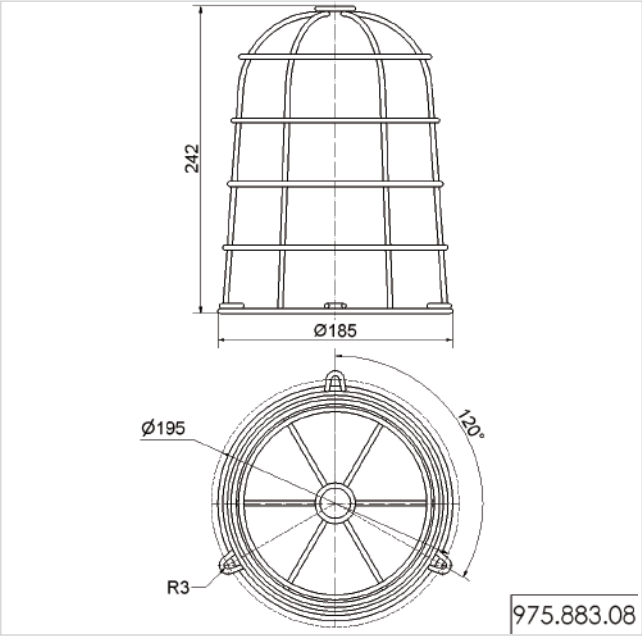

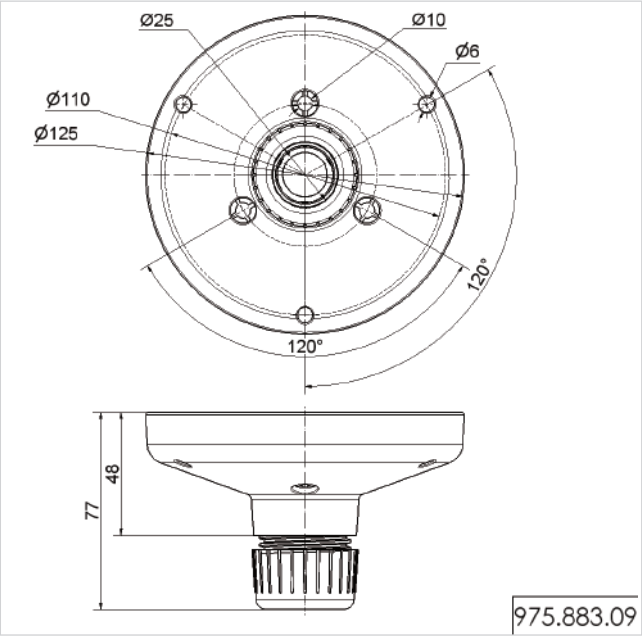

ADDITIONAL INFORMATION:

You are welcome to request the technical diagrams in digital form. The relevant 3D models, instruction leaflets and connection diagrams can be obtained from us or downloaded from our homepage at any time.

Technical Diagrams

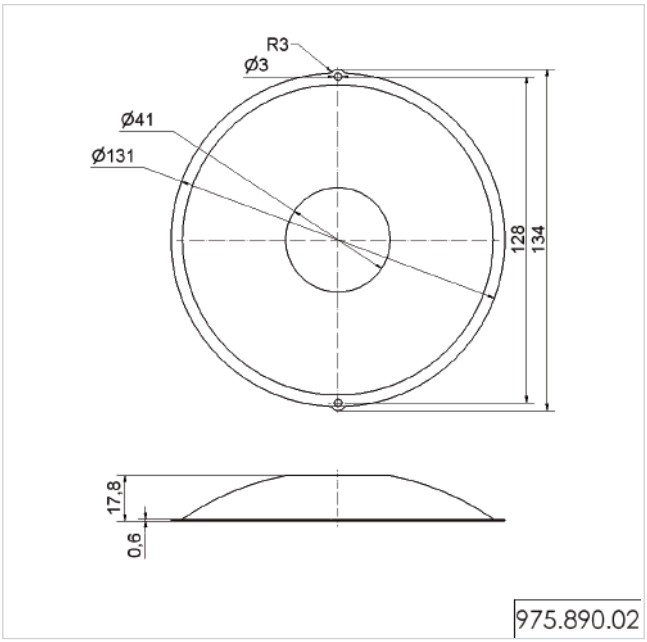

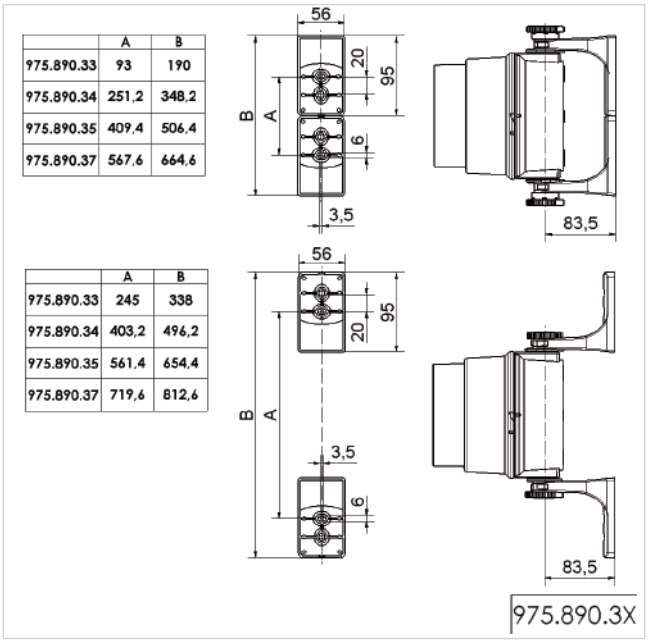

	A	B
975.890.33	93	190
975.890.34	251,2	348,2
975.890.35	409,4	506,4
975.890.37	567,6	664,6

	A	B
975.890.33	245	338
975.890.34	403,2	496,2
975.890.35	561,4	654,4
975.890.37	719,6	812,6

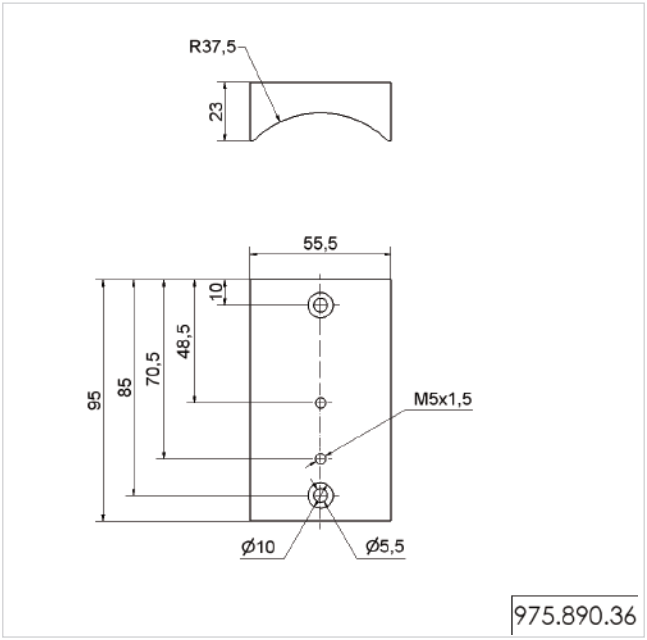

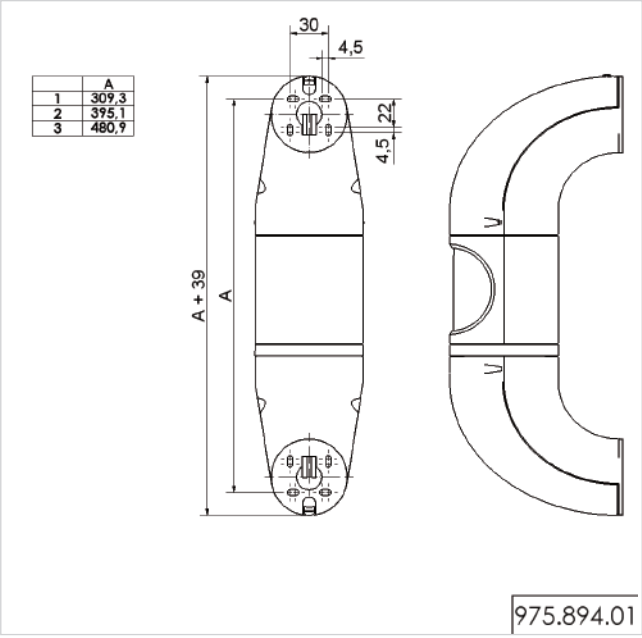

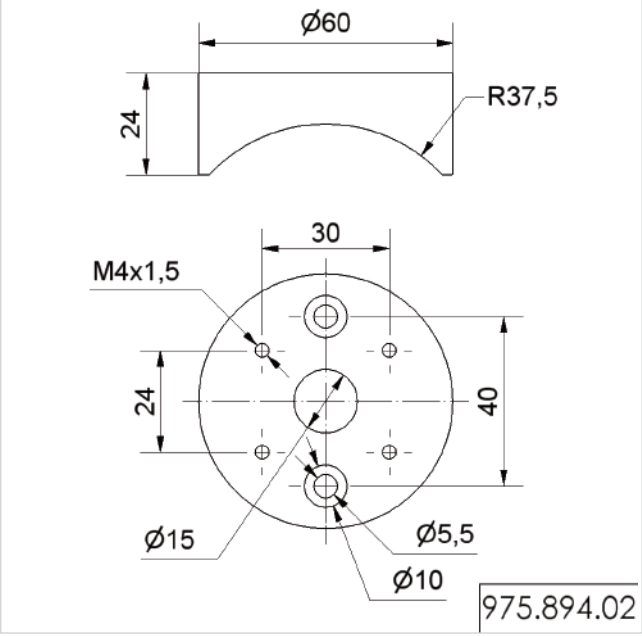

ADDITIONAL INFORMATION:

You are welcome to request the technical diagrams in digital form. The relevant 3D models, instruction leaflets and connection diagrams can be obtained from us or downloaded from our homepage at any time.

Our subsidiaries

A GLOBAL PRESENCE



SWITZERLAND

WERMA Signaltechnik
Niederlassung Neuhausen a. Rhf.
Rheingoldstrasse 50
CH-8212 Neuhausen am Rheinfall
Switzerland
Tel. +41 (0) 52 674 00 60
Fax +41 (0) 52 674 00 66
E-Mail: info@werma.ch
Internet: www.werma.ch



UNITED KINGDOM

WERMA (UK) Ltd.
Linnell Way
Telford Way Industrial Estate
Kettering
Northamptonshire
NN16 8PS
United Kingdom
Tel. +44 (0) 1536 486 930
Fax +44 (0) 1536 514 810
E-Mail: uksales@werma.co.uk
Internet: www.werma.co.uk



CHINA

WERMA (Shanghai) Co., Ltd.
No. 8, High Technology Zone,
No. 503, Meinengda Road,
Songjiang, Shanghai, P. R. C
201613
China
Tel. +86 (0) 21 5774 0024
Fax +86 (0) 21 5774 6601
E-Mail: info@werma.com.cn
Internet: www.werma.com.cn



FRANCE

WERMA SARL
56, Rue Colière
F-69780 Mions
France
Tel. +33 (0) 4 72 22 37 37
Fax +33 (0) 4 72 22 37 64
E-Mail: info@werma.fr
Internet: www.werma.fr



BELGIUM - NETHERLANDS - LUXEMBOURG

WERMA BENELUX bvba
Industrieweg 78-80 Bus 2
B-9032 Wondelgem
Belgium
Tel. +32 9 220 31 11
Fax. +32 9 222 81 11
E-Mail: info@wermabenelux.com
Internet: www.wermabenelux.com



Sales Network – Germany

Post code	Your contact
01 - 04 08 / 09	IBA Ingenieurbüro Dipl.-Ing. H. Ch. Adlung Hüttenstr. 16 01979 Lauchhammer - Ost Tel. (0 35 74) 46 75 212 Fax (0 35 74) 46 75 213 E-Mail: info@ib-adlung.de Internet: www.ib-adlung.de
06 / 07 39 98 / 99	Ingenieurbüro Automatisierungstechnik Dr.-Ing. Klaus Zimmermann Hauptstr. 15 06493 Neudorf Tel. (03 94 84) 63 64 Fax (03 94 84) 63 19 E-Mail: ib-zimmermann@gmx.de
10 - 16	Dipl.-Ing. Karin Leichner Industrievertretung Heinrich-Heine-Str. 17 14513 Teltow Tel. (0 33 28) 30 18 26 Fax (0 33 28) 47 05 52 E-Mail: info@leichner-iv.de Internet: www.leichner-iv.de
17 - 25	HK Industrievertretungen Marc Oliver Kieckbusch e.K. Pfeilshofer Weg 40 22391 Hamburg Tel. (0 40) 6 00 71 21 Fax (0 40) 6 00 71 22 E-Mail: hk-industrie@t-online.de Internet: www.hk-industrievertretungen.de
26 - 34 37 / 38 57	Industrievertretung Karsten Prokot Osterwalder Str. 8 30827 Garbsen Tel. (0 51 31) 9 26 98 Fax (0 51 31) 76 28 E-Mail: info@prokot-gmbh.de Internet: www.prokot-gmbh.de
41 - 44 50 - 54 56, 58/59	PS Industrievertretungen Peter Schulz Rathausstr. 19 b 52459 Inden/Altdorf Tel. (0 24 65) 90 50 00 Fax (0 24 65) 90 52 50 E-Mail: schulz.inden@t-online.de
40 45 - 49	KWS - Elektronik Wolfgang Schumacher Saarstr. 19 a 53919 Weilerswist Tel. (0 22 54) 33 80 Fax (0 22 54) 18 58 E-Mail: k-w-s-@t-online.de Internet: www.kws-elektronik.com
35/36/55 60 - 69 97	IBV Gerhard Becker e.K. Innerer Ring 6 63486 Bruchköbel Tel. (0 61 81) 97 44 - 0 Fax (0 61 81) 97 44 - 50 E-Mail: info@ibv-becker.de Internet: www.ibv-becker.de
80 - 96	GT-Glas GmbH Industrie- & Handelsvertretung Flößerstr. 5 86415 Mering Tel. (0 82 33) 99 57 Fax (0 82 33) 3 00 15 E-Mail: info@gt-glas.de Internet: www.gt-glas.de

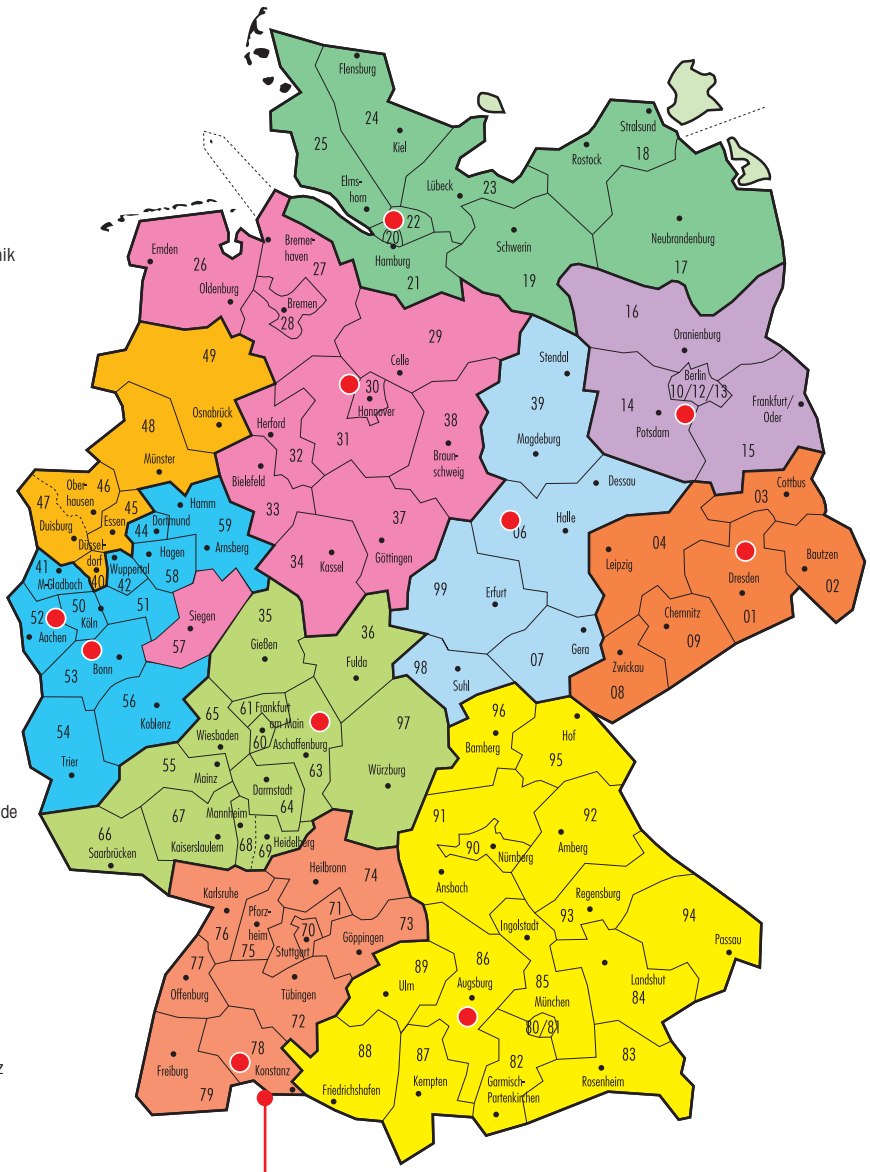

70 - 79	**Location:** WERMA Signaltechnik GmbH + Co. KG Dürbheimer Str. 15 78604 Rietheim-Weilheim Tel. (0 74 24) 95 57-0 Fax (0 74 24) 95 57-44 E-Mail: info@werma.com Internet: www.werma.com

Sales Network - Worldwide

ARGENTINA
Camarda P.A.
Margarita Weild 1950
B1824 KNF-Lanús Este, Buenos Aires
Tel. +54 114241-5558
Fax +54 114249-4860
Internet: www.camarda-sa.com
E-Mail: info@camarda-sa.com

AUSTRALIA / NEW ZEALAND
Balluff-Leuze Pty. Ltd.
12 Burton Court,
Bayswater 3153
Australia
Tel. +61 3 97 20 41 00
Fax +61 3 97 38 26 77
Internet: www.balluonwardscom.au
E-Mail: sales@balluonwardscom.au

AUSTRIA
Braun & Braun e. U.
Heiligenstädterstraße 173
A-1190 Wien
Tel. +43 1 370 45 37
Fax +43 1 370 55 78
Internet: www.braun-braun.at
E-Mail: office@braun-braun.at

BELARUS
DEMS
18, P.Brovka Str.,
220013 Minsk
Tel. +375(17) 296 62 31; 296 69 16
Fax +375(17) 296 62 31; 296 69 16
Internet: www.dems.by
E-Mail: sales@dems.by

BELGIUM
WERMA BENELUX bvba
Industrieweg 78-80 Bus 2
B-9032 Wondelgem
Belgien
Tel. +32 9 220 31 11
Fax +32 9 222 81 11
Internet: www.wermabenelux.com
E-Mail: info@wermabenelux.com

BRAZIL
Euchner Comércio de
Componentes Electronicos Ltda
Av. Prof. Luís Ignácio Anhaia Mello,
4387 São Paulo SP
Cep. 03295-010
Tel. +55 11 69 18 22 00
Fax +55 11 61 01 06 13
E-Mail: werma@euchner.com.br

Choice Tech Ind. e Comercio
Rua Curupaitis
80310-180 Curitiba
Toll Free SP : 0800 643 68 11
Tel. +55 41 3015 7953
Fax +55 41 3015 7853
Internet: www.choicetech.com.br
E-Mail: flavio@choicetech.com.br

BULGARIA
Akhnaton Co. Ltd.
Andrej Ljapchev blvd. 4
BG-1756 Sofia
Tel. +359 2 817 6015
Fax +359 2 817 699
Internet: www.akhnaton.biz
E-Mail:n.ivanov@akhnaton.biz

CANADA
IAC & Associates Inc.
2180 Fasan Drive
Oldcastle, Ontario NOR 1LO
Canada
Tel. +1 519 737 0311
Fax +1 519 737 0314
Internet: www.iacnassociates.com
E-Mail: sales@iacnassociates.com

CHILE
ATECMIN Ltda.
Avenida Simon Bolivar 2781
Ñuñoa
Santiago
Tel. +56 (2) 2693 237
Fax +56 (2) 2693 226
Internet: www.atecmin.cl
E-Mail: atecmin@atecmin.cl

CHINA
WERMA (Shanghai) Co., Ltd.
No. 8, High Technology Zone,
No. 503, Meinengda Road,
Songjiang, Shanghai, P. R. C
201613
Tel. +86 (0) 21 5774 0024
Fax +86 (0) 21 5774 6601
Internet: www.werma.com.cn
E-Mail: info@werma.com.cn

COLUMBIA
EIMPSA
Electricos Importados P.A.
Calle 15 No 13-50
Bogota, Colombia
Tel. +57 (1) 32752 22
Fax +57 (1) 334 06 86
Internet: www.eimpsa.com.co
E-Mail: jguerrero@eimpsa.com.co

CROATIA
VARGA Elektronik d.o.o.
Draskoviceva 14
40325 Draskovec
Croatia
Tel. +385 40 64 31 89
Fax +385 40 64 32 93
Internet: www.varga-elektronik.hr
E-Mail: info@varga-elektronik.hr

CZECH REPUBLIC
AXIMA, spol. s r o.
Industrial Automation
Vídenská 125
CZ-619 00 Brno
Tel. +420 547 42 40 21
Fax +420 547 42 40 23
Internet: www.axima.cz
E-Mail: obchod@axima.cz

DENMARK
Robotek Automation A/S
Blokken 31
DK-3460 Birkeroed
Tel. +45 45 90 34 00
Fax +45 45 90 34 01
Internet: www.robotech.dk
E-Mail: info@robotech.dk

ECUADOR
Intelware P.A.
Cdla. Los Alamos
Av. La Democracia
Mz. 15B - Solar 9 - 2 piso - Officina #201
Guayaquil
Tel. +593 4 2393 316
Fax +593 4 2393353
Internet: www.intelware.cc
E-Mail: jacinto.echerria@intelware.cc

EGYPT
Electric Technology
Rawdat Semouha Building
5 Fawzy Moaaz Street – Semouha
11111 Alexandria, Egypt
Tel. +2 03 424 82 24
Fax +2 03 424 85 22
Internet: www.electech.com.eg
E-Mail: electech@electech.com.eg

ESTONIA
RONEX Ltd.
Kiisa 8
11313 Tallinn
Estonia
Tel. +372 655 6672
Fax +372 655 6673
Internet: www.ronex.ee
E-Mail: ronex@ronex.ee

FINLAND
SKS Automaatio Oy
PL 122
FIN-01721 Vantaa
Tel. +358 20 764 61
Fax +358 20 764 68 20
Internet: www.sks.fi
E-Mail: automaatio@sks.fi

FRANCE
WERMA SARL
56, Rue Colière
F-69780 Mions
Tel. +33 (0) 4 72 22 37 37
Fax +33 (0) 4 72 22 37 64
Internet: www.werma.fr
E-Mail: info@werma.fr

GREECE
SASTA Sakelliou Sp. & Co. O.E.
Konstantinidou 15B
GR-104 45 K. Patissia, Athens
Tel. +30 210 8322611
Fax +30 210 8325444
Internet: www.sasta.gr
E-Mail: sasta@otenet.gr

HUNGARY
Mile Kft.
Màdi u. 52
H-1104 Budapest
Tel. +36 1 431 9800
Fax +36 1 431 9817
Internet: www.mile-kft.hu
E-Mail: milekft@mile-kft.hu

INDIA
Rajesh & Company
Exports, Imports & Representations
211, Mahavir Commercial
Complex
M.G. Road, Oonwards Derasas Lane,
Ghatkopar (East)
Mumbai 400 077
Tel. +91 22 25012848
Fax +91 22 25012848
Internet: www.rajeshcompany.com
E-Mail: hardchem@bom5.vsnl.net.in

IRELAND
ATC Automation Ltd.
Industrial Components Division
ATC House
Broomhill Drive
Tallaght
Dublin 24
Ireland
Tel. +353 1462 5111
Fax +353 1467 8333
Internet: www.atc.ie
E-Mail: sales@atcautomation.ie

ISRAEL
T. Golan Technologies Ltd.
20 Ha'taat St. Bell-House
INDUSTRIAL ZONE KFAR-SABA
P.O. Box 210
IL-Ra'anana 44425
Tel. +972 9 76 62 003
Fax +972 9 76 69 965
Internet: www.gtelec.co.il
E-Mail: yariv@gtelec.co.il

A.U. Shay
23 Imber st.
Petach-Tikva 49222
Tel. +972 3 92 23 105
Fax +972 3 92 34 601
Internet: www.uriel-shay.com
E-Mail: ilans@uriel-shay.com

ITALY
Southern Italy
c.R.A. Srl.
Via delle Mammole, 10 Z.I.
70026 Modugno, BA
Tel. +39 080 537 48 89
Fax +39 080 537 15 93
E-Mail: info@craitaly.com

Northern Italy
IMYTECH Srl.
Viala Vicenza, 30
36031 Dueville, VI
Tel. +39 0444 361 312
Fax +39 0444 592 272
E-Mail: info@imytech.it

JAPAN
Japan Machinery Company
5-6 Ginza 8-chome
Chuo-ku
Tokyo 104-0061 Japan
Tel. +81-3-3573-5421
Fax +81-3-3574-9185
Internet: www.japanmachinery.com
E-Mail: jmctok@japanmachinery.com

KAZAKSTAN
ETC CONTACT L.L.c.
Suynbaya str. 50, 3rd floor
("KazTorgOborudovanie")
050000 Almaty
Tel. +7 (727) 382 15 05; 382 17 65
Mobil 7 702 220 81 00
Internet: www.etc-contact.kazprom.net
E-Mail: a.nossov@etc-contact.kz



Sales Network - Worldwide

KOREA
KC Enterprises Co.Ltd.
404 Royal Plaza
864-1, Janghang, Ilsan, Goyang
Gyeonggi-Do, Korea
Tel. +82 (0) 31 903 3731
Fax +82 (0) 31 908 3731
Internet: www.kcent.co.kr
E-Mail: port@kcent.co.kr

KUWAIT
APECO
AL-Ammar & Partners Electrical Co.
P.O. Box 1871
13019 Safat
Kuwait
Tel. +965 483 0122
Fax +965 484 1818
Internet: www.apecokuwait.com
E-Mail: alammar@qualitynet.net
E-Mail: info@apecokuwait.com

LATVIA
EC Systems Ltd.
4A Katlakalna Str.
LV-1073, Riga
Tel. +371 6724 1231
Fax +371 7248 478
Internet: www.ecsystems.lv
E-Mail: info@ecsystems.lv

LITHUANIA
UAB "ELINTA"
Terminalo g. 3, Biruliskiu k.,
Karmelavos sen.,
T-54469 Kauno raj.
Tel. + 370 37 351 987
Fax +370 37 452 780
Internet: www.elinta.eu
E-Mail: info@elinta.lt

LUXEMBOURG
WERMA BENELUX bvba
Industrieweg 78-80 Bus 2
B-9032 Wondelgem
Belgien
Tel. +32 9 220 31 11
Fax +32 9 222 81 11
Internet: www.wermabenelux.com
E-Mail: info@wermabenelux.com

MALAYSIA
AdvFit
Automation Sdn Bhd.
43, 1st Floor, Persiaran Mahsuri 1/1
Sunway Tunas, Bayan Lepas
11900 Penang
Tel. +60 (4) 6446113
Fax +60 (4) 6430113
Internet: www.advfit.com
E-Mail: sales@advit.com

MEXICO
Smart Sonic P.A de c.V.
San Andres 229
Col. Res. Nueva California
Escobedo, N.L. M. c.P. 66055
Tel. +52 (81) 8307 2233
Fax +52 (81) 8307 2903
Internet: www.smartsonicsupply.com
E-Mail: info@smartsonicsupply.com

NETHERLANDS
WERMA BENELUX bvba
Industrieweg 78-80 Bus 2
B-9032 Wondelgem
Belgien
Tel. +32 9 220 31 11
Fax +32 9 222 81 11
Internet: www.wermabenelux.com
E-Mail: info@wermabenelux.com

NORWAY
J.F. Knudtzen AS
Billingstadsletta 97
1396 Billingstad
Tel. +47 66 98 33 50
Fax +47 66 98 09 55
Internet: www.jfknudtzen.no
E-Mail: firmapost@jfknudtzen.no

PERU
Fametal P.A.
Prolong. Antonio Bazo 1524
La Victoria
Lima 13
Peru
Tel. +51 00511 47 37 957
Fax +51 00511 47 32 329
Internet: www.fametal.com
E-Mail: fametal@fametal.com

PHILIPPINES
Zenith International Philippines, Inc.
Suite 301 Le Mar Ben II Building
747 San Bernardo St., Sta. Cruz, Manila
Philippines 1003
Tel. +632 733 4526
Fax +632 733 2901
Internet: www.zenithelectrical.com
E-Mail: partners@zenithinternational.ph

POLAND
INS-TOM Sp. z o. o.
Ul. Brukowa 20
PL-91-341 Lódz
Tel. +48 42 640 75 86
Fax +48 42 640 76 22
Internet: www.instom.com.pl
E-Mail: biuro@instom.com.pl

PORTUGAL
Costa, Leal e Victor, Lda
Rua Augusto Lessa 269
P-4200-100 Porto
Tel. +351 225 508 520
Fax +351 225 024 005
Internet: www.clv.pt
E-Mail: clv@clv.pt

ROMANIA
ALISAN COMIMPEX SRL
7 Pipera Rd., Bl 2D, Ap. 16
RO-Bucharest 1
Tel. +4021 232 35 61
Fax +4021 232 91 23
Internet: www.alisan.ro
E-Mail: office@alisan.ro

RUSSIA
The contact details for your
local sales partner can be
found at www.werma.com
or www.werma.ru under
the heading "contact".

SWEDEN
INKOM
Industrikomponenter AB
Gårdsvägen 4
SE-16970 Solna
Tel. +46 8 514 844 00
Fax +46 8 514 844 01
Internet: www.inkom.se
E-Mail: info@inkom.se

SINGAPORE
Sentronics Automation & Mktg. Pte Ltd
Blk 3, Ang Mo Industrial Park 2A, #05-06
Ang Mo Kio Tech 1
Singapore 568050
Singapur
Tel. +65 6744 8018
Fax +65 6744 1929
Internet: www.sentronics-asia.com
E-Mail: sentronics@pacific.net.sg

SLOVAKIA
Amicus SK P.r.o.
Koreszkova 9
SK-909 01 Skalica
Tel. +42 1 34 66 48 644
Fax +42 1 34 66 48 530
Internet: www.amicussk.sk
E-Mail: amicus@amicussk.sk

SLOVENIA
Terna d.o.o., Ljubljana
Kolezijska Ul. 23
SLO-1000 Ljubljana
Tel. +386 1 28 33 813
Fax +386 1 28 33 815
Internet: www.terna.si
E-Mail: info@terna.si

SPAIN
Fernando Carrasco, P.A.
c/Serrano 44
E-08031 Barcelona
Tel. +34 93 243 1980
Fax +34 93 243 1982
Internet: www.fcarrasco.es
E-Mail: fcarrasco@fcarrasco.es

SOUTH AFRICA
RUBICON
Electrical & Electronic Distributors
4 Reith Street, Sidwell
6061 Port Elizabeth
South Africa
Tel. +27 41 4514359
Fax +27 41 4511296
Internet: www.rubiconelectrical.co.za
E-Mail: sales@rubiconelectrical.co.za

SWITZERLAND
WERMA Signaltechnik
Niederlassung Neuhausen am Rhf.
Rheingoldstrasse 50
CH-8212 Neuhausen am Rheinfall
Tel. +41 (0) 52 674 00 60
Fax +41 (0) 52 674 00 66
Internet: www.werma.ch
E-Mail: info@werma.ch

THAILAND
Compomax Company Ltd.
16 Soi Ekamai 4
Sukhumvit 63 Rd
Prakanongnua, Vadhana,
Bangkok 10110
Tel. +66 2 726 95 95
Fax +66 2 726 98 002
Internet: www.compomax.co.th
E-Mail: import@compomax.co.th

TAIWAN
Canaan Electric Corp.
6F-5, No. 63, Sec. 2
Chang-An East Road
Taipei 104, Taiwan, R.O.c.
Tel. +886 225 082 331
Fax +886 225 084 744
Internet: www.canaan-elec.com.tw
E-Mail: canaano@ms15.hinet.net

Sunlux ACE Industries Co. Ltd
No. 1 Alley 2, Lane 391
Chuan-Chin Road
Taipei 110
Tel. +886 2 2799 7727
Fax +886 2 2729 1127
Internet: www.sunluxace.com.tw
E-Mail: sunlux@ms14.hinet.net

TURKEY
Protek Teknik Elektrik Ltd.
Okçu Musa Cad. Kismet
Han No: 94/2
TR-34420 Karaköy - Istanbul
Tel. +90 212 256 90 91
Fax +90 212 235 46 09
Internet: www.protek-teknik.com.tr
E-Mail: protek@protek-teknik.com.tr

UNITED KINGDOM
WERMA (UK) Ltd.
Linnell Way
Telford Way Industrial Estate
Kettering
Northamptonshire
NN16 8PS
Tel. +44 (0) 1536 486 930
Fax +44 (0) 1536 514 810
Internet: www.werma.co.uk
E-Mail: uksales@werma.co.uk

UKRAINE
VBR Electric
Demiivska Str. 41
03040 Kiev
Tel. +38 (044) 259 04 38; 522 95 24
Fax +38(044) 259 04 38; 522 95 24
Internet: www.vbr.com.ua
E-Mail: office@vbr.com.ua

USA
WERMA USA marketed by
Euchner U.P.A., Inc.
6723 Lyons Street
East Syracuse, NY 13057 USA
Tel. +1 315 701 5802
Fax +1 315 701 0319
Internet: www.euchner-usa.com
E-Mail: info@euchner-usa.com



Terms and Conditions for Delivery and Payment

All supplies and services from our Rietheim, Germany plant are subject to the "General Conditions of Supply for Products and Services of the Electronic Industry" (ZVEI). Any divergent conditions are set in italics.

The foremost articles are listed hereto:

1. General conditions

The scope of the supplies or services (hereinafter called "Supplies") are defined by the written declarations of both parties to the contract. General terms and conditions of the Purchaser apply only where expressly accepted in writing by the Supplier or service provider (hereinafter called "Supplier").

Partial Supplies are permissible where they can be reasonably expected of the Purchaser.

2. Prices and terms of payment

Our prices are net prices, without V.A.T. or packaging charges and are valid from factory premises.

The minimum order sum for inland deliveries is 30.- EUR, for overseas deliveries 130.- EUR. A surcharge of 6.- EUR will be imposed for inland orders of less than the above sum and 13.- EUR for overseas orders of less than the above sum.

All payments are to be effected at the latest within 30 days of the date of invoice unless otherwise stated. WERMA grants 2% discount for payments effected within 14 days from the date of invoice.

Initial deliveries are on the basis of payment in advance or payment on delivery.

3. Retention of title

The items of Supplies (Secured Goods) remain property of the Supplier until each and every claim against the Purchaser to which the Supplier is entitled under this business relationship has been duly satisfied. If the value of all security rights of the Supplier exceeds the value of all secured claims by more than 20%, the Supplier will release a corresponding part of the security rights at the Purchaser's request.

In cases of breaches of liabilities on the part of the Purchaser, in particular a default in payment, the Supplier is entitled to termination and to take back the goods. *The taking back or assertion of the retention of title does not require termination by the Supplier. No termination of contract shall arise in these circumstances or on a seizure of the goods by the Supplier, unless the Supplier should have expressly declared this.*

WERMA's proprietary right expires only upon full payment.

4. Time for delivery and delay

Observance of the *stipulated* time for delivery is conditional upon the timely receipt of all documents, necessary permits and releases, especially of plans to be provided by the Purchaser, as well as fulfilment of the agreed terms of payment and other obligations by the Purchaser.

If non-observance of the time for delivery is due to force majeure such as mobilization, war, riot or similar events, e.g. strike or lock-out, such time shall be extended accordingly.

5. Transfer of risk

Even where "carriage paid" delivery has been agreed, the risk passes to the Purchaser as follows:

If the supply does not include assembly or erection, when goods have been delivered to or picked up by carrier. At the Purchaser's request and expense, supplies can be insured by the Supplier against the ordinary risks of transport.

6. Taking delivery

The purchaser may not refuse acceptance of deliveries on account of minor defects.

Goods may only be returned using the standard postal service and upon agreement with WERMA. A surcharge of 20% of the product value is payable for the return of standard goods, that is at least 30.- EUR to cover the cost of unpacking, checking and re-packing in the interests of the next purchaser. Damaged goods and special articles (i.e. all articles which are not listed with order number in the currently valid catalogue) may not be returned.

7. Warranty

The Supplier shall be liable for material defects as follows:

All those parts or services which display a material defect within the limitation period (regardless of the period of operation) shall at the discretion of the Supplier be improved subsequently without payment, re-delivered or re-rendered, provided that the cause of this was already present at the time of passing of risk.

Claims for material defect shall be barred after 24 months. This shall not apply in as far as statute prescribes longer periods by virtue of sections 438 (1) (2) (builings and building materials), 479 (1) (claim under a right of recourse) and 634a (1) (2) (building defects) BGB.

The Purchaser shall notify the Supplier in writing of material defects without delay.

Payments by the Purchaser may be withheld on notification of defect to such an extent as bears a reasonable relationship to the material defects arising. The Purchaser may only withhold payments if notification of a defect is given, for which there is unquestionable justification. The Supplier may require the Purchaser to reimburse the expenses arising from cases where the notification of defect is unjustifiable.

The Supplier shall initially always be allowed the oppotunity of subsequent performance within a reasonable period of time. The Purchaser may rescind the contract or reduce the payment regardless of any claims for damages in pursuance of section 9 hereto, if the subsequent performance shall fail to be effective.

Claims based on a defect shall not arise merely for a slight discrepancy from the agreed characteristic, for merely slight impairment to usefulness, for natural wear of loss which arises following the passing of risk as a consequence of improper or negligent treatment, excessive use, unsuitable operating materials, defective building work, unsuitable building ground or which arise by reason of particular external influences which are not anticipated by the contract, as well as for defects in software which are not reproducable. No claims based on a defect shall similarly arise for the consequences resulting from improper modifications made or improper repair work carried out by the Purchaser or third party.

Claims by the Purchaser for expenses necessitated for the purposes of subsequent performance, in particular costs of carriage, transport, work and materials are excluded to such an extent as the expenses increase because the subject matter of the delivery has been subsequently conveyed to a location other than the place of business of the Purchaser, unless the conveyance corresponds with its use according to contract.

Legal claims by the Purchaser against the Supplier under a right of recourse shall only arise inasmuch as the Purchaser has not entered into any agreements with its custoner over and above the statutory claims arising for defects. The preceding paragraph shall further apply correspondingly to the extent of the claims under a right of recourse of the Purchaser against the Supplier.

Furthermore, section 9 hereto (further liability) shall apply to claims for damages. More far-reaching or further claims by the Purchaser agains the Supplier and those acting on its behalf on account of a defect other than those regulated in this section are excluded.

8. Impossibility of performance, revision of contract

The Purchaser may demand damages to such extent as the delivery is impossible unless the Supplier is not responsible for the impossibility. The claim for damages of the Purchaser shall however be limited to 10 % of the value of that part of the delivery which can not be taken into useful operation by reason of the impossibility. This limitation shall not apply in so far as liability is imposed by law in cases of wilfulness, gross negligence or on account of death, physical injury or impairment to health. An alteration in the onus to proof to the detriment of the Purchaser is not connected herewith. The right of the Purchaser to rescind the contract shall remain unaffected.

Where unforeseeable events as described in Art. 4 paragraph 2 substantially change the economic importance or the contents of the supplies or considerably affect the Supplier's business, the contract will be adapted accordingly with due regard to the principle of good faith. Where this is not economically reasonable, the Supplier has the right to terminate the contract. If the Supplier wants to make use of this right of termination, he has to notify the Purchaser in writing immediately after becoming aware of the significance of the event. This applies even where at first an extension of the delivery time had been agreed with the Purchaser.

9. Further liability

Claims by the Purchaser for compensation and reimbursement of expenses (hereinafter called "further liability") on whatever legal basis, in particular on account of breach of duties arising out of the contractual obligation and from tortious acts, are excluded.

This shall not apply where liability is imposed by law, for example, pursuant to the law of product liability, in cases of wilfulness, gross negligence, on account of death, physical injury or impairment to health, or on account of breach of material contractual obligations. The further liability for breach of material contractual obligations shall however be limited to forseeable damage typical for a contract, unless wilfulness or gross negligence is present or liability exists on account of death, physical injury or impairment to health. An alteration in the onus of proof to the detriment of the Purchaser is not connected with the said provisions.

10. Competent Court

Sole competent court for any dispute arising directly or indirectly from the above contract is D-78532 Tuttlingen.

All contractual business is regulated by German law, not regarding the United Nations Agreement concerning international sales (CISG).

11. Validity of the contract

Even in case of legal invalidity of individual items, the remaining parts of the contract remain binding save where adherence to the contract would mean an undue hardship on one of the parties.

12. Alterations

WERMA reserves the right to alter its products to the end of technical improvement.

WERMA Tax Number 21083/05258

General Information

Category "Technical Information"

General Information

Under the heading **"General Information"** you will find basic information and explanations of our products and catalogue entries. For example, definitions of the pictograms and abbreviations used in the catalogue as well as explanations of the meaning of the optical and audible signals.

Tech-Talk

Starting on page 320 you will find the heading **"Tech-Talk"**, compiled by experts for experts, providing interesting background information on selected topics related to signalling technology.

Key to Pictograms "Product Groups"

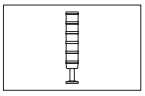
Product Group "Signal Towers"

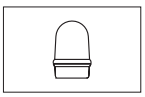
Product Group "Optical Signal Devices – Free-standing Beacons"

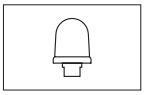
Product Group "Optical Signal Devices – Installation Beacons"

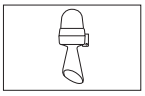
Product Group "Optical-Audible Signal Devices"

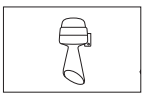
Product Group "Audible Signal Devices"



Product Group "Ex Signal Devices"

Key to Pictograms "Product Descriptions"


Protection rating according to EN 60 529. Explanation page 318

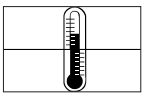
Working temperature in °C, highest and lowest rating

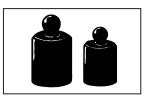
Net weight excluding packaging, in grams, ie. kgs

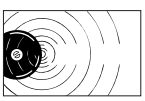
Volume in decibels (dB (A)) measured at 1m distance


Number of possible tones


Flash energy in watt seconds (Joules)

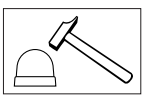
Impact resistance in Joules



Suitable for triggering via PLC

Key to Pictograms "Marks of conformity and protection types"

All WERMA products bearing the CE mark conform to current EU regulations and are tested for adherence to EMC codes.

This mark confirms that the product is suited to the intended application and conforms to the relevant standards and guidelines. In addition, the technical specifications provided by the manufacturer are certified by the TÜV.

Products with this mark have been tested and registered by UL for the North American market. This certification is also valid for Canada. The WERMA production facility is audited by UL. Products with the addendum "Class 2" may only be used in electric circuits that have been constructed in accordance with UL Class 2.

The aim of EHEDG (European Hygienic Engineering and Design Group) is to prepare and publish guidelines for hygienic engineering in the maufacturing and packaging of foodstuffs. The certification by this consortium confirms compliance with strict design criteria for avoiding weaknesses in construction and for minimising the risk of contamination.

The Frauenhofer-Institut certificate for production engineering and automisation (IPA) is a test label for products which have been qualified according to recognised standards and guidelines as to their objective suitablility for use in clean rooms.

Devices bearing this mark and number are authorised for use in hazardous areas. Ex devices guarantee a high level of resistance to extreme conditions.

Products in compliance with the AS-Interface specifications (EN 50295, IEC 62026-2) and which have been certified by the AS International Association are marked with the AS-Interface certification logo (shadowed logo).

Due to differences between the European and Russian production and testing standards, the majority of goods exported to Russia must be tested by an independent and accredited professional association in order to ensure conformity with Russian standards and requirements. Proof of conformity must be provided in the form of a GOST-R certificate.

German Lloyd sets technical, quality and safety standards for the industrial and maritime sector. In addition to the classification of ships of all types, German Lloyd is also active as a worldwide technical monitoring society.

This approval symbol documents that the product fulfills the minimum technical requirements for use on vehicles.

The VdS guidelines contain the standards which signal devices must fulfil in order to be built into intruder and fire alarm systems.

General Information

General notes on catalogue descriptions

Sound levels and frequencies
The specified sound levels are based on tests carried out in our factory. These levels are typical for the specific products and inevitably subject to variation. Mounting position and/or type can alter specifications.

The rated frequencies of buzzers are also dependent on the tolerances of the individual components and can vary up to 500 Hz from the quoted rating. No frequency rating can be stated for horns as the spectrum is so wide that any stated rating cannot be accurate. The fundamental frequency for AC devices is 100 Hz, for DC devices c. 200 - 500 Hz. This means that they emit a deeper tone than piezo devices which have values typically between 2000 and 3000 Hz.

Current consumption
The current consumption levels quoted are standard values. The ratings are based on the virtual value for AC, i.e. the average value for Dc.

The measured value is normally calculated over a period of 10 seconds. The highest current consumption rating can be considerably higher than the calculated rating.

The starting current of a product can be above the rated current by ten fold.

Assured values
The technical specifications of our products have been rigorously and thoroughly tested. A quality guarantee according to § 463 BGB is however only applicable where expressly stated.
WERMA is only liable for damage arising from the failure of guaranteed properties when the guarantee was expressly intended to protect the customer from this damage.

Measurements, weights, ratings and illustrations are subject to technical amendment.

Product descriptions

The product descriptions found in the price list and on all documents are made up of the following information:

Product type:	**Fixing:**	**Tone type:**	**Voltage:**	**Voltage type:**	**Colour:**
Electronic Buzzer LED Permanent Beacon etc.	BM = Base mounting BWM = Base/Bracket mounting EM = Installation mounting RM = Tube mounting WM = Bracket mounting	32 tones 4 tones etc. alternating cont./pulse continuous pulse	12 V 24 V 115 V 230 V etc.	AC (~) DC (⎓) AC/DC (≂)	BK = black BU = blue CL = clear GN = green GY = grey RD = red YE = yellow WH = white MC = multicolour

Examples:
Electr. Buzzer EM Continuous tone 115 V UC
LED Permanent Beacon EM 24 V DC RD

Technical Drawings, CAD Drawings and Connection Diagrams

A detailed drawing of each product can be found under the **heading "Technical Diagrams" beginning on page 266 onwards**. The technical diagrams are in the numerical order of the first three digits of the article number.

To help customers find the technical diagrams for the desired product even more quickly, we have included a reference on the relevant product page stating the page number for the corresponding diagram located in the "Technical diagrams" section.

You are welcome to request the technical diagrams in **digital form**. The relevant **3D models**, **instruction leaflets** and **connection diagrams** can be obtained from us or downloaded from our homepage at any time.

Simply select the desired product or search for it by article number, then download the file and save it locally for your further use.

Key to optical signals

Colour: Red



Meaning:
extreme danger /
hazardous conditions

Colour: Yellow



Meaning:
beware /
dangerous conditions
imminent

Colour: Green



Meaning:
normal conditions

Colour: White/Clear



Meaning:
no particular
meaning

Colour: Blue



Meaning:
conditions requiring
defined action

Key to audible signals



Multi-Tone

Description
scale in differing frequencies (various high / low frequencies) with regular, cyclical intervals

Meaning:
extreme danger /
immediate action

Two-Tone

Description
scale in differing frequencies (one high, one low frequency) with regular, cyclical intervals

Meaning:
extreme danger /
immediate action

Alternating Tone

Description
continuous tone with graduated decrease and increase of sound frequencies

Meaning:
danger / immediate action

Pulse Tone

Description
regular intervals between on and off cycle

Meaning:
danger / immediate
reaction

Continuous tone

Description
continuous tone in specific frequency

Meaning:
safety

MTTF values

"MTTF" is the abreviation for **Mean Time To Failure** and is also described as the average life cycle or **"$MTTF_d$"** (= the average time until failure leading to a dangerous situation).

The European Norm **EN ISO 13849-1** has caused a new significance to be attached to "MTTF" values, because they are used to evaluate machine safety within the conformity tests.

The MTTF is a statistical value, which is calculated by **means of testing or experience** of past values. It does not provide a guaranteed life duration or a guaranteed functional period.

MTTF values have been calculated for a variety of **WERMA products**. Please contact us for further details.

General Information

Protection ratings

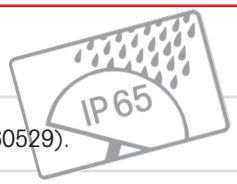

Protection ratings for signal devices: Protection ratings for housings DIN EN 60529 (DIN VDE 0470 IEC 60529).

First digit:
degree of protection against contact with dangerous parts and the intrusion of foreign particles.

IP 0X no protection

IP 1X protection against contact with the back of the hand.

IP 2X protection against finger contact with live or moving parts in the appliance. The test finger with Ø 12 mm and 80 mm length must not come into contact with dangerous parts. A ball of 12.5 mm diameter should not be able to fully penetrate the housing.

IP 3X test bar Ø 2.5 mm may not penetrate the housing.

IP 4X a wire with Ø 1 mm may not penetrate the housing.

IP 5X complete protection against dust cannot be guaranteed, but dust is not able to accumulate in such a way as to impair the operation of the device.

IP 6X total protection against dust (no penetration).

Second digit:
degree of protection against water.

IP X0 no protection

IP X1 protection against vertically falling water drops.

IP X2 protection against water drops so long as the device is tilted to an angle of 15°.

IP X3 protection against water spraying at any angle up to 60° to the vertical.

IP X4 protection against water spraying at any angle.

IP X5 protection against jets of water directed from any angle at the appliance.

IP X6 protection against heavy seas. A strong jet of water may not harm the appliance.

IP X7 protection against occasional immersion.

IP X8 protection against permanent immersion.

IP X9k protection against water during high pressure / steam cleaning.

Comparison between NEMA and IEC protection ratings – classification

NEMA Protection Type Number	Protection	IEC Protection Classification Designation
1	Falling dirt	IP 10
2	Dripping water and falling dirt	IP 11
3	Wind blown dust, rain and hail;	
	no damage due to external ice formation	IP 54
3 R	Rain and hail; no damage due to external ice formation	IP 14
3 S	Wind blown dust, rain and hail;	
	can be operated even with external ice formation	IP 54
4	Wind blown dust, rain, splashes and a direct jet of water;	
	no damage due to external ice formation	IP 56
4 X	Wind blown dust, rain, splashes and a direct jet of water;	
	no damage due to external ice formation, corrosion protection	
5	Dust, falling dirt, dripping non-corrosive liquids	IP 52
6	Direct jet of water, temporary submersion;	
	no damage due to external ice formation	IP 67
6 P	Direct jet of water, longer periods of submersion;	
	no damage due to external ice formation	IP 67
12 and 12 K	Circulating dust, falling dirt, dripping non-corrosive liquids	IP 52
13	Dust, splashes of water, oil, non-corrosive liquids	IP 54

Cannot be used to convert IEC Classification Designations to NEMA Type Numbers.
Note: This comparison is based on tests specified in IEC Publication 60529.

AS-Interface

AS-Interface, the Actuator Sensor Interface and its distinctive 'yellow cable' is one of the most innovative networking solutions in modern automation technology.

Conceived in 1990 as a cost-efficient, feature-rich alternative to conventional hard-wiring, AS-Interface has now been proven in hundreds of thousands of products and applications spanning the entire automation spectrum.

AS-Interface offers many of the benefits of more powerful and expensive fieldbuses, but at much lower cost and at much simpler application. The complete network is controlled automatically by a 'master' which polls the network sending and receiving data from each connected device in turn. It automatically senses and registers any connected devices, thus neither configuration nor application-specific software for the master is necessary.

Unique technology

Due to the cable structure, AS-Interface offers a unique mounting technology. Without any cutting or removal of insulation, sharp pins penetrate the cable insulation making the electrical contact as the connection elements are closed. This technology ensures protection up to IP 65.

Cost savings

In general, applications from as few as ten sensors and actuators to very large systems can benefit, especially when the whole life cost advantages are taken into account. Distributing the input and output functionality is one starting point for cost savings, enabling point to point wiring systems to be reduced to a single cable, eliminating or reducing cable trees, service cabinets and multiple connectors. The special AS-Interface connection technology replaces labour-intensive wiring. The tree structure permits better optimised system design and improved layouts, bringing easier installation and maintenance. Network configuration is eliminated.

System Survey

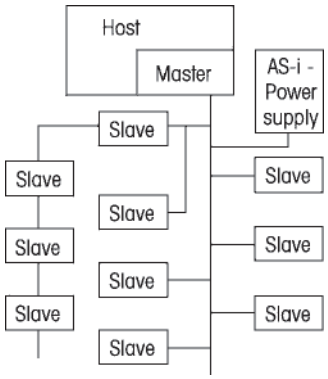

- Single master-slave principle
- Up to 62 slaves with one master
- Per slave up to 4 digital inputs + 4 digital outputs
- Max. 248 digital inputs and outputs
- Additional 4 parameter bits/salve
- Also possible: analogue I/O
- Electronic addressing of slaves
- Free structure of the network

How AS-Interface® works

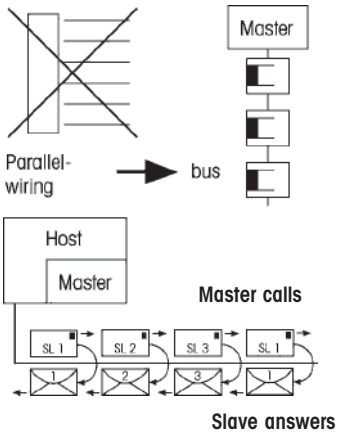

- AS-Interface® – a bus system, which subsitutes parallel wired installation from pic to sensors and actuators
- Data and energy in the same cable
- 1 Master and max. 62 slaves
- Total cycle time < 10 ms – with max. number of 32 slaves
- Master-slave principle: The master calls and the slave answers immediately

Cable power

The yellow cable can carry up to 8 A, which means that no additional wiring is required in typical installations. Several hundred mA may be drawn by a single slave device on the network. Where higher power is needed, or for emergency stop situations, a black secondary DC or AC power cable offers complementary advantages. If round cable is preferred, a wide variety of screw and push-fit termination modules offer this, with no performance compromise.

Products with AS-Interface

WERMA Signaltechnik GmbH & Co. KG has been a member of the AS – Interface® Association since 1996.



WERMA's product range encompasses the LED/Buzzer Combination 450 with acknowledgement function for AS-Interface®. The combination unites a very bright light signal with the powerful sound of a buzzer. By gently pressing the front surface of the product the audible signal can be turned off in a matter of seconds. This acknowledgement signal is fed back to the master via the AS-Interface Bus.



In addition, the new LED Installation Beacon (Multicolour) 239 is available for AS-Interface®. This is suitable for the extended addressing (A/B engineering) of up to 62 modules. This beacon is provided with electricity via the bus.



WERMA's product range also contains products with AS-Interface® for Kombi*SIGN* 50, 70 and 71 as well as customised developments. The entire BUS electronic system is integrated in the element placed at the base of the signal tower. The Kombi*SIGN* AS-Interface® elements offer the customer beneficial features such as an addressing socket and status LEDs. A user-friendly sliding switch inside the module can be used to provide the power supply required for the signal towers from an external 24 V auxiliary voltage or via the integrated bus bypass.

Tech-Talk
By Experts
for Experts

WIN – Wireless Information Network



WIN enables centralised monitoring of a diverse range of machines (e.g. injection moulding, pick and place component assembly or entire automated assembly lines)

Benefit from a complete overview with WIN – The simple way to increase machine productivity and save costs

Do you want a simple Machine Data Collection system (MDC system) without expensive investment and wiring costs?

WERMA has the ideal solution for you:
With WIN, the "Wireless Information Network", from WERMA Signaltechnik you can:

- monitor your machines
- react quickly and safely in the event of malfunctions
- save costs
- improve the productivity and efficiency of your machines

Centralised machine monitoring without additional wiring

WERMA Signaltechnik now provides a simple solution for the remote wireless monitoring of machinery. The "Wireless Information Network", "WIN" for short, is a simple MDC system, enabling you to **centrally monitor and evaluate the performance of up to fifty machines** of varying ages and functions via wireless technology. Even machines which were not previously network-capable can now be integrated into networks.

WIN can be easily installed via "plug & play". This straightforward installation process lets you centrally monitor your machines – whether **temporarily** or **permanently.** No **additional wiring** is needed as your existing WERMA signal towers can be used and the signals are transmitted via wireless technology.



The all inclusive kit: "WIN complete" for Kombi*SIGN* 71

With the all inclusive kit "WIN complete" you can **immediately start monitoring up to three machines.** All you have to do is mount the signal towers from the kit onto your machines. After installing the supplied software on to your PC you can immediately start monitoring the status of your machines.

Each of the three **pre-configured Kombi*SIGN* 71 signal towers** has three LED permanent lights in red, yellow and green, as well as a WIN slave and a base with integrated tube for mounting. "WIN complete" can be **expanded to up to fifty slaves** per network as and when required.

The kit also contains a **WIN master**, a USB cable and PC software. The master, which is equipped with a small antenna, is positioned on the wall or next to the PC and **connected via USB cable.**

You will find further technical information together with the order data on page 24.



WERMA SIGNALTECHNIK

More choice with “WIN system” for Kombi*SIGN* 70 and 71

With “WIN system” the user has even more choice: The kit consists of a **WIN master** including the software, a USB cable and **three pre-configured WIN slaves.**

The slaves are fitted to the **existing WERMA signal towers** which need to be monitored. Or you can order your own signal towers from WERMA’s wide range of Kombi*SIGN* products - enabling you to combine audible elements, different light effects, colours and mounting options as required.

The WIN system allows up to four machine states per machine to be monitored and can also be expanded to **up to fifty slaves per network** via subsequent order.

You will find further technical information together with the order data on pages 24 + 43.



Software for monitoring and analysing the machine operating status



With the supplied software, users can wirelessly monitor machinery **on their Pc.** They can search for faults or analyse the operating status, thus raising the efficiency and productivity of their machines.

The software displays the status of the signal towers integrated into the wireless network. Users can therefore specify which machine data they monitor and evaluate.

WIN also enables machine status information to be sent by email. Users can decide who is to be informed and over which period.

Quick and easy installation

The PC software can be quickly and easily installed and guides the user through the individual steps required to set up the wireless network.

A simple **display interface** enables intuitive operation and monitoring. The status descriptions of the individual signal elements can be defined in the software as required, e.g. tier one “Machine in operation”, tier two “Retool”, tier three “Fault”. A range of different **analysis and monitoring modules** are available (e.g. failure analysis over time, downtime per machine).

Examples:

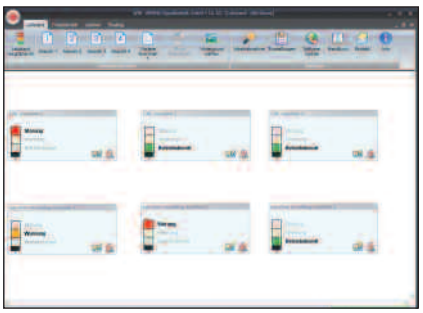

Module 1: Status indication of the networked signal towers

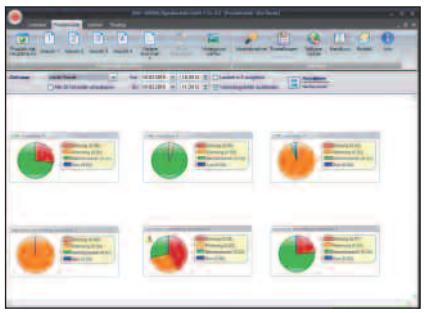

Module 2: Productivity per machine

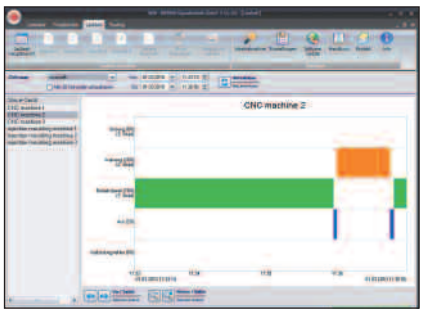

Module 3: Failure analysis over time

Tech-Talk
By Experts
for Experts

WIN – the technology

Quick installation

The WIN slave is fitted to the signal tower by **"Plug & Play"** as the lower-most element. This will not alter how your signal tower is triggered or how the individual signal elements are assigned.

The WIN slave **is powered** by the signal lines. Here, you should note that no power will be supplied when the signal lines are without power. If such cases occur, we recommend that a 24 V continuous supply be connected up to pin 5.

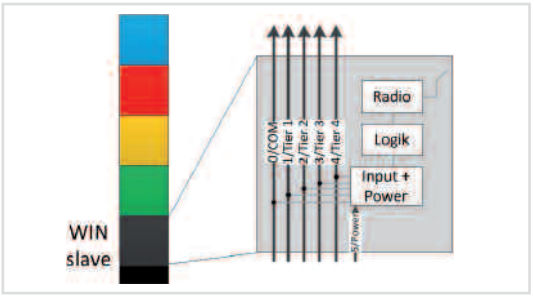

WIN slave block diagram

Intelligent "repeater" system for stable wireless connections

WIN transfers all signals wirelessly. With a clear line of sight, the **wireless signal's range** is up to 300 metres. The indoor range is less depending on the characteristics of the building.

Each slave has also been designed as a **"repeater"** to ensure stable wireless connections in buildings.The signals are then transferred to the master by the other WIN slaves, which regularly scan their environment to determine **the best transmission route** to the WIN master.

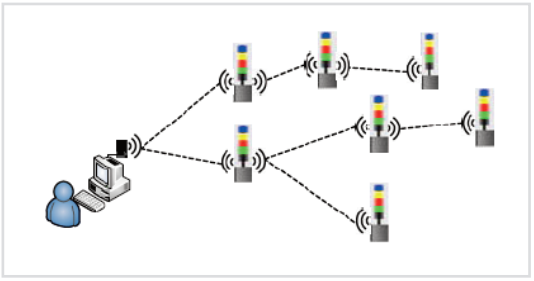

The "repeater" function makes WIN a very stable wireless system that is particularly suitable for industrial environments.

Stable radio frequency – without WLAN or Bluetooth interference

WIN uses the **868.0-868.6 MHz** frequency which offers a variety of benefits compared with conventional bands (e.g. WLAN, Bluetooth).



Interference-free radio transmission

Interference-free wireless transmission
The device meets the requirements of current regulations which allow several devices to easily use the same frequency without interfering with each other's transmissions.

Greater network range in buildings
The lower frequency of 868 MHz is better able to penetrate objects than, for instance, WLAN or Bluetooth. This means that WIN achieves a considerably greater range in buildings.

No interference with WLAN/Bluetooth
Due to the fact that WIN works on a different frequency band, it will not interfere with any existing WLAN or Bluetooth systems.

Low radio exposure
The very good frequency properties mean that WIN causes considerably less radio exposure than WLANs do for instance. The reason for this is WIN's lower transmission power (1/10 compared with standard WLAN routers) and frequency properties that are superior to those of WLAN systems.

WERMA SIGNALTECHNIK

Database records all status changes

The WIN software logs all data received from the master in an **Access database** and thus records all status changes indicated by the machine's signal tower. This allows the user to then simply process and analyse these status changes with the software's own productivity and runtime module.

Thanks to the **clearly structured** Access database, it is also possible to write your own entirely **individual queries** and **special analysis reports**. Please note, that for safety reasons, you should not write to the database but should permit "read access" only.

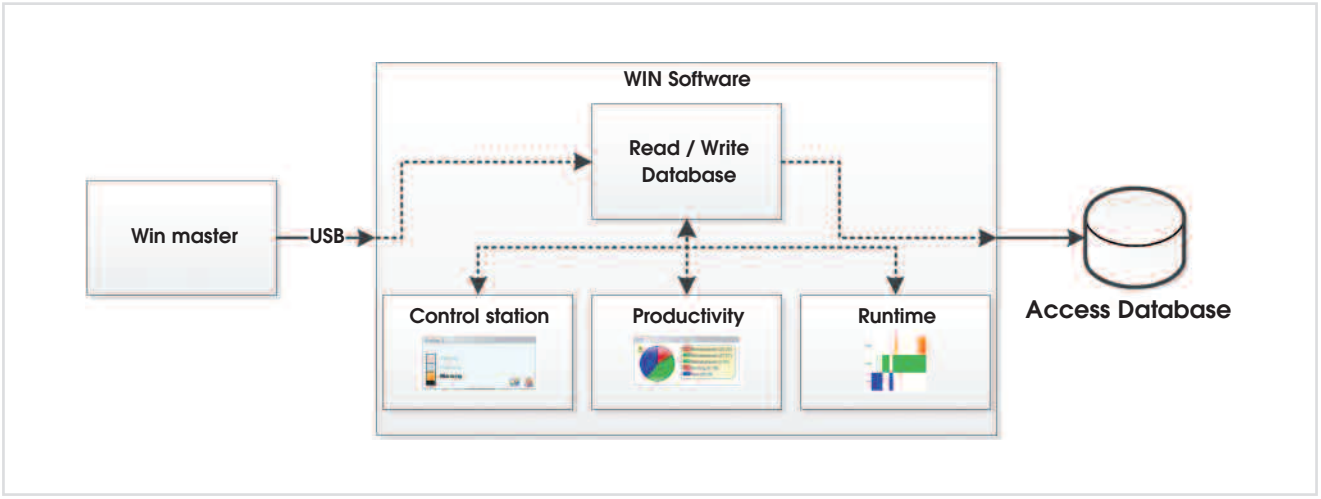

Block diagram of the WIN software with database access

Network licence included with WIN

The database software structure allows multiple access to WIN. This means that the WIN software can be used simultaneously on several PCs within the same company to access the database.

- **Multiple PC access to the WIN system**
  The system can be used simultaneously by the machine operator, team leader and division manager.
- **Network licence included**
  The supplied software comes with a network licence. This can be installed and used at different workstations within a company. No additional licence costs will be incurred.

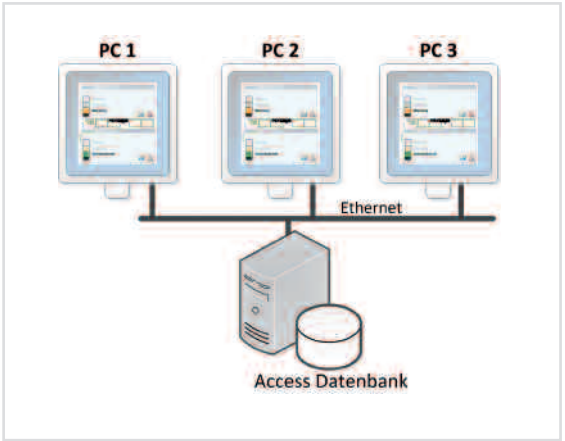

Multiple access to the WIN system from several workstations

Tech-Talk
By Experts
for Experts

Kombi*SIGN* reflect

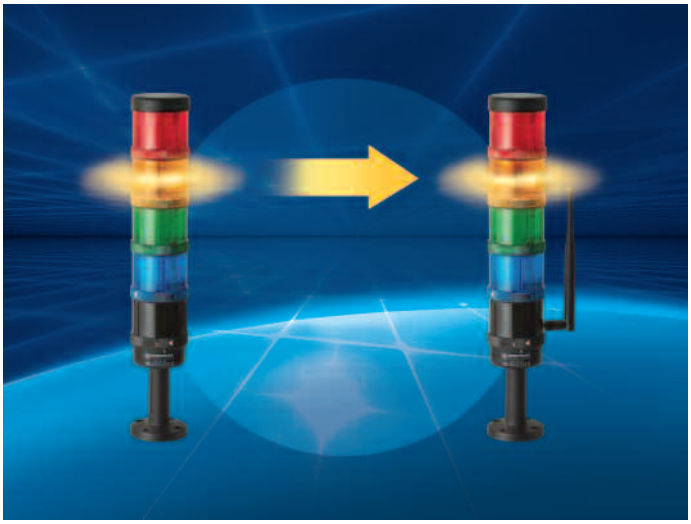

Keep an eye on your machines with Kombi*SIGN* reflect

Do you want

- to monitor machines that are out of view?
- to improve the productivity and efficiency of your machines?
- to react quickly and safely in the event of malfunctions?
- to save costs?

Then WERMA has the solution for you!

Signal tower “reflection”

WERMA Signaltechnik provides a simple solution for the remote wireless monitoring of machinery. The new **Kombi*SIGN* reflect** kit can be integrated into existing WERMA signal towers which are already installed on your machines.

Kombi*SIGN* reflect **“reflects” the status** of the machine to a signal tower within your line of sight. This enables you to **wirelessly monitor** machines situated at a greater distance and respond quickly to malfunctions. With Kombi*SIGN* reflect, even machines which were not previously network-capable can now be remotely monitored.

Kombi*SIGN* reflect is available for the WERMA Kombi*SIGN* 70 and 71 signal tower ranges. The kit consists of two elements that transmit and receive the data via wireless signal **(slave and master).**



Kombi*SIGN* reflect consists of a slave and a master

Kombi*SIGN* reflect: Simple “plug & play” integration

The two Kombi*SIGN* reflect elements are **synchronised and ready for immediate operation**. The signal towers located on the machines can simply be fitted with the Kombi*SIGN* reflect slave. A second identical signal tower, which you have previously selected from WERMA’s Kombi*SIGN* product range, is fitted with the Kombi*SIGN* reflect master and placed within view.

The status of the first tower is then immediately transmitted to the second tower, where it is **reflected one-to-one.**

The system uses the **868 MHz frequency band** and has a **transmission range of** up to **300 m** (unobstructed line of sight). The indoor range may be less depending on the characteristics of the building.

You will find further technical information together with the order data on page 44 (Kombi*SIGN* 70) and page 23 (Kombi*SIGN* 71).



Simply fit the Kombi*SIGN* reflect slave to the signal tower on the machine

WERMA SIGNALTECHNIK

LED Element „ultrabright“

Good visibility, even in direct sunlight, is a basic precondition for the reliable deployment of signal devices in outdoor areas. This is a standard feature of the signal towers and beacons from WERMA Signaltechnik. There are however applications which place even more extreme demands on the visibility of optical signalling.

Up to 20 times brighter



Thanks to its sophisticated triggering, the innovative LED element "ultrabright" is up to 20 times brighter than conventional LED beacons – making it almost certainly the **brightest permanent light** that the world of signalling technology currently has to offer.

Furthermore, the **intelligent electronics** ensure that the LEDs operate at maximum brightness, depending on the ambient and operating temperatures. The "ultrabright" LED element is therefore always working at its optimum, and the energy-saving LED technology ensures that power consumption is kept to a minimum.



Brighter than sunlight

For example, the signalling of **mobile cranes movements** on large construction sites must be clearly visible over large distances, even when the signal beacon is exposed to direct sunlight.

The new, "ultrabright" LED signal tower element for the WERMA signal towers Kombi*SIGN* 70 and 71, effortlessly meets these requirements. Its **bundled light** is brighter than the incidental sunlight, making it clearly visible.

"Ultrabright" masters the reflection of sunlight in snowy conditions

Skiers on the piste enjoy the sunlight. However, at the lift **turnstiles** sunlight reflected from the snow can be debilitating. Even in these extreme conditions, the Kombi*SIGN* "ultrabright" element wins out against the blinding sunlight, **providing a clear and unambiguous signal:** "Please enter now!"

In short: Wherever the sun or other lighting factors impede visual perception, the WERMA signal towers Kombi*SIGN* 70 and 71 triumph with their new, "ultrabright" LED element.

You will find further technical information together with the order data on page 47 (Kombi*SIGN* 70) and page 28 (Kombi*SIGN* 71).



Tech-Talk
By Experts
for Experts

EVS – Enhanced Visibility System

A groundbreaking innovation in LED technology opens up a completely new dimension in optical signalling. Enhanced Visibility System, or the electronic improvement of visibility, EVS for short, is the name WERMA has given to this latest development which promises to bring about a revolution in signal technology.

EVS – attention-grabbing neurobiological light effect



The flickering of neon lamps and comparable lighting effects are highly effective at attracting our attention. The neurobiological basis of this phenomenon is explained by a university scientist as follows: Light signals are processed in the human brain, not directly in the eye. In order to be consciously registered there, incoming stimuli first have to pass through a form of filter.

This filter has a "protective" function. During sleep it reduces disturbing stimuli to a minimum and assists in "overlooking" regular or continuous signals.

Irregular light impulses can circumvent the brain's filter function. Random light signals fail to generate an acclimatisation effect and the brain is unable to escape the stimulus, even when the flickering continues for an extended period.

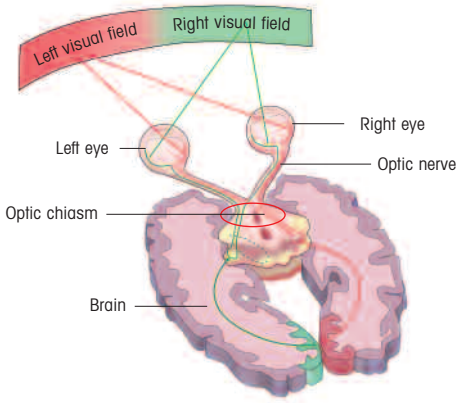

The way in which the brain processes visual stimuli formed the basis for the development of the new EVS technology

EVS – flickering light without acclimatisation

Laboratory Test Results
Level of awareness generated by different light effects

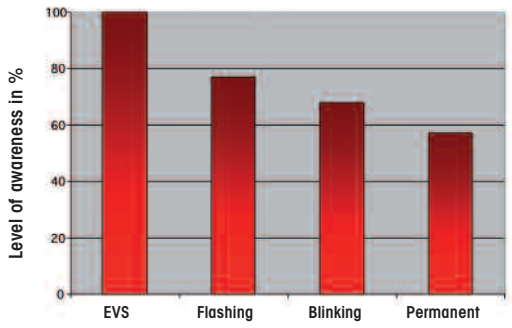

On the basis of this understanding, WERMA's R+D department set out to find a flickering light with a high degree of effectivity in attracting attention. In a multi-stage laboratory experiment test candidates were asked to judge a series of different light signals and determine the most eye-catching light.

The result of the study was a stochastic flickering light with optimal attention-grabbing characteristics: EVS – Enhanced Visibility System! The light effect of this system is completely new and distinguishes it from all previous systems.

EVS signal devices communicate highly urgent situations



As a result of the extremely powerful signal effect, the EVS light is especially suited to signalling acute or highly important conditions. The EVS element can also be deployed in hazardous situations or in areas where immediate action is required.

Integrated into Kombi*SIGN* Signal Towers, the new EVS LED Element generates a highly attention-grabbing signal (see page 48 and 29).



This innovative technology is also used in the 853, 280 and 829 series (page 137 onwards) and in the optical-audible combination 444 (page 191).

EVS – unique light effect using LED technology



For the EVS system WERMA employs light emitting diodes. A microprocessor generates random light signals.

This gives the light a very "agitated" character which proves highly effective in drawing the attention of those in its vicinity – even when seen out of the corner of the eye.

Up to now LED signal devices have confined themselves to imitating the light effects of light bulbs or xenon flashes, EVS however utilises the strengths of light emitting diodes. LEDs are capable of generating the required high flickering frequency with ease - frequencies which xenon flashes are for example incapable of generating.

There are a series of additional, classical advantages to LEDs – their resistance to vibration and shocks, their long life duration as well as their low energy consumption.

Typical 2 second section of an EVS LED element's illumination sequence

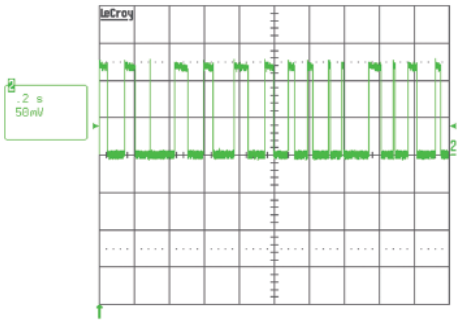

Tech-Talk
By Experts
for Experts

Light in Signalling technology

Optical Signals in everyday life

The field of signalling technology offers us not only the possibility of audible signals, but also that of optical signals. These are to be found everywhere in everyday life; at traffic lights, in alarm systems or where obstructions arise. Countless uses can also be found in the industrial sector, above all in the signalisation of a machine operating status.



The generation of light – a summary of the possibilities

Light can be generated in various ways. Signalling technology mostly uses bulbs, halogen bulbs, electric discharge tubes and LEDs.



Bulbs

A tungsten filament is heated up to a high temperature, so radiating energy over a wide wavelength. This is perceived as light similar to sunlight. The tungsten filament evaporates with time. When the tungsten content falls below a certain level, the maximum life duration of the bulb is reached. As tungsten oxidises quickly and is destroyed when it comes into contact with air, the filament must be kept in a non-oxidising atmosphere such as vacuum. This leads us to the familiar light bulb with its sealed glass body.



Halogen bulbs

These are bulbs wherein the tungsten filament is enclosed by a small amount of halogen. The resulting chemical reaction has the effect of lengthening the life of the tungsten and stabilising the light output throughout the entire life duration of the bulb.

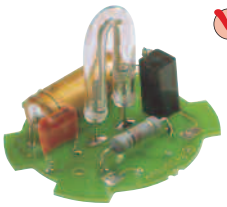

Electric discharge tubes

Xenon flash tubes are widely used in signalling technology. They consist of a glass tube filled with the inert gas xenon. A sufficiently high voltage leads to a discharge of energy with a spark gap and a flash of high intensity.

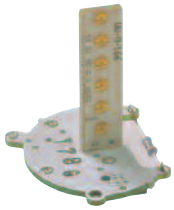

LED

Light emitting diodes are constructed using certain semiconductors. Foreign atoms are built into the semiconductor with the purpose of optimising the conductibility. Half of the semiconductor (n-region) is doped with foreign atoms that contain one bonding electron more than the semiconductor atom. This surplus atom can move freely and increases conductibility. The other half (p-region) is doped with foreign atoms containing one electron less than the semiconductor. When the LED is switched on, these faults ("holes") fill up with free electrons (recombination). Energy in the form of radiant photons is hereby released. The energy and therefore the colour of the light emitted is determined by the material the semiconductor is made of; e.g. GaAsP (Gallium Arsenic Phosphide) results in red light.

LED – Beacons with many advantages



LEDs offer many advantages when compared with conventional light bulbs:

- Minute dimensions
- Low current consumption
- Low heat generation
- Extremely high life duration of up to 50,000 hours
- All major colours can be realised
- Vibration and shock resistance
- Immediate illumination

Fundamental units of light magnitude

The fields of lighting and signalling technology differentiate between fundamental units to define light itself. The most important of these are the units Lumen, Candela and Lux.

Lumen (unit lm)

Light current is measured in Lumen; this is the unit for the entire visible light output of a light-emitting source. The light current is defined by the following formula known as the brightness characteristic:

Light current ϕ [in *lm*] = radiation capacity x brightness characteristic V(λ)

The brightness impression upon the human eye is based on a sensitivity curve V(λ) which reproduces the sensation felt by the eye in relation to the wavelength. The maximum point on this curve is at about 555 nm; we see best at this wavelength; V(555 nm) = 1.

Candela (unit cd)

In signalling technology only the part of the light current that is emitted in a certain direction is of importance. This light intensity is measured in Candela. It is defined by the light current of a lamp and the steradian measure $\frac{1}{4\pi\ \mathrm{sr}}$.

$$\text{Light intensity [in } cd\text{]} = \frac{\text{Light current } \phi}{\text{Steradian measure } \Omega}$$

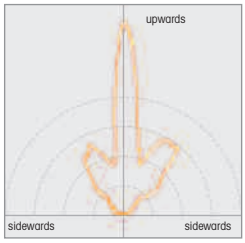

A complete sphere has a dihedral angle of $\Omega = 4\ \pi$ sr. sr stands for the steradian and is the unit for the dihedral angle.



Example: a household candle emitting a light intensity of 12,566 Lumen has a light intensity in relation to the steridian measure $\frac{12{,}566\ \mathrm{lm}}{4\pi\ \mathrm{sr}} \approx 1\mathrm{cd}$.
This explains the name: candela is the Latin word for candle.

Lux (unit lx)

Illumination density is an important unit in lighting installations. It is the measure of the brightness with which an area is illuminated. Whereas light intensity (in cd) is a property of a light source, illumination density is calculated in regard to the area to be illuminated.
Where the light current emitted is constant, the following formula is applicable:

$$\text{Light density E [in lux]} = \frac{\text{Light current } \phi}{\text{Surface A}}$$

Tech-Talk
By Experts
for Experts

Light in Signalling technology

Types of optical signal devices

We differentiate between permanent, blinking and flashing beacons as well as beacons with rotating light. The appropriate signal type must be chosen to meet the needs of the specific application, whether as a warning, an informative signal or a simple piece of information.

Signalling technology relies mainly on the colours green, red, yellow, blue and clear.

The following diagram shows the position of these colours in the spectrum:

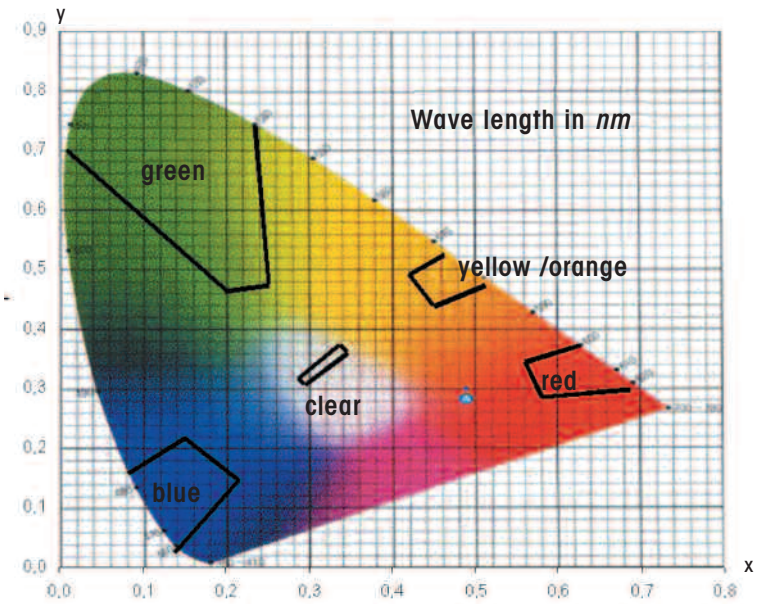

Experience and Know-How – the right combination

WERMA can look back on many years of experience and in-depth knowledge in the field of optical signals. Our technicians have been researching the fundamental principles of light effusion for many years, and the fruits of their work flow into the conception and development of all new products.

Our guiding principle has always been to implement and realise the newest trends in technology. To achieve this goal we employ a large and competent team of R + D engineers and invest in the most modern testing facilities.

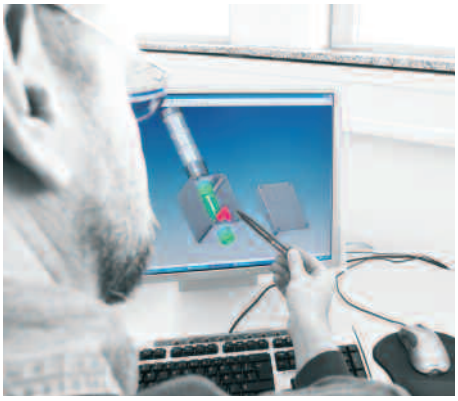

It is WERMA's declared goal to market only truly innovative products; with this in mind, we invest about 11% of overall expenditure in the development of new products, a strategy which will enable WERMA to carry on setting the standards in the field of optical signalling.

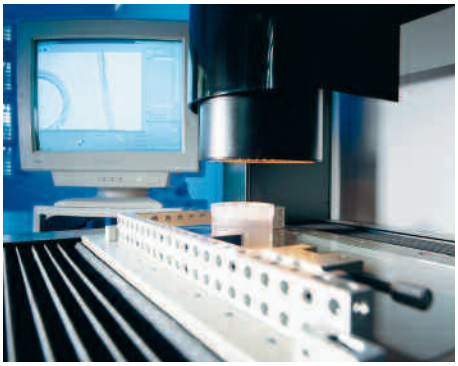

Research and development as the basis for innovation

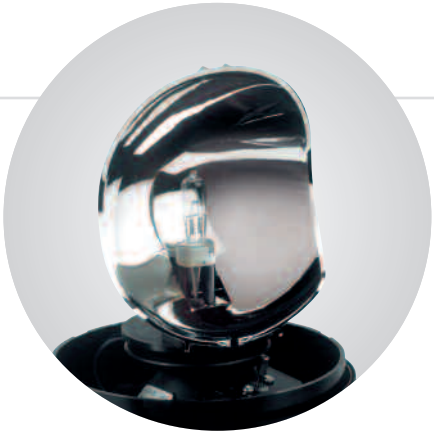

The different types of optical signal devices call for an individually suited transparent housing, known as a lens.

The lens of a flashing beacon has, for example, an especially designed ribbing. The light is dispersed in such a way as if the whole lens is flashing. The lens of a rotating mirror beacon is by contrast a consistent thickness. The rotating light signal is not scattered here, but bundled to a point. The precise setting of the rotating mirror is of great importance, as the aim is to attain the greatest possible bundling of light.

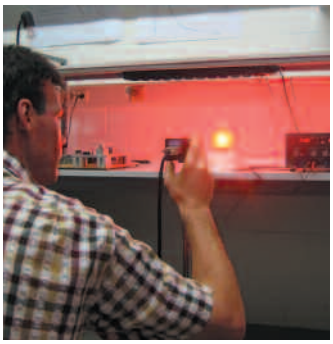

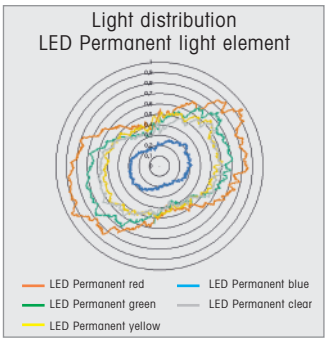

WERMA is able to make exact calculations regarding the positioning of the path of rays. The optical laboratory can measure all relevant units of light. Even the brightness curve of a flash can be analysed in nanoseconds.

Reliable LED technology

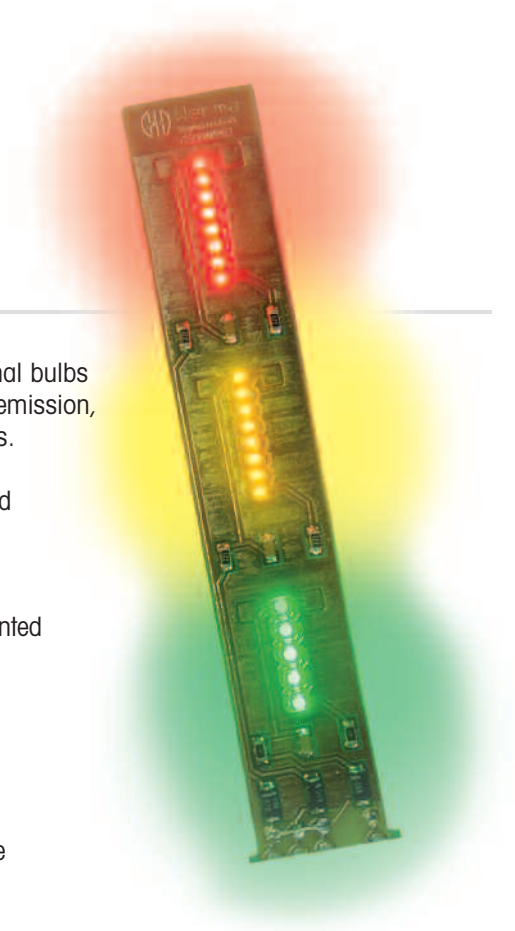

WERMA is a market leader in the use of LED technology parallel to conventional bulbs and halogen bulbs. The advantages are obvious: high life duration, low heat emission, and low current consumption. Even flashing light can be produced using LEDs.

WERMA uses different types of LEDs in its optical signal devices: Chip-on-Board (COB), SMD, and wired LEDs (e.g. Super-Flux).

- With the **COB method**, single LED chips are bonded onto a gold-plated printed circuit board.
- With **SMD LEDs** the chip itself is already encased in a housing and is set onto the printed circuit board with the other components on WERMA's own assembly line.
- **Super-Flux** models are characterised by their extreme light intensity and are used whenever a signal must be particularly bright.

Tech-Talk
By Experts
for Experts

Acoustics in Signalling technology

Audible signals are everywhere!

Audible signals warn, protect and guide us in the modern industrial world. They function where caution, prudence and clarity are imperative, indicate emergencies and demand direct action. They are globally understood, irrespective of language, written or spoken.



Audible signals are deployed where an optical signal is insufficient or inappropriate. A wide range of products belong to this essential group of audible signal devices: The car horn, indispensable for driving in traffic, the buzzer of an egg timer, the school bell signalling break times and the siren on emergency vehicles.



Audible devices also enjoy a wide range of applications in industrial environments where they are deployed to indicate malfunctions or to provide a warning in dangerous situations. The basic signal is provided by one or more tones or a sequence of tones, and is to raise awareness and alert to a specific danger.

Types of audible signals



WERMA provides a wide range of audible signal devices for the most diverse fields of use:

- Sirens and multi-tone sirens
- Buzzers and installation buzzers
- Signal horns
- Three-tone gongs
- Alarm bells





Double safety with optical-audible signals

Under certain conditions, operational sites with a high or changing noise level require a coloured, optical stimulus in addition to the audible signal.

The combination of optical and audible signals leads to greater effectivity as both the eyes and ears are addressed by the sensory stimuli. The combination of an optical and an audible signal rules out the possibility of mistakes or the audible signal being overheard.





Types of sound generation used in signal technology

Electromechanical sound generation

Electromechanical signal horns from WERMA work according to the oscillating armature principle. This can also be described as a special form of Wagner's interrupter, whereby an electromagnetic oscillation generator produces mechanical oscillations.



The oscillation generator is composed of a solid iron core with a field coil and a moving armature that is held at rest by a plate spring (membrane). When an electric current passes through the field coil, the armature is pulled i.e. pushed from its resting position. If the amperage or the direction of the current changes continually, the armature oscillates. This is achieved by means of an alternating current or an appropriately prepared direct current. The mechanical adjustment is such that the armature strikes the iron core, leading to a considerable amplification of the principle audible vibrations (structure-borne noise).

As opposed to the classical Wagner's interrupter where the oscillating element simultaneously controls the current flow (interrupter), producing considerable radio interference voltages, the oscillating armature operating with an alternating current does not produce any interference voltages. When operating with a constant current the suppressors can be integrated into the required driving circuits.

As a result of this operating principle such systems are resistant to extreme temperatures and humidity. The life duration is solely determined by the mechanical wear and tear of the parts.

Loudspeakers (electro-dynamic sound generation)

A loudspeaker converts an alternating electric current into sound waves. This occurs by means of the interaction between the electric current and a permanent magnet. The coil is positioned within the magnetic field of the permanent magnet. When an electric current is applied to the coil, the Lorentz force generated leads to a deflection of the coil, causing the membrane to vibrate.



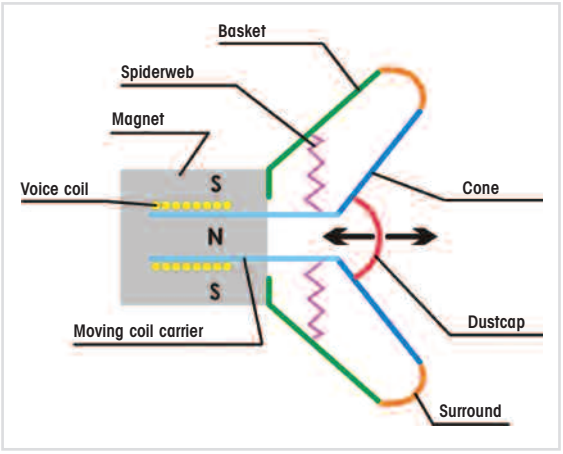

As a result of the centering spider this proceeds in an up and down motion. It centres the coil and, together with the bead, ensures that it returns to the resting position.

With the use of the appropriate size of membrane and material, as well as different drives (coils and permanent magnets), loudspeakers can be optimised for a variety of different frequency ranges.

Tech-Talk
By Experts
for Experts

Acoustics in Signalling technology

Acoustic capsule (electromagnetic sound generation)

The acoustic capsule belongs to the group of electromagnetic sound generators. This principle was previously used for telephone earpieces. Within the capsule a permanent magnet serves to pre-magnetise the armature which is connected to the membrane. This is made to oscillate and these oscillations are then converted into audible tones. The acoustic capsule is characterized by a relatively simple construction and a compact form and displays a high degree of effectivity.





Piezo disc

Piezoelectricity (also known as the piezoelectric effect, or for short: piezo effect) refers to the interaction of mechanical pressure (Greek piezein = to press) and electrical currents in solid bodies. It describes the phenomenon whereby the deformation of certain materials leads to the generation of an electric charge at the surface (direct piezoelectric effect).

In a reverse process these materials (predominately crystals) deform when a voltage is applied. The deflection is relatively small so they need to be transmitted to a membrane, from where the oscillations excite air molecules which are then perceived as sound.

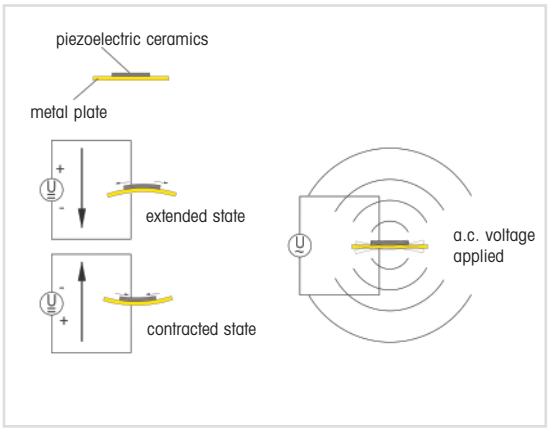

Audibility factor of audible signals devices

One of the most important properties of audible signals is their sound output and therefore their audibility factor. The signal must be able to be heard without disturbing those around it.



The audibility of an audible signal is dependent on a number of different factors:

- the sound output of the signal (in dB)
- the tone frequency (in Hz)
- the distance between signal device and recipient
- the noise level of the surrounding area
- other influences (for example air humidity, wind direction)

WERMA SIGNALTECHNIK

Principle acoustic parameters

Sound output level

The sound output level L_p refers to the logarithmic relationship of the square of the sound output of an acoustic event to the square of the reference value p_0 = 20 µP. The result is given in decibels (abbreviation dB).

$$L_p = 10 \log_{10}\left(\frac{p_1^2}{p_0^2}\right) \text{dB} = 20 \log_{10}\left(\frac{p_1}{p_0}\right) \text{dB}$$



When indicating an absolute level (with reference to the standardized reference level p_0 the abbreviation "SPL" (sound pressure level) is added.

With intermediate to high levels and frequencies a sound output difference of 10 dB is heard as approximately twice as loud. Differences of 3 dB are clearly audible. The perceived sound level is not just dependent on the sound output level, but also on the spectrum of the sound signal and its temporal progression. Single tones are perceived as being considerably louder than a broadband audible signal with the same sound output level. Audible signals with sharply changing levels are also perceived as being significantly louder than uniform audible signals with the same average level.

Weighting curves (A, B and C according to DIN EN 61672-1, formerly IEC/DIN 651) are the curves from weighting filters that are applied to the sound output signal. They are designed to reproduce a similar frequency response as that of the human ear for a specific sound level. However they are only able to achieve a rough approximation, the values obtained for the weighted sound output measurements do not exactly match those of the human ear.

Weighting levels are indicated by the corresponding letter of the frequency weighting, e.g. a C weighting sound output level is given in dB (C). In the field of technical acoustics the A weighting level is predominately employed. For this reason WERMA specifies levels in dB (A).

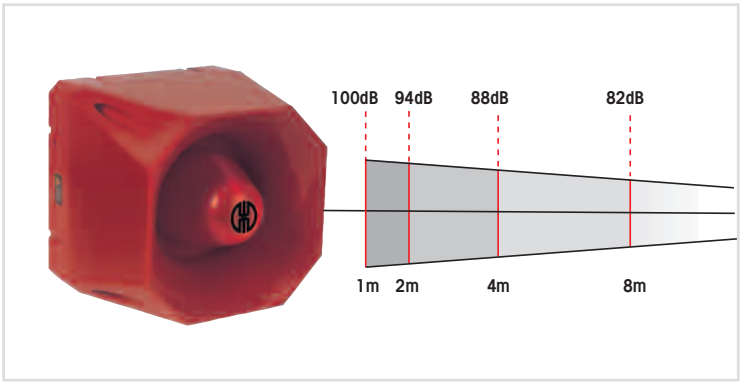

The sound output level is always dependent on the distance from the source of the sound. WERMA specifications are always based on a measuring distance of 1 m, unless otherwise stated.

In the case of point sound sources (generally applies for all sources radiating equally in all directions), the sound output level decreases by **6 dB with each doubling of the distance from the source**.

Acoustics in Signalling technology

Table of working range

Sound pressure level dB (A)	Distance in m												
	1	2	3	5	10	20	30	50	100	200	300	500	1000
	120	114	110	106	100	94	90	86	80	74	70	66	60
	118	112	108	104	98	92	88	84	78	72	68	64	58
	116	110	106	102	96	90	86	82	76	70	66	62	56
	114	108	104	100	94	88	84	80	74	68	64	60	54
	112	106	102	98	92	86	82	78	72	66	62	58	52
	110	104	100	96	90	84	80	76	70	64	60	56	50
	108	102	98	94	88	82	78	74	68	62	58	54	48
	106	100	96	92	86	80	76	72	66	60	56	52	46
	104	98	94	90	84	78	74	70	64	58	54	50	44
	102	96	92	88	82	76	72	68	62	56	52	48	42
	100	94	90	86	80	74	70	66	60	54	50	46	40
	98	92	88	84	78	72	68	64	58	52	48	44	38
	96	90	86	82	76	70	66	62	56	50	46	42	
	94	88	84	80	74	68	64	60	54	48	44	40	
	92	86	82	78	72	66	62	58	52	46	42	38	
	90	84	80	76	70	64	60	56	50	44	40		
	85	79	75	71	65	59	55	51	45	39			
	80	74	70	66	60	54	50	46	40				
	75	69	65	61	55	49	45	41					
	70	64	60	56	50	44	40	36					
	65	59	55	51	45	39	35						

Examples of noise in everyday life

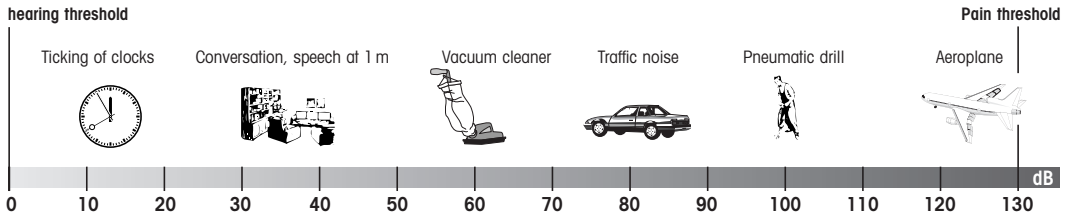

Tone frequency

Sound is a series of fluctuations in the air pressure at different amplitudes occurring at a specific rate per unit of time. This rate is termed frequency and is measured in the unit 1/s = 1Hz (Hertz). It is named after the German physicist Heinrich Rudolf Hertz. A tone is generated by an oscillation at a certain frequency. The musical tone A for example, has a frequency of 440 Hz. Noise is the term used to describe a number of overlapping tones.

The human ear is only capable of hearing tones within a certain frequency range. In the case of children this range is between 20 and 20,000 Hz. This sensitivity declines with increasing age: by the age of 50 the limit is approximately 12,000 Hz, and with advanced age this is often as low as 5,000 Hz.

The human ear hears tones of different frequencies at different relative strengths. The limit of audibility and the pain threshold are therefore dependent on the respective frequency. For this reason audible signal devices generally operate at a frequency between 500 and 3,000 Hz.

Environmental factors

In addition to the sound output level, the tone frequency and the distance to the signal device, environmental factors are also decisive for the quality of the signal. Wind, humidity or even rain all have an effect on audibility. A very important factor is the ambient noise level.

In industrial environments in particular, the ambient noise level produced by machines is often very high. Accordingly, the signal devices must produce a sufficiently high sound output in order to be heard.



WERMA has developed loud signal horns and sirens for this purpose. With fluctuating ambient noise levels, the use of a siren with a self-adjusting sound level is recommended – a patented invention from WERMA.

Research and development at WERMA

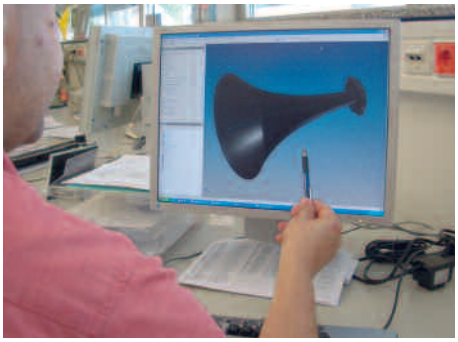

For over 50 years WERMA has been developing audible signal devices of the highest quality. Year after year we invest in research and development, enabling us to offer our customers innovative products employing state of the art technology.



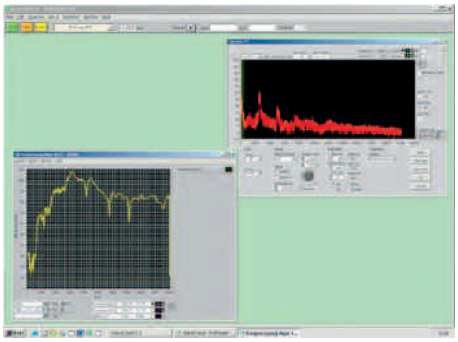

Today our development team has a number of acoustic specialists in its ranks, equipped with the latest laboratory and test equipment.

WERMA places great importance on acoustic measuring technology and life duration testing facilities. Our products are only brought onto the market after they have passed the toughest of product tests.

The optimal sound generation and diffusion is achieved by means of extensive calculations, simulations and subsequent tests. For example, the horn dimensions of an audible signal device are precisely tailored to the required frequency.

Product number index

Product no.	Page
107	204
109	205
114	207
118	208
118 483	211
119	208
119 483	211
123	214
126	215
127	212
128	213
129	218
133	216
134	217
139	222
140	220
141	223
142	224
144	226
150	196
170	238
172	237
190	228
200	106
201	107
202	131
203	106
204	107
205	131
206	89
207	90
208	98
209	108
210	110
211	111
212	133
213	110
214	111

Product no.	Page
215	133
216	91
219	112
220	116
221	117
222	135
223	116
224	117
225	135
230	84
230 Economy	85
231	86
231 Economy	87
232	97
239	88
280 LED Permanent	127
280 LED Double Flash	146
280 LED EVS	147
280 LED LED Obstruction Light	129
280 LED Rotating Beacon	154
281	130
338	209
382	210
420	174
421	176
422	178
423	180
424	182
425	183
439	186
441	187
442	188
444	190
450 with acknowledgement function	197
450 for AS-Interface	198
480	184
482	232
494	193

Product no.	Page
570	234
571	235
572	235
573	236
580	185
581	185
582	233
584	230
585	231
640	18
640 EVS	29
640 colour coated	33
640 USB	32
644 ultrabright	28
645 Vocal element	30
645 Self-Adjusting	31
646 AS-Interface Element	27
646 GSM Transmitter Element	26
691 Flat*SIGN*	68
691 Flat*SIGN* Design Highlights	71
693	63
693 silver finish	63
694 de*SIGN*	67
695	78
695 Clean*SIGN*	76
697	64
697 USB Interface	64
714	261
718	260
720	259
738	258
740	250
741	251
750	262
761	263
770	252
771	253
782 LED Permanent	254

WERMA SIGNALTECHNIK

Product no.	Page
782 LED Rotating Mirror	256
783	255
784	257
800	92
801	93
802	99
806 monitored	118
815	94
816	95
816 USB	96
817	100
826	120
826 monitored	121
827	140
828	141
829	122
829 LED Double Flash	142
829 LED EVS	143
829 LED Permanent	153
829 monitored	124
829 with external triggering	123
830	139
835	139

Product no.	Page
838	145
839 LED Permanent	126
839 Rotating Mirror	151
839 LED Permanent	152
839 Double Flash	144
840	38
840	40
840 GSM Transmitter Element	45
840 AS-Interface Element	46
840 USB	51
840 colour coated	52
843 EVS	48
843	38
843 ultrabright	47
844	40
844 Self-Adjusting	50
645 Vocal element	49
845	55
845 AS-Interface Element	59
850	114
851	114
852	114
853 LED	119

Product no.	Page
853 LED Double Flash	136
853 LED EVS	137
860 WIN KS 71	24
860 WIN KS 70	43
861 KS 71 reflect	23
861 KS 70 reflect	44
880	157
881	158
883	156
884	155
885	148
890 LED	159
890	160
894	164
895	125
897	138
914	239
955	168
956	166
960 Interface Box	34
960 Foldaway Base KS 71	35
960 Foldaway Base KS 70	53

Our Products

If you are searching for a specific product, then our overview pages at the beginning of each product section provide additional support. All product variants for the specific product group are arranged according to their features (for example light effect or sound output).

Signal Towers



Page 10 onwards

Installation Beacons



Page 80 onwards

Free-standing Beacons



Page 102 onwards

Optical-Audible Signal Devices



Page 170 onwards

Audible Signal Devices



Page 200 onwards

Ex Signal Devices



Page 240 onwards



WERMA
SIGNALTECHNIK

WERMA SIGNALTECHNIK GMBH + CO. KG
Dürbheimer Straße 15
D-78604 Rietheim-Weilheim
Fon +49 (0) 74 24 95 57-0
Fax +49 (0) 74 24 95 57-44
www.werma.com • info@werma.com

11/10 • 991 111 02 • E