

Part no. M30C-FL-Y
Article no. 183285
Catalog No. M30I-FL-Y

Powering Business Worldwide

Delivery program

Product range			RMQ-Titan
Basic function			Indicator lights
Single unit/Complete unit			Single unit
Design			Flat
Colour			
Lens			yellow
Lens			
Degree of Protection			IP67, IP69K
Connection to SmartWire-DT			Yes, with SWD-RMQ connections
Actuator travel and actuation force as per DIN EN 60947-5-1, K.5.4.1			
Minimum force for positive opening	N		0
Front dimensions			Ø 36 mm

Technical data

General

Standards			IEC/EN 60947 VDE 0660
Climatic proofing			Damp heat, constant, to IEC 60068-2-78 Damp heat, cyclic, to IEC 60068-2-30
Ambient temperature			
Open		°C	-25 - +70
Mounting position			As required
Mechanical shock resistance		g	not planned
Terminal capacities		mm^2	
Solid		mm^2	0.5 - 1.5
Stranded		mm^2	0.5 - 1.5

Contacts

Rated impulse withstand voltage	U_{imp}	V AC	4000
Rated insulation voltage	U_i	V	250
Overvoltage category/pollution degree			III/3

Design verification as per IEC/EN 61439

Technical data for design verification			
Operating ambient temperature min.		°C	-25
Operating ambient temperature max.		°C	70

Technical data ETIM 6.0

Low-voltage industrial components (EG000017) / Front element for indicator light (EC000223)

Electric engineering, automation, process control engineering / Low-voltage switch technology / Command and alarm device / Front element for warning lights (ecl@ss8.1-27-37-12-11 [AKF029011])

Suitable for number of built-in signal lights			1
Colour lens			Yellow
Construction type lens			Round

Hole diameter		mm	30
Width opening		mm	0
Height meter opening		mm	0
With front ring			Yes
Material front ring			Metal
Colour front ring			Chrome
Type of lens			Flat
Degree of protection (IP), front side			IP67

Dimensions

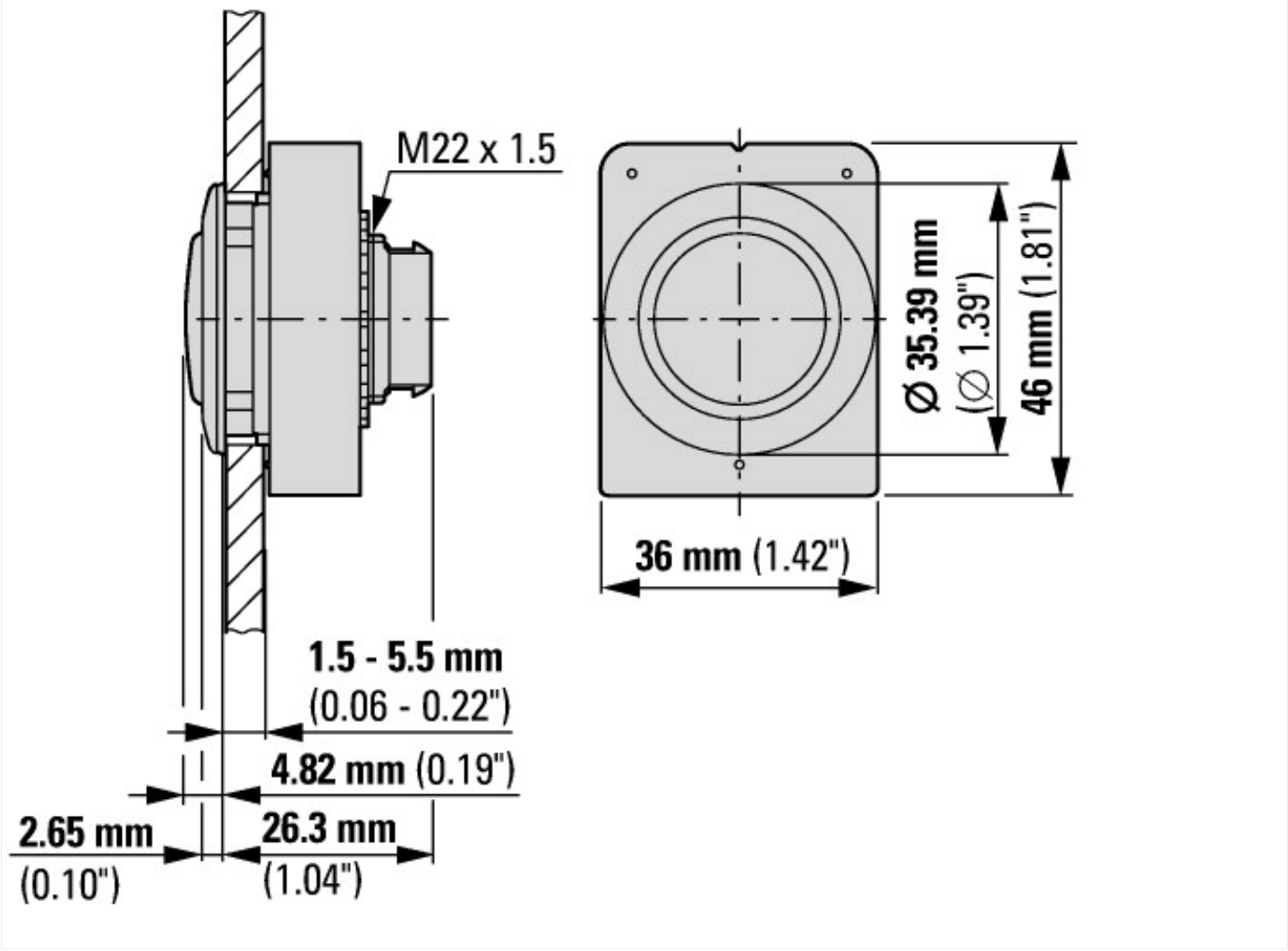

© 11/2016 by Eaton Industries GmbH