Product data sheet
Characteristics

ZBSP2
Rigid transparent protection cover with IP65 and IP67



Main

Range of product	Harmony XB5
Sale per indivisible quantity	1

Complementary

Thickness	1.5...5 mm
Product or component type	Rigid protection cover
Material	Plastic
Accessory / separate part category	Protection accessories
Product compatibility	Panel mounted USB port XB5P Panel mounted RJ45 port XB5P
IP degree of protection	IP65 IEC 60529 IP67 IEC 60529
Colour	Transparent

Offer Sustainability

RoHS (date code: YYWW)	Compliant - since 1645 - Schneider Electric declaration of conformity Schneider Electric declaration of conformity
REACh	Reference not containing SVHC above the threshold Reference not containing SVHC above the threshold

Disclaimer: This documentation is not intended as a substitute for and is not to be used for determining suitability or reliability of these products for specific user applications

Dimensions

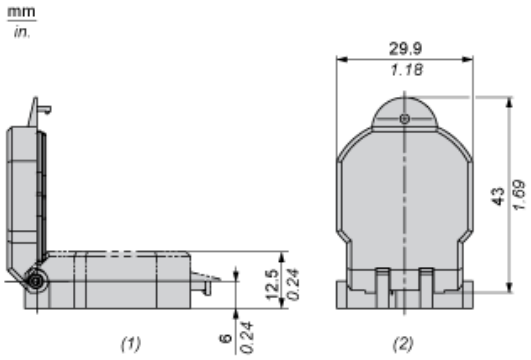

(1) Side View - Open
(2) Back View - Open

Panel Cut-out for Protective Cover (Finished Holes, Ready for Installation)

Connection by Screw Clamp Terminals or Plug-in Connectors

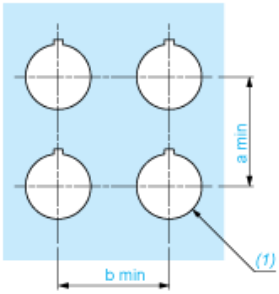

(1) Diameter on finished panel or support

Connections	a in mm	a in in.	b in mm	b in in.
By screw clamp terminals or plug-in connector	40	1.57	40	1.57